June 11, 1935. G. B. GALLASCH 2,004,808

DIAGNOSTIC INSTRUMENT

Filed Feb. 24, 1934

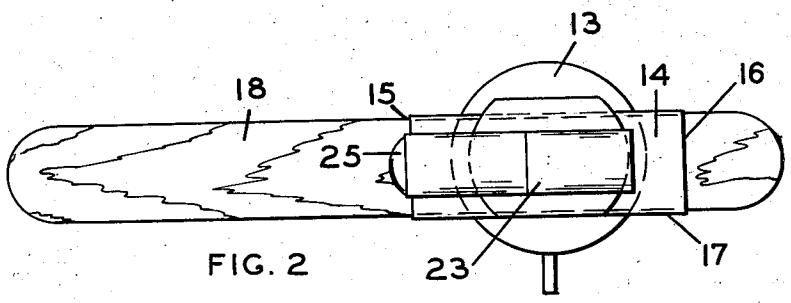

FIG. 2

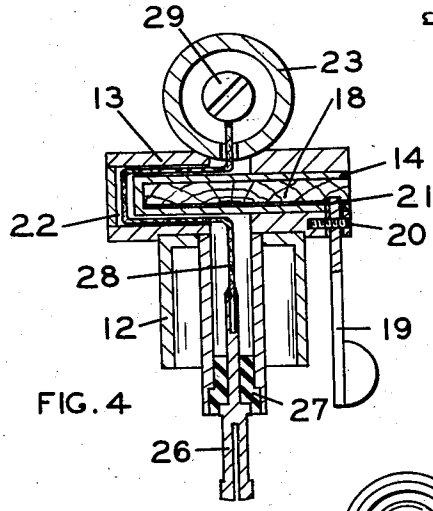

FIG. 4

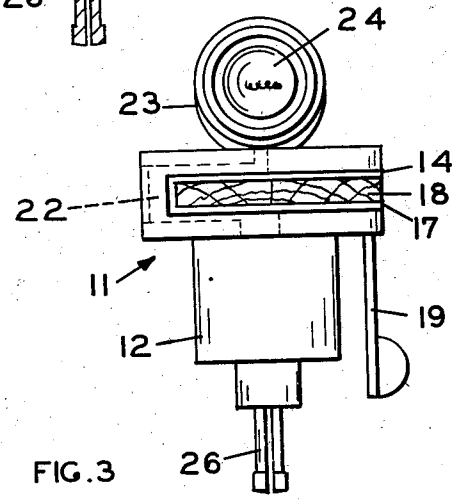

FIG. 3

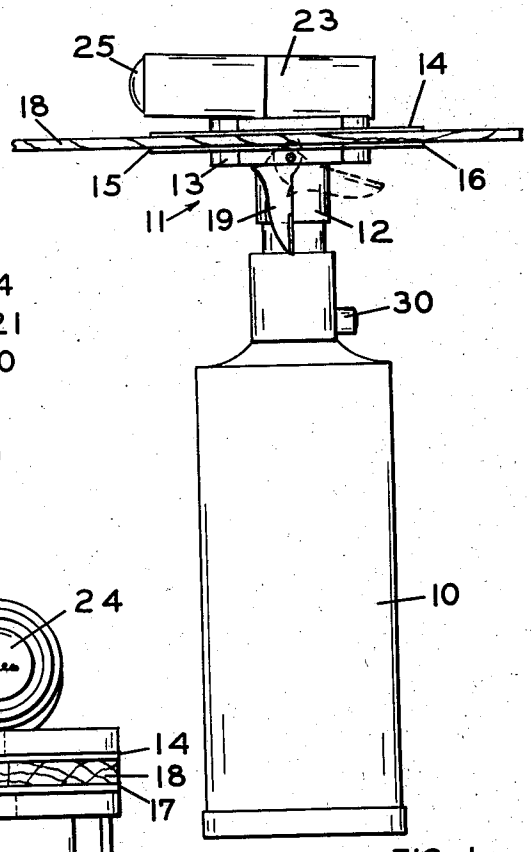

FIG. 1

GEORGE B. GALLASCH
INVENTOR

BY G. A. Ellestad
ATTORNEY

Patented June 11, 1935

2,004,808

UNITED STATES PATENT OFFICE

2,004,808

DIAGNOSTIC INSTRUMENT

George B. Gallasch, Rochester, N. Y., assignor to Bausch & Lomb Optical Company, Rochester, N. Y., a corporation of New York

Application February 24, 1934, Serial No. 712,776

5 Claims. (Cl. 128—16)

This invention relates to diagnostic instruments and more particularly it has reference to instruments which can be used for examining the mouth and throat.

One of the objects of my invention is to provide an improved instrument of the type described. Another object is to provide a diagnostic instrument having improved means for detachably holding a blade. A further object is to provide a diagnostic instrument of the type described having a source of illumination and improved blade holding means whereby convenience in use and ease of manipulation are afforded. These and other objects and advantages reside in certain novel features of construction, arrangement and combination of parts as will hereinafter be more fully described and pointed out in the appended claims.

Referring to the drawing:

Fig. 1 is a side view of a diagnostic instrument embodying my invention.

Fig. 2 is a top plan view of the head of the instrument.

Fig. 3 is an end view of same.

Fig. 4 is a vertical sectional view of same.

A preferred embodiment of my invention is illustrated in the drawing wherein 10 indicates the usual type of handle carrying a battery, not shown, which supplies electrical energy to the head of the instrument indicated generally at 11. The head comprises a tubular member 12 which carries a flat U-shaped member 13 having a laterally disposed opening in which is secured a flat tube 14 which is open at its two ends 15 and 16 and along one side 17. The flat tube 14 is adapted to receive a tongue depressor blade such as shown at 18. A lever 19 pivotally mounted on member 13 at 20 has a cam end 21 which is adapted to be forced against the bottom of blade 18 so as to selectively lock the blade in position. The blade 18 is usually made of soft wood so that the cam end 21 of lever 19 may be forced into the under side of the blade. The blade 19 could also be made of metal or any other suitable material.

The member 13 has an internal passageway 22 which extends from under the tube 14 around its closed edge and up to the top of tube 14. Secured to the top of member 13 is a casing 23 which carries an incandescent lamp 24 positioned to direct light rays through lens 25 along the axis of blade 18. Electric current is supplied to the lamp 24, from the battery in handle 10, by means of the conductor 26 insulated at 27 and the connecting insulated wire 28 which passes through passageway 22 up to the contact 29 against which lamp 24 is positioned. The other side of the circuit is formed by the casing as is usual in such devices. A switch 30 provides means for controlling the circuit. Since the connections between the head and the battery and switch form no part of the present invention the details of structure are not shown.

From the foregoing it will be apparent that I am able to attain the objects of my invention and provide an improved diagnostic instrument. The wooden blades are generally received by the physician in a sterilized condition and hence that portion of the blade which is to be placed in contact with the tongue should not be handled. With my instrument, the blade can readily be inserted laterally so that a minimum amount of handling is necessary. Since the end 16 of tube 14 is open the blade can be moved longitudinally towards the rear in order to provide the desired length blade to be used on the tongue. The blade fits freely into tube 14 so that when the physician unlocks the blade, by turning lever 19 to the dotted line position of Fig. 1, a used blade can be readily ejected into a waste receptacle without handling the blade. When the blade is locked in position it is held tightly against the top and side wall of tube 14 so that the blade is rigid and free from wobble in any direction. Blades of different widths can be accommodated. Various modifications can obviously be made without departing from the spirit of my invention.

I claim:

1. A diagnostic instrument comprising a member having an opening providing a guideway adapted to receive a tongue depressor blade, said guideway being open on three sides whereby said blade may be inserted in said guideway either laterally or longitudinally and means for selectively locking the blade in the guideway.

2. A diagnostic instrument comprising a member having a longitudinal guideway adapted to receive a tongue depressor blade, said guideway being open on three sides, a lever pivotally mounted on said member, said lever having a cam end adapted for selective engagement with said blade to lock the blade in said guideway.

3. A diagnostic instrument comprising a member having an opening providing a guideway adapted to receive a tongue depressor blade, said opening having top and bottom walls and a side wall, a light source mounted above said guideway and concealed means carried by said member around said guideway for conducting electrical

current to said source from a point directly below said guideway.

4. An instrument of the type described comprising a U-shaped member having a laterally disposed opening providing a guideway adapted to receive a blade, a light source mounted above said guideway, said member having a passage around the closed portion of said U-shaped member and means within said passage for conducting electric current to said source.

5. A diagnostic instrument comprising a U-shaped member having a laterally disposed opening providing a guideway adapted to receive a blade, a light source carried by said member above the guideway, said member having an internal passageway around the closed portion of said U-shaped member, an insulated conductor in said passageway for conducting electric current from a point below said member to said source, and a pivoted lever mounted on said member, said lever having an end portion adapted to engage said blade for selectively locking the blade in said guideway.

GEORGE B. GALLASCH.