United States Patent [19]

Fujiyama et al.

[11] **Patent Number: Des. 288,093**

[45] **Date of Patent: ** Feb. 3, 1987**

[54] **FACSIMILE TRANSCEIVER**

[75] Inventors: **Yoshiyuki Fujiyama; Hidemi Watanabe; Toshihiro Kumano; Minoru Terakado; Yoshitatsu Okiyama,** all of Nagano, Japan

[73] Assignee: **Matsushita Graphic Communications Systems Inc.,** Japan

[**] Term: **14 Years**

[21] Appl. No.: **619,241**

[22] Filed: **Jun. 11, 1984**

[30] **Foreign Application Priority Data**

Feb. 6, 1984 [JP] Japan 59-4015

[52] **U.S. Cl.** **D14/94;** D16/31

[58] **Field of Search** D14/1, 94, 99, 93, 95; D16/27, 30, 31; 358/256, 286

[56] **References Cited**

U.S. PATENT DOCUMENTS

D. 221,356	8/1971	Penney	D16/31
D. 263,708	4/1982	Matsumoto et al.	D14/94
D. 268,580	4/1983	Matsumoto et al.	D14/94
D. 270,538	9/1983	Yasutani	D16/30
D. 272,153	1/1984	Shintani et al.	D14/94

FOREIGN PATENT DOCUMENTS

586948 11/1982 Japan .

Primary Examiner—Charles A. Rademaker
Assistant Examiner—Theodore M. Shooman
Attorney, Agent, or Firm—Sughrue, Mion, Zinn, Macpeak, and Seas

[57] **CLAIM**

The ornamental design for a facsimile transceiver, as shown.

DESCRIPTION

FIG. **1** is a front, top and right side perspective view of a facsimile transceiver showing our new design;
FIG. **2** is a rear, top and left side perspective view thereof;
FIG. **3** is a front elevational view thereof;
FIG. **4** is a top plan view thereof;
FIG. **5** is a left side elevational view thereof;
FIG. **6** is a rear elevational view thereof;
FIG. **7** is a bottom plan view thereof; and
FIG. **8** is a right side elevational view thereof.

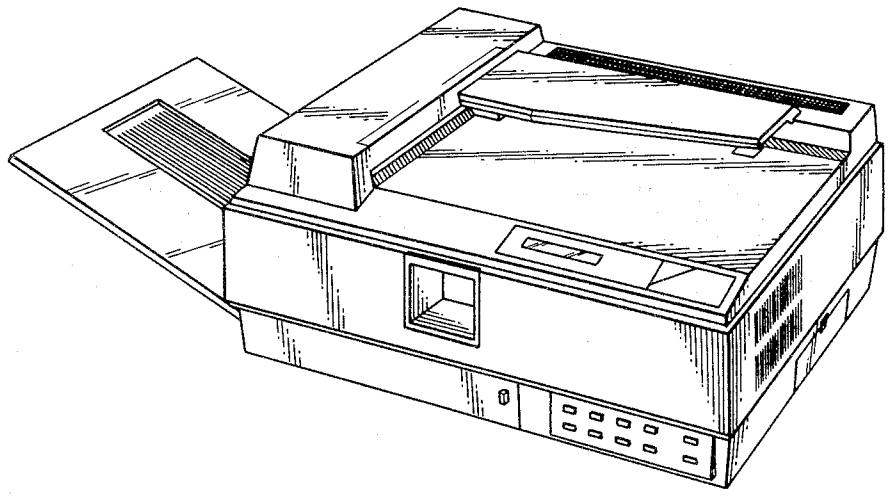

Fig. 1

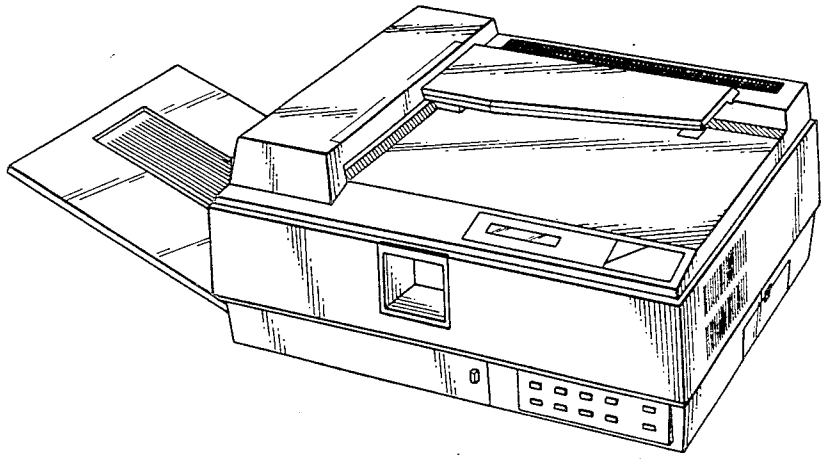

Fig. 2

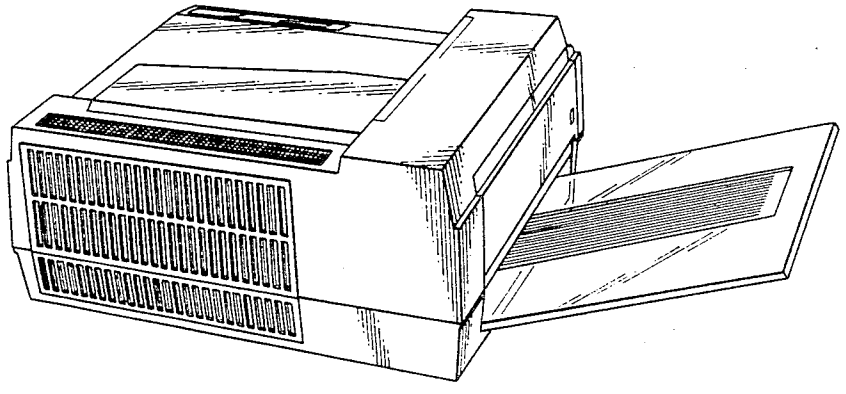

Fig. 3

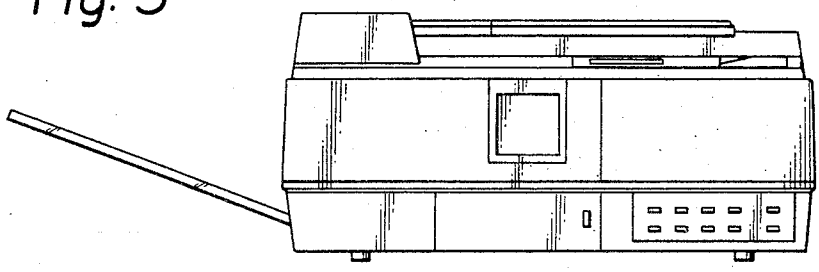

Fig. 4

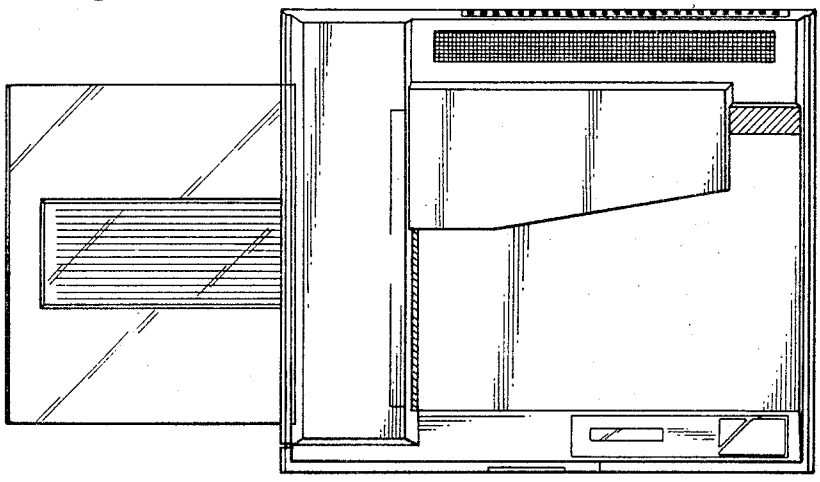

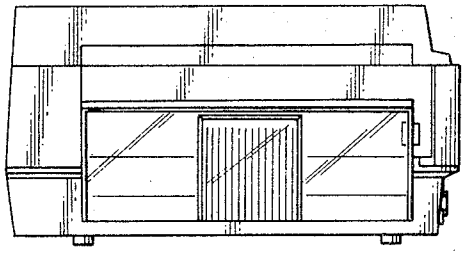

Fig. 5

Fig. 6

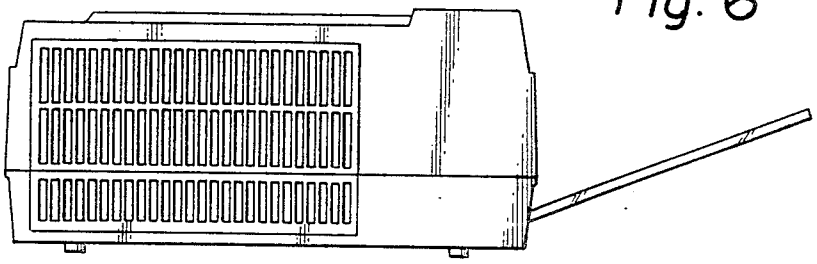

Fig. 7

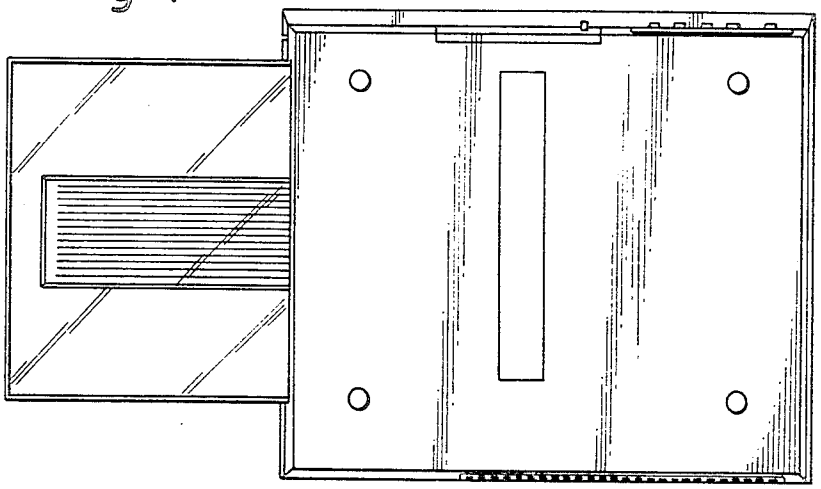

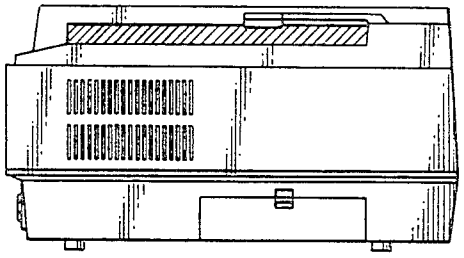

Fig. 8