(CONVENTION. By one or more persons and/or a Company.) Form 4

20177/88

60419

COMMONWEALTH OF AUSTRALIA

Patents Act 1952-1969

CONVENTION APPLICATION FOR A PATENT

ACCEPTED AND

25-7-90

(1) Here insert (in full) Name or Names of Applicant or Applicants, followed by Address (es).

We (1) DRAGERWERK AKTIENGESELLSCHAFT

of Moislinger Allee 53-55, D-2400 Lubeck, Federal Republic of Germany

hereby apply for the grant of a Patent for an invention entitled: (2)

(2) Here insert Title of Invention.

CHEMICAL OXYGEN GENERATOR

(3) Here insert number(s) of basic application(s)

which is described in the accompanying complete specification. This application is a Convention application and is based on the application numbered (3)

P37 25 105.8

(4) Here insert Name of basic Country or Countries, and basic date or dates

for a patent or similar protection made in (4) Federal Republic of Germany on 29th July 1987

Our address for service is Messrs. Edwd. Waters & Sons, Patent Attorneys, 50 Queen Street, Melbourne, Victoria, Australia.

DATED this 29th day of July 19 88

(5) Signature (s) of Applicant (s) or Seal of Company and Signatures of its Officers as prescribed by its Articles of Association.

(5) DRAGERWERK AKTIENGESELLSCHAFT

by

Ian A. Scott

Registered Patent Attorney

To:

THE COMMISSIONER OF PATENTS.

(CONVENTION. Company.) Form 8

COMMONWEALTH OF AUSTRALIA

Patents Act 1952-1969

DECLARATION IN SUPPORT OF A CONVENTION APPLICATION FOR A PATENT OR PATENT OF ADDITION

(1) Here insert (in full) Name of Company.

In support of the Convention Application made by(1) DRAGERWERK AKTIENGESELLSCHAFT

(hereinafter referred to as the applicant) for a Patent

(2) Here insert title of Invention.

for an invention entitled:(2) CHEMICAL OXYGEN GENERATOR

(3) Here insert full Name and Address, of Company official authorized to make declaration.

Dr. Harald Helmreich, Dr. Peter Naumann

I,(3) of Drägerwerk Aktiengesellschaft Moislinger Allee 53-55 of D-2400 Lübeck

do solemnly and sincerely declare as follows:

1. I am authorised by the applicant for the patent to make this declaration on its behalf.

2. The basic application as defined by Section 141 of the Act was made in(4) Federal Republic of Germany on the 29th day of July 19 87, by DRAGERWERK AKTIENGESELLSCHAFT on ~~the XXXXX day of XXXXX XXXXXXXX~~

(4) Here insert basic Country or Countries followed by date or dates and basic Applicant or Applicants.

(5) Here insert (in full) Name and Address of Actual Inventor or Inventors.

3.(5) ERNST GUNTHER KOLPE, Hansestr. 112, D-2410 Molln, Rainer Ernst, Dorfstr. 21, D-2401 Curau, HANS-BURKHARDT FIEDLER, Steinkamp 27, D-2430 Neustadt/Holst, all in Federal Republic of Germany is/are the actual inventors of the invention and the facts upon which the applicant is entitled to make the application are as follow:

The applicant is the assignee of the said actual inventors

4. The basic application referred to in paragraph 2 of this Declaration was the first application made in a Convention country in respect of the invention the subject of the application.

DECLARED at Lubeck, Germany

this 31st day of August, 1988

(6) Signature.

(6) Dr. Harald Helmreich Dr. Peter Naumann

To: THE COMMISSIONER OF PATENTS.

Edwd. Waters & Sons, Melbourne.

(12) PATENT ABRIDGMENT (11) Document No. AU-B-20177/88
(19) AUSTRALIAN PATENT OFFICE (10) Acceptance No. 602419

(54) Title
CHEMICAL OXYGEN GENERATOR

International Patent Classification(s)
(51)[4] C01B 013/02 A62B 021/00 A62D 009/00

(21) Application No. : 20177/88 (22) Application Date : 29.07.88

(30) Priority Data

(31) Number (32) Date (33) Country
3725105 29.07.87 DE FEDERAL REPUBLIC OF GERMANY

(43) Publication Date : 02.02.89

(44) Publication Date of Accepted Application : 11.10.90

(71) Applicant(s)
DRAGERWERK AKTIENGESELLSCHAFT

(72) Inventor(s)
ERNST GUNTHER KOLBE; HANS-BURKHARDT FIEDLER

(74) Attorney or Agent
WATERMARK PATENT & TRADEMARK ATTORNEYS, Locked Bag 5, HAWTHORN VIC 3122

(56) Prior Art Documents
WO 89/02413
DE 3039442
US 3868225

(57) Claim

1. A chemical oxygen generator comprising:

a cartridge-like housing having first and second ends;

a close-packed charge of chemical pellets disposed in said housing between said ends, said pellets being made of a chemical mixture including an alkali-metal chlorate;

an ignition device mounted at said first end for initiating a chemical reaction in said charge to release the oxygen;

oxygen outlet means formed at said second end for passing the oxygen generated in said chemical reaction from said housing; and,

said pellets being packed in said housing such that mutually adjacent pellets contact each other at the smallest possible surface contact area to facilitate the transmission of the ignition from one pellet to the next.

3. The chemical oxygen generator of claim 1, which

.../2

includes compression means for applying a biasing force to said charge to increase the contact pressure at said contact interfaces between said pellets.

4. The chemical oxygen generator of claim 1 in which the charge is subdivided into a plurality of zones, each of said zones containing a plurality of pellets having a reaction velocity different from the reaction velocity of the pellets contained in the next adjacent zone.

Form 10

COMMONWEALTH OF AUSTRALIA

PATENTS ACT 1952-69

COMPLETE SPECIFICATION

(ORIGINAL)

Class Int. Class

Application Number:
Lodged:

602419

Complete Specification Lodged:
Accepted:
Published:

Priority:

Related Art:

This document contains the amendments made under Section 49 and is correct for printing.

Name of Applicant: DRAGERWERK AKTIENGESELLSCHAFT

Address of Applicant: Moislinger Allee 53-55, D-2400 Lubeck, Federal Republic of Germany

Actual Inventor: ERNST GUNTHER KOLBE, RAINER ERNST and AND HANS-BURKHARDT FIEDLER

Address for Service: EDWD. WATERS & SONS,
50 QUEEN STREET, MELBOURNE, AUSTRALIA, 3000.

Complete Specification for the invention entitled:

CHEMICAL OXYGEN GENERATOR

The following statement is a full description of this invention, including the best method of performing it known to :- us

Chemical Oxygen Generator

Field of the Invention

The invention relates to a chemical oxygen generator having a chemical mixture based on alkali-metal chlorate, especially sodium chlorate ($NaClO_3$). The chemical mixture constitutes the charge of a cartridge having an ignition device and an oxygen outlet.

Background of the Invention

An oxygen generator of the above kind is disclosed in German published patent application DE-OS 30 39 442.

The known oxygen generators have a charge in the form of a pressed chlorate body which is known as an oxygen candle and which is present either as an individual candle or the charge can be put together from a plurality of individual candles which are connected in series. These candles are accommodated in a housing equipped with heat insulation and an ignition device is provided for igniting the start candle which releases oxygen with the development of heat. The oxygen is conducted to a consumer from an appropriate oxygen outlet.

The pressed chemical mass must not have any hollow spaces or even fissures during its manufacturing process since defects prevent a uniform decomposition during use. In order to assure an uninterrupted supply capability of the released oxygen, care must be taken to ensure that the heat transfer during the advance of the reaction zone to the undecomposed chemical takes place without interruption and that the heat quantity necessary for maintaining the decomposition is maintained during the entire period of use while maintaining the required ignition temperature. It is therefore always necessary that even during transport of manufactured oxygen

generators and even during their use such as an oxygen supply in a breathing protective apparatus not the slightest fissure or crumbling within the pressed chemical mass occurs. This can lead to a condition wherein the unit is unfit for use and which cannot be detected in advance. For this reason, complex protective measures are necessary to protect the chemical cartridge of the known oxygen generator from vibrations.

In those embodiments wherein a plurality of candles are series connected one behind the other, the intermediate spaces which are produced in this manner between the individual candles must be bridged by means of further ignition devices.

The quantity of oxygen provided by the pressed individual candles is dependent upon the quantity of the chemical mass which, however, cannot be increased at will to increase the quantity of oxygen delivered. The pressing tools necessary for this purpose bear no economic relationship to the targeted use. Even connecting ever more individual candles one behind the other has its limitation in the difficulty to control the many ignition transmissions which follow one behind the other in addition to the large configuration which such a unit must have.

Summary of the Invention

It is an object of the invention to provide an oxygen generator of the kind described above which is improved so that the charge is insensitive to shock and can be configured in every desired external form and size. It is a further object of the invention to provide such a chemical oxygen generator wherein the advance of the reaction zone is assured without further supporting means.

According to a feature of the invention, the charge of

the oxygen generator includes a close packed charge or bed of chemical pellets which abut one another with least possible surface contact. In known pressed candle devices where there are fissures or interface surfaces within or between the pressed candles the drain of heat transferring across the relatively large fissure or interface surface contact areas results in an inadequate heating of the candle material to raise the material to the required reaction temperature to maintain the volume of oxygen production. Oxygen production can thus vary significantly and may well cease altogether.

In contrast to the above, in the present invention the reaction heat is maintained in a very small area at an appropriately higher temperature due to the small contact surface area between of each individual pellet. the hot gas generated by the reaction flows over the large surface of the pellets and effects an intensive preheating. With the intimate contact between adjacent pellets at small contact surface area, the ignition is reliably transmitted from one pellet to the next. The pellets lying tightly one next to the other are also insensitive to shock and vibration. Thus a container of any required size can be provided with a charge for producing cartridges capable for more reliably delivering any quantity of oxygen. The form and magnitude of the cartridges are now no longer dependent upon the physical dimensions of pressed candles. A preferred composition of a chemical pellet on the basis of an alkali-metal chlorate comprises:

90 - 97 % sodium chlorate ($NaClO_3$)
0 - 6 % sodium monoxide (Na_2O)
1 - 5 % mica

PATENT OFFICE

0 - 0.5 % silicon

0 - 10 % sodium peroxide (Na_2O_2)

The pellets are preferably tempered for 3 to 20 hours at 100 to 200° C for increasing the resistance to breakage thereof.

It is advantageous to provide a compression means for acting on the chemical pellets in order to ensure resistance to shock and vibration during preparation and to compensate for changes in volume of the chemical pellets during the reaction and thereby assure a permanent intimate contact of the pellets one with another. In this way, the remaining chemical pellets which have not yet decomposed are held in contact to one another during the reaction process notwithstanding the overall volume reduction of the pellets as the reaction proceeds.

It is advantageous to configure the charge in several zones of different reaction speed in order to provde different oxygen supply capacities in different zones. A first zone having a high reaction speed can be advantageously provided by means of a selection of different admixtures of silicon and metal oxides as a catalyst to the chemical mixture. This chemical mixture has a correspondingly higher oxygen supply capacity. This first zone is followed by a further zone having a lower catalyst component in the chemical mixture which has a correspondingly lower reaction speed for providing a reduced oxygen supply capacity.

A further advantageous composition of the chemical charge of the individual pellets includes providing the pellets to have different particle sizes such that additional chemical pellets of smaller particle size are sprinkled over the pellets of larger particle size and settle into the interspaces formed by the pellets of larger particle size. In

IAS:EK(12:51)

AUSTRALIAN PATENT OFFICE

This way, it is possible to increase the density of the charge by means of the smaller pellets. When the cartidge is filled, shaking of the charge in the cartridge can decrease the volume due to a more close packing of the charge. The cartridge therefore may include a compression means which presses the individual pellets against each other thereby assuring the necessary contact surfaces during the chemical reaction. In this context, it can be advantageous to provide the chemical pellets of different particle size with different mixture proportions with respect to their constituents. In this way, a mixture of fast-reacting chemical is obtained in the interspaces of the charge with a slowly reacting chemical as the primary constituent so that the ignition transfer from one pellet to another is still further increased.

Generally, every form of chemical pellet is suitable and especially pellets having an approximately spherical form or pellets having a cylindrical form with end faces which are each configured to be hemispherical. The pellet spheres can be made of layers having different reaction speeds which encase one another (laminated pellets). With these cylindrically-shaped pallets, it is also advantageous to provide alternate layers wherein a layer of fast reaction speed follows a layer of slow reaction speed (multi-layered pallets). With this measure, the effect is achieved that the contact surfaces of the idividual pellets can better transmit the required quantity of heat for igniting the adjoining pellet.

IAS:EK(12:51)

AUSTRALIAN PATENT OFFICE

Brief Description of the Drawings

The invention will now be described with reference to the drawings wherein:

FIG. 1 is an elevation view, in section, of an embodiment of a chemical oxygen generator according to the invention; and,

FIG. 2 is a section view of a multi-layered chemical pellet.

Description of the Preferred Embodiments of the Invention

The chemical oxygen generator shown in FIG. 1 includes a cartridge 1 which is filled with a charge (2a, 2b) of chemical pellets 2 for releasing oxygen. At a first one of its ends, the cartridge 1 has an ignition device 4 and a starter charge 5. At the second end lying opposite the ignition device 4, the cartridge 1 is provided with an outlet base 6 from which the oxygen is released during operation and can be conducted to a consumer (not shown). A permeable base shell 7 is disposed ahead of the outlet base 6 and is attached to the inner wall surface of the cartridge. The permeable base shell 7 supports a pressure spring 8 which acts on a permeable charge base 9 freely movable inside the cartridge 1. The intermediate space between the base shell 7 and the charge base 9 is filled with a dust filter 10.

The chemical pellets 2 are ignited with the aid of the ignition device 4 and the starter charge 5 to operate the oxygen generator with the pellets 2 releasing oxygen while developing heat. The reacting pellets 2 thereby form an advancing reaction front 3 along the charge which leaves a reacted portion 2a of the charge behind and advances into the portion 2b of the charge which has not yet reacted. Oxygen is

released during this process and passes through the permeable charge base 9, the dust filter 10 and the permeable base shell 7 to the outlet base 6 from which it can be conducted to a consumer. A reduction in volume is compensated for by the charge base 9 which is displaced as a consequence of the spring force of the pressure spring 8. The dust particles released during the development of the oxygen are held by the dust filter 10.

FIG. 2 shows an individual chemical pellet 2 which comprises a cylindrical center part 22 and two hemispherical end parts 21. The center part 22 includes a chemical having a low reaction speed and the outer parts 21 contain a chemical having a higher reaction speed.

It is understood that the foregoing description is that of the preferred embodiments of the invention and that various changes and modifications may be made thereto without departing from the spirit and scope of the invention as defined in the appended claims.

THE CLAIMS DEFINING THE INVENTION ARE AS FOLLOWS:

1. A chemical oxygen generator comprising:

a cartridge-like housing having first and second ends;

a close-packed charge of chemical pellets disposed in said housing between said ends, said pellets being made of a chemical mixture including an alkali-metal chlorate;

an ignition device mounted at said first end for initiating a chemical reaction in said charge to release the oxygen;

oxygen outlet means formed at said second end for passing the oxygen generated in said chemical reaction from said housing; and,

said pellets being packed in said housing such that mutually adjacent pellets contact each other at the smallest possible surface contact area to facilitate the transmission of the ignition from one pellet to the next.

2. The chemical oxygen generator of claim 1, wherein said alkali-metal chlorate is sodium chlorate ($NaClO_3$).

3. The chemical oxygen generator of claim 1, which includes compression means for applying a biasing force to said charge to increase the contact pressure at said contact interfaces between said pellets.

4. The chemical oxygen generator of claim 1 in which the charge is subdivided into a plurality of zones, each of said zones containing a

IAS:EK(12:51)

AUSTRALIAN PATENT OFFICE

plurality of pellets having a reaction velocity different from the reaction velocity of the pellets contained in the next adjacent zone.

5. The chemical oxygen generator of claim 4, wherein the reaction velocity of the pellets in each of said zones is determined by different admixtures of additives.

6. The chemical oxygen generator of claim 1, said pellets having different particle sizes such that the pellets having a larger particle size conjointly define a plurality of interspaces therebetween; and, the pellets having a smaller particle size settling through and into said interspaces thereby increasing the density of said charge.

7. The chemical oxygen generator of claim 6, said pellets having the smaller particle size containing constituents in a mixture proportion to provide a first reaction velocity and said pellets having the larger particle size containing constituents in a mixture proportion to provide a second reaction velocity slower than said first reaction velocity.

8. The chemical oxygen generator of claim 1, each of said pellets being a multilayered pellet with each two mutually adjacent ones of the layers having respectively different reaction velocities.

9. The chemical oxygen generator of claim 8, one of said layers encasing the other one of said layers.

10. A method of producing an oxygen generator having a cartridge-like housing with a charge of chemical pellets disposed in said housing between the ends of the housing, the generator further including an ignition device at one end thereof and an oxygen outlet at the other end thereof, the method comprising the steps of:

placing a first charge of coarse particle pellets made of a chemical mixture into said housing thereby causing a plurality of interspaces to be formed between said coarse particle pellets;

placing a second charge of fine particle pellets made of a chemical mixture so as to permit the same to settle into and fill out said interspaces; and,

closing said housing and vibrating the latter so as to cause the composite volume of said first and second charges to increase to a volume greater than the original volume of said charge before the vibrating thereof whereby the walls of the cartridge are placed under tension to press said pellets against each other.

11. The method of claim 10, wherein said chemical mixture includes an alkali-metal chlorate.

12. The method of claim 11, wherein said alkali-metal chlorate is sodium chlorate ($NaClO_3$).

DATED this 28th day of July 1988.
DRAGERWERK AKTIENGESELLSCHAFT

EDWD. WATERS & SONS
PATENT ATTORNEYS
50 QUEEN STREET
MELBOURNE. VIC. 3000.

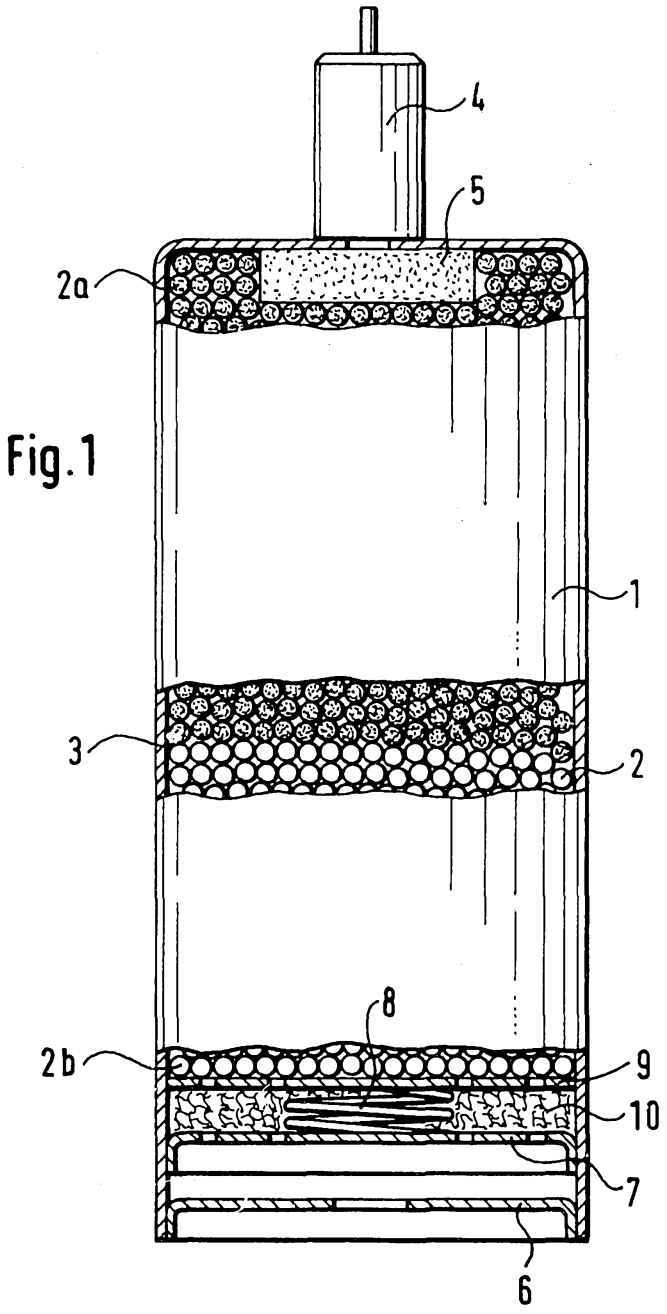

Fig. 1

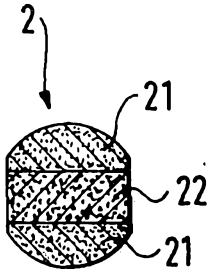

Fig. 2