July 14, 1970 G. FLOWER, JR 3,520,300

SURGICAL SPONGE AND SUCTION DEVICE

Filed March 15, 1967 2 Sheets-Sheet 1

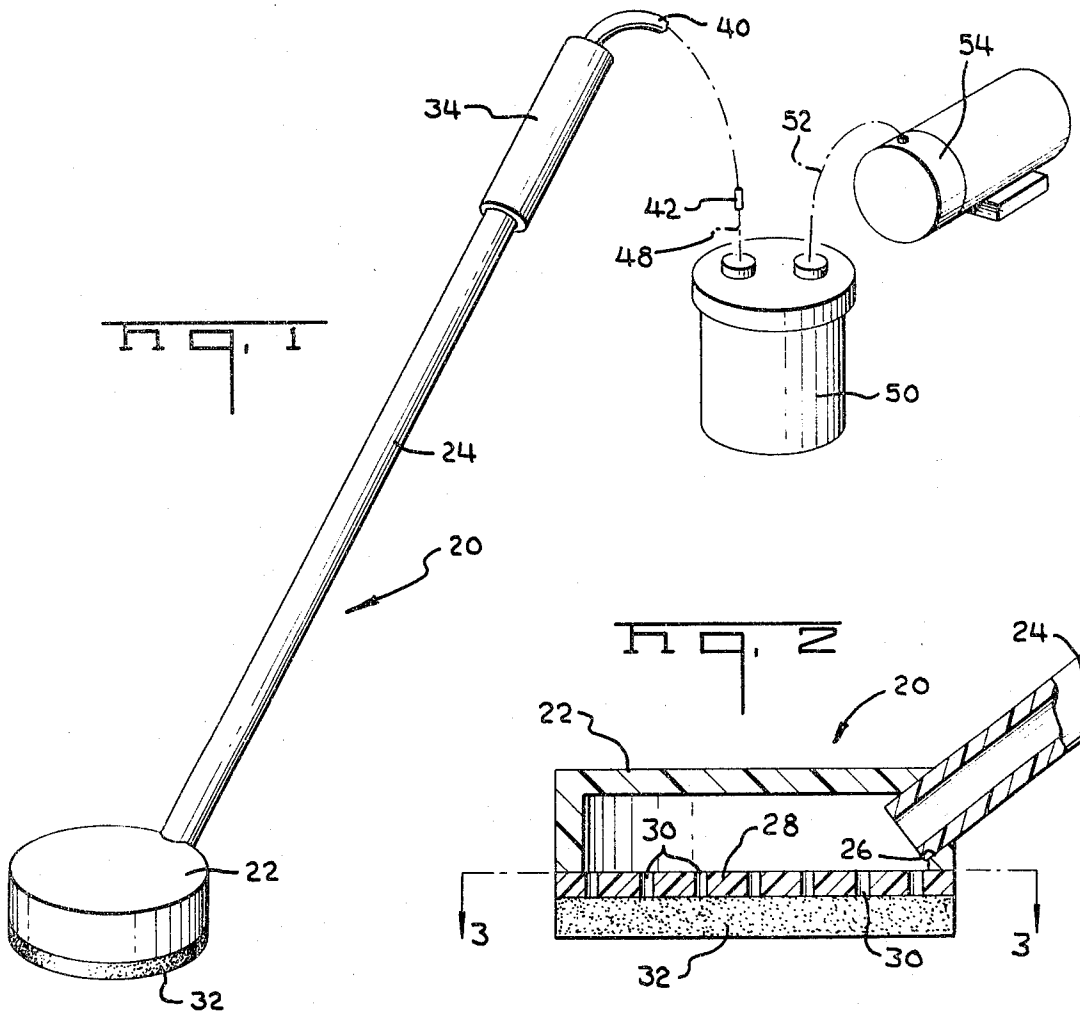

FIG. 1

FIG. 2

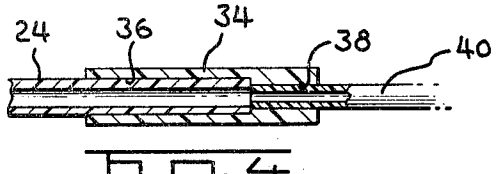

FIG. 4

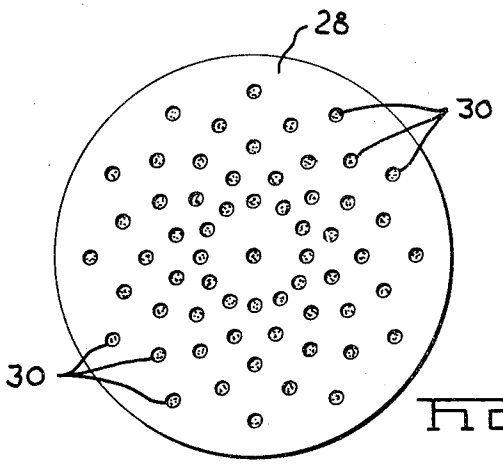

FIG. 3

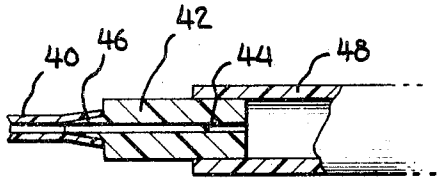

FIG. 5

SURGICAL SPONGE AND SUCTION DEVICE

Filed March 15, 1967 2 Sheets-Sheet 2

Fig. 6

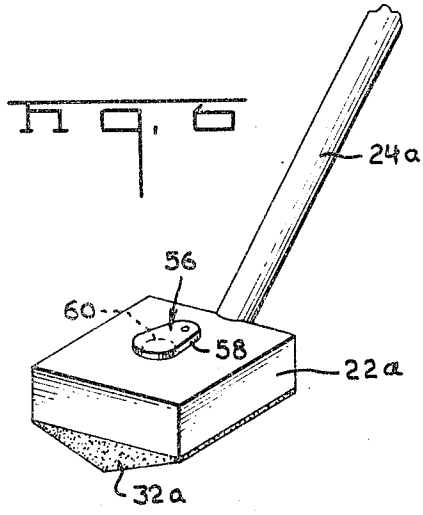

Fig. 7

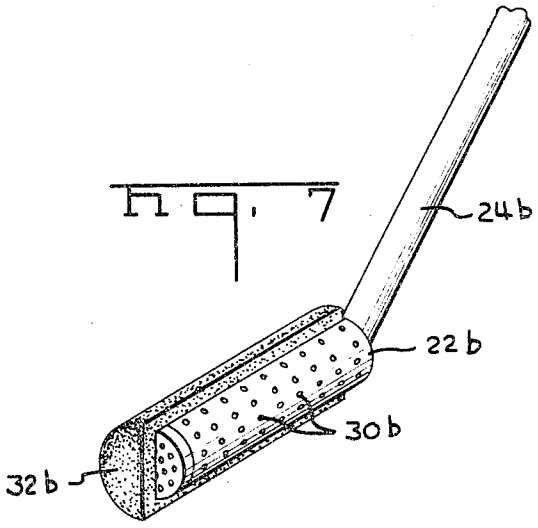

Fig. 8

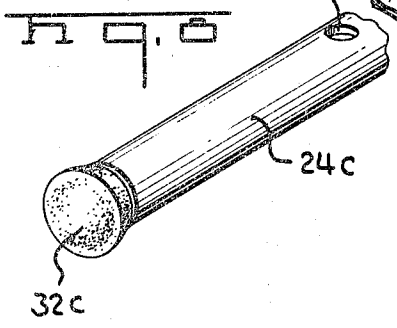

Fig. 9

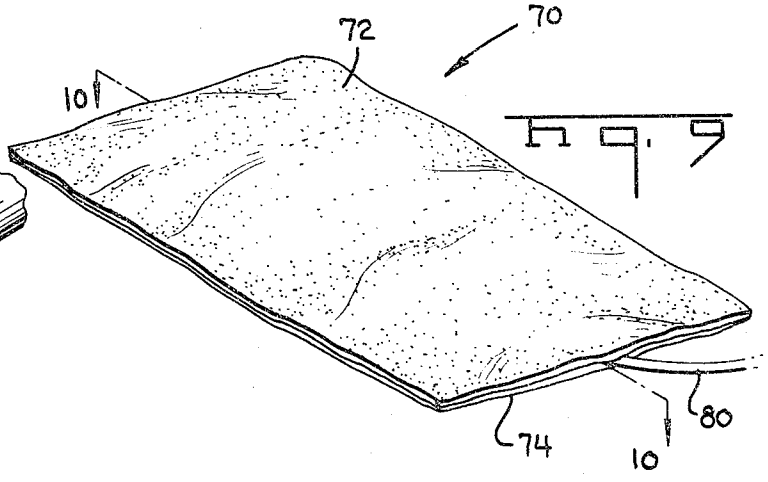

Fig. 10

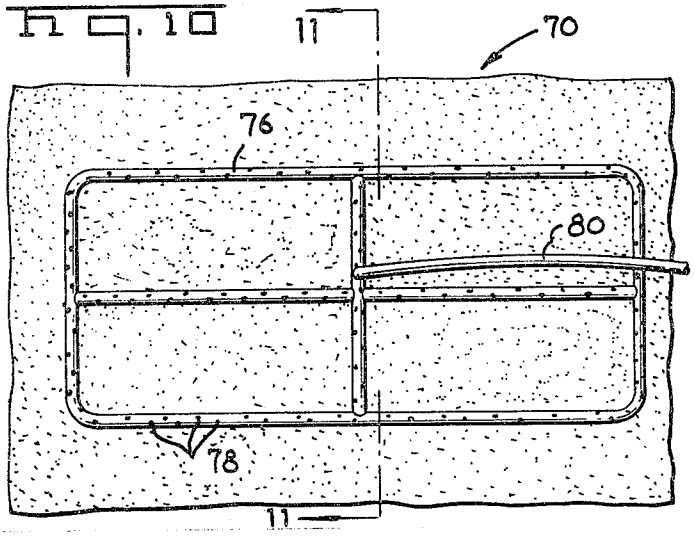

Fig. 11

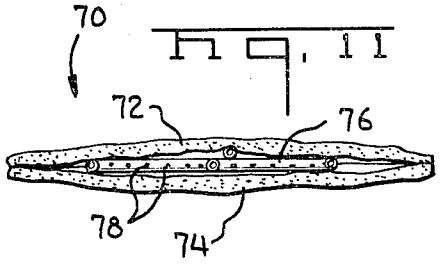

United States Patent Office 3,520,300 Patented July 14, 1970

3,520,300

SURGICAL SPONGE AND SUCTION DEVICE

Guiles Flower, Jr., Carlisle, Pa., assignor to AMP Incorporated, Harrisburg, Pa.

Filed Mar. 15, 1967, Ser. No. 623,391
Int. Cl. A61m 1/00
U.S. Cl. 128—276 2 Claims

ABSTRACT OF THE DISCLOSURE

A device for used during a surgical procedure for removing blood and other liquid matter from a wound. The device is connected to a source of subatmospheric pressure thereby increasing the capacity and use period of the device.

BACKGROUND OF THE INVENTION

Field of the invention

A surgical device for removing blood from a wound or the like.

Description of the prior art

The usual procedure for the removal of blood from a wound or an incision is to place a gauze like material on the exposed area to absorb the blood. These sponges, as they are called, are replaced as soon as they are soaked with blood. The greater the extent of the operation and incision the greater the number of sponges that must be used. The spent sponges, upon removal from the incision, are hung up and counted after the operation to diminish the possibility of sponges being left in the incision after it is closed.

SUMMARY OF THE INVENTION

The present device provides a means whereby a suction source is combined with a sponge to permit thereby a single device to absorb all the necessary blood during a surgical procedure. This is advantageous in that it alleviates the problem of counting numerous sponges at the conclusion of the procedure.

BRIEF DESCRIPTION OF THE DRAWINGS

FIG. 1 is a perspective view showing a preferred embodiment of the present invention;

FIG. 2 is an enlarged cross-sectional view showing details of the head of the device;

FIG. 3 is a view taken along the line **3—3** of FIG. 2 showing further details of the head;

FIG. 4 is a cross-sectional view showing further details of the device of FIG. 1;

FIG. 5 is a cross-sectional view showing details of an adapter for connecting the device of FIG. 1 to a vacuum source;

FIG. 6 is a perspective view of an alternative form of the invention;

FIG. 7 is a perspective view partly broken away showing still another form of the present invention;

FIG. 8 is a perspective view of a further alternative embodiment of the invention;

FIG. 9 is a perspective view of a final alternative form of the invention;

FIG. 10 is a view taken along the line **10—10** of FIG. 9 showing the top cover removed from the device of FIG. 9; and

FIG. 11 is a view taken along the line **11—11** of FIG. 10 showing further details of the device.

DESCRIPTION OF THE PREFERRED EMBODIMENTS

The attainments of the present invention will become apparent to those skilled in the art upon a reading of the following detailed description when taken in conjunction with the drawings in which there are shown and described illustrative embodiments of the invention; it is to be understood, however, that these embodiments are not intended to be exhaustive nor limiting of the invention but are given for purpose of illustration in order that others skilled in the art may fully understand the invention and the principles thereof and the manner of applying it in practical use so that they may modify it in various forms, each as may be best suited to the conditions of a particular use.

The device shown in FIGS. 1 through 5 will now be described in detail. There is shown a device **20** having a head member **22** which is preferably circular but may be of other configurations. An elongated tubular handle member **24** extends from the head member and is secured within an aperture **26** in the head member by means of cement or a press fit or may be molded as an integral part of the head member.

Head member **22** has a lower perforated plate **28** secured thereto, said plate having multiple apertures **30**. Secured to the plate **28** is an absorbent member **32** which is preferably a cellulose base sponge but may be alternatively an absorbent gelatin sponge, a synthetic resin such as foamed polyurethane, or other suitable material.

An adapter means **34** is secured to the distal end of handle member **24**, the member **24** fitting snugly within an aperture **36** in the adapter **34**. A second aperture **38** is disposed within the adapter and is coaxial with the aperture **36**, the aperture **38** serving to receive and frictionally hold therein the end of an elongated flexible tube **40**. The handle **24** will normally be held by a surgeon during use and the tube **40** will extend from the handle a suitable distance to a location remote from the operating table whereat a source of subatmospheric pressure is available.

A second adapter **42** is provided and has an aperture **44** extending entirely therethrough. A nipple **46** is formed on the end of the adapter and is receivable within the end of the tube **40**. The opposite end of the adapter **42** is receivable within the end of a tube **48** leading into a liquid trap **50**. A further tube **52** extends from the trap **50** and and leads to a suction pump **54** suitably located within the hosiptal or other facility wherein the device is used.

When the device **20** is to be used during the course of a surgical procedure the pump **54** will be actuated, causing a suction force to be applied to the surface of the absorbent member **32**. While grasping the handle member **24**, the operator will move the device along the wound or incision causing the material **32** to absorb the blood or other liquid matter and such blood or liquid matter will be removed from the material **32** up through the apertures **30** in the plate **28** and finally will be drawn through the tubes into the liquid trap **50**. The liquid will be collected in the trap **50** to be subsequently disposed of. To protect against the danger of coagulation of the blood within the member **32** and in the head member **22**, there is preferably provided an anti-coagulant means which may impregnate the member **32** and be disposed within the head member. Various anti-coagulant means are suitable for this purpose and include sodium citrate, sodium heparin, sodium warfarin and bishydroxycoumarin.

Further, to insure the continued satisfactory operation of the device it is desirable to line the head member **22** and/or the handle member **24** with a polymeric organic silicon compound which would prevent the adherence of blood or other liquid matter to the parts of the device and thereby keep all of the passageways clear so that the subatmospheric pressure is maintained for an extended period of time.

FIG. 6 illustrates an alternative embodiment of the device of FIG. 1. The handle member **24***a* of the device may be inserted into the adapter **34** shown in FIG. 1 to

thereby replace the device of FIG. 1 with the device of FIG. 6. Handle **24***a* leads into a head member **22***a* similar to the head member **22** previously described. The absorbent member **32***a* is similar to member **32** with the exception that member **32***a* has a generally triangular cross-sectional configuration, such configuration being advantageous for use in certain specific areas of the body and types of incisions. Included in the device of FIG. 6 is a valve means **56** which includes a pivotable cover member **58** and an aperture **60** formed in the top surface of head member **22***a*. With the cover **56** in the position shown in FIG. 6, suction will be applied through the absorbent member **32***a* as previously described. However when cover **56** is pivoted to a position wherein it no longer overlies the aperture **60** then the suction will be destroyed through the member **32***a*. It may be desirable to periodically remove suction from the member **32***a* in order to avoid removal of more blood than is necessary. Also it may occur that the body tissue will adhere to the member **32***a* and be held thereby the suction force, in which case the operator would wish to immediately remove the suction from the member and thereby free the flesh.

In FIG. 7 a further alternative embodiment is shown and comprises a handle member **24***b* leading to a head member **22***b* which is of cylindrical configuration and contains apertures **30***b* entirely therearound. The absorbent member **32***b* completely surrounds the head member **22***b* whereby the device will function as previously described in connection with the device shown in FIG. 1. The device of FIG. 7 has particular application wherein it is desired to merely place the device in a deep well of blood and allow the device to remain stationary and continually absorb blood from the well.

FIG. 8 shows a still further embodiment and comprises a handle member **24***c* having an absorbent member **32***c* press fitted into the end of the handle. In this embodiment there is no head member and the liquid will be absorbed directly from the member **32***c* through the handle **24***c*. This configuration has particular application in confined areas where there would be insufficient room for a head member or the like shown in FIGS. 1 or 6. The handle **24***c* has an aperture **62** therein which is designed to be covered or uncovered by the operator's finger to thereby act as a valve similar to the valve **56** described in connection with the FIG. 6. It is to be understood that the valve **56** or **62** can be used in connection with the device shown in FIG. 1.

With reference now to FIG. 9 there is shown a device **70** which comprises upper and lower layers **72** and **74** respectively of absorbent material, such material being any of the various types described in connection with the member **32** earlier described. The layers **72** and **74** are adhesively joined around their periphery and enclose a network or grid **76** of tubular configuration having apertures **78** dispersed throughout. Extending from the grid is a tubular member **80** which performs similarly to the tube **40** previously described. The device **70** is generally applicable in situations wherein a large surface of an

incision must be packed in order to keep the entire surface free from blood or other liquid matter. The device is flexible and readily conforms to the shape of the flesh within the wound and the suction applied through the grid **76** maintains the layers **72** and **74** in condition to absorb additional liquid.

It can be seen that various devices have been shown and described, the various modifications having particular use in specific situations but all having in common the constant replenishing of the surface of an absorbent means through the expediency of a source of subatmospheric pressure.

Changes in construction will occur to those skilled in the art and various apparently different modifications and embodiments may be made without departing from the scope of the invention. The matter set forth in the foregoing description and accompanying drawings is offered by way of illustration only. The actual scope of the invention is intended to be defined in the following claims when viewed in their proper perspective against the prior art.

I claim:

1. A device for removing liquid matter from a wound or the like during a surgical procedure comprising tubular means adapted to be connected at a first end thereof to a source of subatmospheric pressure, said tubular means having a second end communicating with a grid means, said grid means comprising a plurality of hollow portions having apertures therein, said hollow portions being placed in a regular geometric array, and absorbent means surrounding said grid means and overlying the apertures thereof, said absorbent means comprising a pair of generally flat, sheet-like layers of material, said layers being disposed on each of opposite sides of said grid means and being adhesively joined to each other, whereby said liquid matter may be absorbed by said absorbent means and removed through said tubular means.

2. A device as set forth in claim **1** further comprising anticoagulant means impregnating said absorbent means for preventing clotting of said liquid matter.

References Cited

UNITED STATES PATENTS

2,601,513	6/1952	Gladstone	128—276
2,644,234	7/1953	Scott	32—33
3,089,492	5/1963	Owens	128—268
3,159,668	12/1964	Rochow	128—214 XR
3,169,528	2/1965	Knox et al.	128—276
3,191,600	6/1965	Everett	128—276
3,221,741	12/1965	Le Veen	128—214
3,319,628	5/1967	Halligan	128—276
3,324,855	6/1967	Heimlich	128—276
3,349,768	10/1967	Keane	128—276

CHARLES F. ROSENBAUM, Primary Examiner

U.S. Cl. X.R.

32—33