(12) INTERNATIONAL APPLICATION PUBLISHED UNDER THE PATENT COOPERATION TREATY (PCT)

(19) World Intellectual Property Organization
International Bureau

(43) International Publication Date
25 August 2005 (25.08.2005)

PCT

(10) International Publication Number
WO 2005/077824 A1

(51) International Patent Classification[7]: C01B 13/02, B01D 53/04, 53/047, A61M 16/10

(21) International Application Number: PCT/JP2005/002671

(22) International Filing Date: 15 February 2005 (15.02.2005)

(25) Filing Language: English

(26) Publication Language: English

(30) Priority Data:
2004-037831 16 February 2004 (16.02.2004) JP

(71) Applicant *(for all designated States except US)*: **TEIJIN PHARMA LIMITED** [JP/JP]; 1-1, Uchisaiwaicho 2-chome, Chiyoda-ku, Tokyo 1000011 (JP).

(72) Inventors; and

(75) Inventors/Applicants *(for US only)*: **TAO, Shinichi** [JP/JP]; c/o Teijin Pharma Limited, 1-1, Uchisaiwaicho 2-chome, Chiyoda-ku, Tokyo 1000011 (JP). **KIMURA, Yoshinobu** [JP/JP]; c/o Teijin Pharma Limited, Tokyo Research Center, 3-2, Asahigaoka 4-chome, Hino-shi, Tokyo 1910065 (JP). **INOMOTO, Satoshi** [JP/JP]; c/o Teijin Pharma Limited, Tokyo Research Center, 3-2, Asahigaoka 4-chome, Hino-shi, Tokyo 1910065 (JP).

(74) Agents: **AOKI, Atsushi** et al.; A. Aoki, Ishida & Associates, Toranomon 37 Mori Bldg., 5-1, Toranomon 3-chome, Minato-ku, Tokyo 1058423 (JP).

(81) Designated States *(unless otherwise indicated, for every kind of national protection available)*: AE, AG, AL, AM, AT, AU, AZ, BA, BB, BG, BR, BW, BY, BZ, CA, CH, CN, CO, CR, CU, CZ, DE, DK, DM, DZ, EC, EE, EG, ES, FI, GB, GD, GE, GH, GM, HR, HU, ID, IL, IN, IS, KE, KG, KP, KR, KZ, LC, LK, LR, LS, LT, LU, LV, MA, MD, MG, MK, MN, MW, MX, MZ, NA, NI, NO, NZ, OM, PG, PH, PL, PT, RO, RU, SC, SD, SE, SG, SK, SL, SY, TJ, TM, TN, TR, TT, TZ, UA, UG, US, UZ, VC, VN, YU, ZA, ZM, ZW.

(84) Designated States *(unless otherwise indicated, for every kind of regional protection available)*: ARIPO (BW, GH, GM, KE, LS, MW, MZ, NA, SD, SL, SZ, TZ, UG, ZM, ZW), Eurasian (AM, AZ, BY, KG, KZ, MD, RU, TJ, TM), European (AT, BE, BG, CH, CY, CZ, DE, DK, EE, ES, FI, FR, GB, GR, HU, IE, IS, IT, LT, LU, MC, NL, PL, PT, RO, SE, SI, SK, TR), OAPI (BF, BJ, CF, CG, CI, CM, GA, GN, GQ, GW, ML, MR, NE, SN, TD, TG).

[Continued on next page]

(54) Title: OXYGEN CONCENTRATING APPARATUS

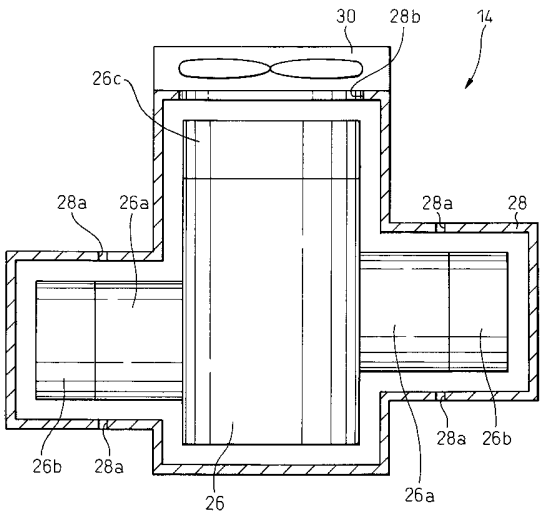

(57) Abstract: An oxygen concentrating apparatus (10) has an oxygen concentrating unit (12), a compressor (26) for supplying compressed air to the oxygen concentrating unit (12) and a compressor housing (28) for accommodating the compressor (26). The compressor housing (28) includes a plurality of air inlet ports (28a) for introducing the air into the compressor housing (28) and an air outlet opening (28b) for discharging the air from the compressor housing (28). A cooling fan (30) is mounted on the compressor housing (28) at the air outlet opening (28b) for drawing the air from the compressor housing (28). The air inlet ports (28a) are disposed adjacent to the side wall of the compressor (26) to direct the air flow induced by the cooling fan perpendicularly to the side wall of the compressor (26). The capacity of the cooling fan (30) and the diameter of the air inlet ports (28a) are selected to ensure the velocity of the air flow through the air inlet ports (28a) is equal to or lower than 15m/sec.

WO 2005/077824 A1

Published:
— *with international search report*

For two-letter codes and other abbreviations, refer to the "Guidance Notes on Codes and Abbreviations" appearing at the beginning of each regular issue of the PCT Gazette.

DESCRIPTION

OXYGEN CONCENTRATING APPARATUS

TECHNICAL FIELD

The present invention relates to an oxygen concentrating apparatus including a cooling device for a compressor which supplies compressed air to a plurality of adsorption columns filled with an adsorbent such as zeolite.

BACKGROUND ART

Oxygen inhalation therapy has been employed as a most effective method of treatment for respiratory system diseases such as asthma, pulmonary emphysema or chronic bronchitis. In oxygen inhalation therapy, an oxygen concentrated gas is supplied to the patient. For this purpose, package-type oxygen concentrating apparatuses have been developed for use in the home. The package-type oxygen concentrating apparatus includes an oxygen concentrating unit for producing oxygen gas by separating nitrogen gas from the air, a compressor for supplying compressed air to the oxygen concentrating unit and a case for accommodating the oxygen concentrating unit and the compressor in order to insulate the noise. Japanese Unexamined Patent Publications (Kokai) No. 62-140619 and No. 63-218502 disclose examples of such apparatuses.

DISCLOSURE OF THE INVENTION

Recently, some oxygen concentrating apparatus further include a compressor housing, disposed in the case, for accommodating the compressor in order to minimize the noise emission from the apparatus. However, the compressor housing prevents the compressor, disposed therein, from being cooled.

Therefore, the objective of the invention is to provide an oxygen concentrating apparatus improved to

efficiently cool the compressor disposed in the compressor housing while an increase in the weight of the apparatus is minimized.

According to the invention, there is provided an oxygen concentrating apparatus which comprises an oxygen concentrating unit, including an adsorption column filed with an adsorbent material which selectively adsorbs nitrogen gas more than oxygen gas, a compressor for supplying compressed air to the oxygen concentrating unit, a compressor housing for accommodating the compressor, the compressor housing including a plurality of air inlet ports for introducing the air into the compressor housing and an air outlet opening for discharging the air from the compressor housing, a cooling fan mounted on the compressor housing at the air outlet opening for drawing the air from the compressor housing and the air inlet ports being disposed adjacent the side wall of the compressor to direct the air flow induced by the cooling fan perpendicularly to the side wall of the compressor. The capacity of the cooling fan and the diameter of the air inlet ports are selected to ensure that a velocity of the air flow through the air inlet ports is equal to or lower than 15m/sec.

BRIEF DESCRIPTION OF THE DRAWINGS

Figure 1 is a diagrammatic section of an oxygen concentrating apparatus according to an embodiment of the present invention.

Figure 2 is a diagrammatic section of a compressor used in the oxygen concentrating apparatus shown in Figure 1.

Figure 3 is a block diagram of an experimental apparatus used to determine the effect of the present invention.

Figure 4 is a graph showing experimental results obtained by using the apparatus of Figure 3.

Figure 5 is a graph showing other experimental

results obtained by using the apparatus of Figure 3.

Figure 6 is a graph showing other experimental results obtained by using the apparatus of Figure 3.

Figure 7 is a graph showing other experimental results obtained by using the apparatus of Figure 3.

BEST MODE FOR CARRYING OUT THE INVENTION

With reference to Figures 1 and 2, a preferred embodiment of the present invention will be described below.

An oxygen concentrating apparatus 10 according to the embodiment of the invention includes an oxygen concentrating unit 12, a compressor unit 14 for supplying the compressed air to the oxygen concentrating unit 12, a tank 16 for containing the oxygen concentrated gas from the oxygen concentrating unit 12, a battery as an electric power source 18 for the oxygen concentrating unit 12 and the compressor unit 14, electric circuit boards 20 and 22 for controlling the oxygen concentrating unit 12 and the compressor unit 14, and a case 24 accommodating all of the above elements 12-22. The oxygen concentrating apparatus 10 further includes a plurality of conduits or pipes (not shown) for fluidly connecting the oxygen concentrating unit 12, the compressor unit 14 and the tank 16. The case 24 includes an air inlet opening 24a, through which the air is introduced into the case 24, and a gas outlet opening 24b through which the nitrogen gas, separated from the air by the oxygen concentrating unit 12, is exhausted.

Preferably, the oxygen concentrating unit 12 may comprise a pressure swing type gas separator. In this particular embodiment, the oxygen concentrating unit 12 includes a plurality of adsorption columns 12a filled with an adsorbent such as zeolite which selectively adsorbs nitrogen gas more than oxygen gas. The oxygen concentrating unit 12 further includes switching mechanisms 12b and 12c for sequentially selectively

switching the adsorption columns to which the air is supplied from the compressor unit 14, and the adsorption columns from which the absorbed nitrogen is released, for regeneration of the adsorbent so that the respective adsorption columns repeatedly absorb nitrogen gas and release the absorbed nitrogen gas according to an absorption-regeneration cycle.

With reference to Figure 2, the compressor unit 14 includes a compressor 26, a compressor housing 28, made of a suitable material, for example, a synthetic resin, such as NBR (acrylonitrile-butadiene rubber), to accommodate the compressor 26 and to provide noise insulation, and a cooling fan 30. The housing 28 has a foamed polyurethane linear attached to the inner surface thereof as a noise insulating material. The compressor 26 may comprise any type of compressor, such as a reciprocating compressor and a rotary compressor. In the embodiment of Figure 2, the compressor 26 is a reciprocating compressor and is, for example, a Horizon Model 2250 pressure/vacuum pump, available from Rietschle Thomas, 7222-T Parkway Dr., Hanover, MD. The compressor has cylinders 26a within which pistons (not shown) are slidably disposed, cylinder heads 26b attached to the ends of the cylinders 26a and a diving motor 26c. The output shaft of the driving motor 26c is connected to a crank shaft (not shown) to which the pistons are connected through connection rods so that the rotation of the driving motor 26c is transformed to the reciprocation of the pistons.

The compressor housing 28 preferably has a configuration similar to the exterior configuration of the compressor 26 to efficiently pass the air along the surface of the compressor 26. The compressor housing 28 includes a plurality of air inlet ports 28a, an air outlet opening 28b and at least side walls facing the cylindrical side walls of the cylinders 26a and defining the inlet ports 28a. A cooling fan 30 is mounted on the

compressor housing 28 at the air outlet opening 28b. In this particular embodiment, the housing 28 includes twenty-eight (28) air inlet port 28a having diameter of 6mm. The air inlet ports 28a are disposed around the cylinders 26a to direct the air flow, induced by the cooling fan 30, through the air inlet ports 28a perpendicularly to the outer surfaces of the cylinders 26a adjacent the ends thereof where the temperature of the air in the cylinders 26a is increased by the compression of the air and the friction between the pistons and the inner surfaces of the cylinders 26a. This configuration allows the air flow to impinge against the outer surfaces of the cylinders 26a and to increase the cooling effect of the air flows. The air introduced into the compressor housing 28 through the air inlet ports 28a is exhausted into the case 24 through the air outlet opening 28b.

With reference to Figures 3-7, the effect of the present invention will be described below.

Figures 4-7 are graphs showing experimental results obtained by using the apparatus of Figure 3. In Figure 3, an experimental apparatus 100 has a dummy compressor unit 110 and a vacuum pump 120 fluidly connected to the dummy compressor unit 110 through a conduit 122. The dummy compressor unit 110 includes a heater unit 112, having a cylindrical exterior configuration and thermal output of 75W, for demonstrating the heat generation in the compressor 26, a hollow cylindrical housing for accommodating the heater unit 112 and a pressure gauge 118 for detecting the pressure in the housing. A plurality of air nozzles 116, in particular twenty-eight (28) nozzles 116, for directing cooling air perpendicularly to the outer surface of the heater unit 112, are disposed in the side wall of the housing 114.

In the conduit 112 between the dummy heater unit 110 and the vacuum pump 120, a valve 124 and a flowmeter 126, for controlling and measuring the flow rate of the air

through the conduit 122, are provided. The experimental apparatus 100 further includes temperature sensors (not shown) for detecting the temperature difference between the outer surface of the heater unit 112 and the room temperature. When the vacuum pump 120 draws the air in the housing 114, the air flow through the nozzles 116 impinges perpendicularly on the outer surface of the heater unit 112 to cool it.

Figure 4 shows the changes in the temperature of the outer surface of the heater unit 112 and the pressure loss through the nozzles 116 relative to the changes in the air flow rate. In this connection, please note that temperature of the outer surface of the heater unit 112 is indicated by the temperature difference ΔT between the outer surface of the heater unit 112 and the room temperature. As shown in Figure 4, the larger the air flow, the more the heater unit 112 is cooled, and the greater the pressure loss through the nozzles 116.

Figure 5 shows the changes in the temperature of the outer surface of the heater unit 112 and the pressure loss through the nozzles 116 relative to the diameter of the nozzles 116. The detailed experimental data in relation to the graph of Figure 5 are shown in Table 1 below.

TABLE 1

Dn (mm)	F (litter/min)	Ta (°C)	Ts (°C)	ΔT (°C)	ΔP (mmH_2O)	V (m/sec)	Re
2	290	21.7	44.9	23.3	207.1	55.0	6108
4	300	22.4	50.3	27.9	13.8	14.2	3159
6	397	22.0	60.0	38.0	1.0	3.5	1564

where

Dn: diameter of the nozzles

F: Air flow rate through the nozzles

Tr: room temperature

Ts: temperature of the outer surface of the heater unit 112

ΔT: Ts-Tr

ΔP: pressure loss through the nozzles

V: flow velocity of the air through the nozzles

Re: Reynolds number

As shown in Figure 5 and Table 1, when the flow velocity of the air is larger than 15m/sec, the pressure loss through the nozzles 116 rapidly and extremely increases. Therefore, according to the invention, diameter of the air inlet ports 28a and the flow rate of the cooling air therethrough are selected so that the flow velocity of the air flow through the air inlet ports 28a is lower than 15m/sec. If the air inlet ports 28a comprise different size ports, the diameter is estimated by the average of the size of each of the ports.

The compressor 26 is cooled by the air induced by the cooling fan 30. The cooling air flow is selected so that the temperature difference ΔT between the temperature Ts of the outer surfaces of the cylinders 26a of the compressor 26 and the room temperature Tr is kept lower than 30°C. As is well known in the art, the higher the power of the compressor, the larger the required flow rate of the cooling air.

Figure 6 shows that there are linear relations between the changes in the power of the compressor and the changes in the flow rate of the cooling air required to maintain the temperature difference ΔT lower than a predetermined value. Two particular cases are shown in Figure 6, one being a case of a temperature difference ΔT lower than 30°C, indicated by line-and-square mark, and the other being a case of a temperature difference ΔT lower than 20°C, indicated by line-and-triangle mark.

Figure 7 shows that there are linear relations between the changes in the power of the compressor and the changes in the flow velocity of the cooling air through the nozzles 116 required to maintain the temperature difference ΔT lower than a predetermined value. Two particular cases are shown in Figure 7, one

being a case of a temperature difference ΔT lower than 30°C, indicated by line-and-square mark, and the other being a case of a temperature difference ΔT lower than 20°C, indicated by line-and-triangle mark.

With reference to Figure 7, the cooling air at 15m/sec maintains the temperature difference ΔT at 30°C, with a compressor of 280W, and at 20°C, with a compressor of 140W, and therefore, can sufficiently cool a compressor which is commonly used for an oxygen concentrating apparatus. These experimental results provide parameters of 0.05m/sec W (ΔT=30°C) and 0.1m/sec W (ΔT=20°C), the flow velocity of the cooling air relative to the power of the compressor.

As described above, the pressure loss becomes excessively high when the velocity of air flow through the nozzles 116 is higher than 15m/sec. On the other hand, sufficient cooling of the compressor allows it to operate for long time. Further, in order to provide a large amount of cooling air, a large cooling fan is required, which will result in increase in the volume, weight, noise and power consumption of the apparatus. Therefore, in order fulfill these conditions, according to the invention, the velocity of the cooling air relative to the power of the compressor is selected to be, or to be larger than, 0.05m/sec W, preferably in a range of 0.05m/sec W - 0.1m/sec W. When a 100W compressor is used, the diameter of the air inlet ports 28 is selected so that the velocity of the cooling air through the air inlet port 28 falls in a range of 5-15m/sec and, preferably, in a range of 5-10m/sec.

CLAIMS

1. An oxygen concentrating apparatus, comprising:

an oxygen concentrating unit, including an adsorption column filed with an adsorbent material which selectively adsorbs nitrogen gas more than oxygen gas;

a compressor for supplying compressed air to the oxygen concentrating unit;

a compressor housing for accommodating the compressor, the compressor housing including a plurality of air inlet ports for introducing the air into the compressor housing and an air outlet opening for discharging the air from the compressor housing;

a cooling fan mounted on the compressor housing at the air outlet opening for drawing the air from the compressor housing; and

the air inlet ports being disposed adjacent the side wall of the compressor to direct the air flow induced by the cooling fan perpendicularly to the side wall of the compressor;

characterized in that the capacity of the cooling fan and the diameter of the air inlet ports are selected to ensure the velocity of the air flow through the air inlet ports is equal to or lower than 15m/sec.

2. An oxygen concentrating apparatus according to claim 1, wherein the capacity of the cooling fan and the diameter of the air inlet ports are selected to ensure that the velocity of the air flow through the air inlet ports relative to the electric power consumption of the compressor is equal to or higher than 0.05m/secW.

3. An oxygen concentrating apparatus according to claim 2, wherein the capacity of the cooling fan and the diameter of the air inlet ports are selected to ensure the velocity of the air flow through the air inlet ports relative to the electric power consumption of the compressor is equal to or lower than 0.1m/secW.

4. An oxygen concentrating apparatus according to any one of the previous claims, wherein the capacity of

the cooling fan is selected to ensure the temperature differences between the air outside of the compressor housing and the outer surface of the compressor is equal to or lower than 30°C.

5. An oxygen concentrating apparatus according to claim 1, wherein the compressor includes a cylinder within which a piston is slidably disposed, a crank shaft, a connecting rod for connecting the piston to the crank shaft, a cylinder head attached to the end of the cylinder and a diving motor, the output shaft of which is connected to the crank shaft so that the rotation of output shaft of the driving motor is transformed to the reciprocations of the pistons; and

the air inlet ports are disposed around the cylinder to direct the air, induced by the cooling fan, through the air inlet ports perpendicularly to the outer surfaces of the cylinder adjacent the ends thereof where the temperature of the air in the cylinder is increased by the compression of the air.

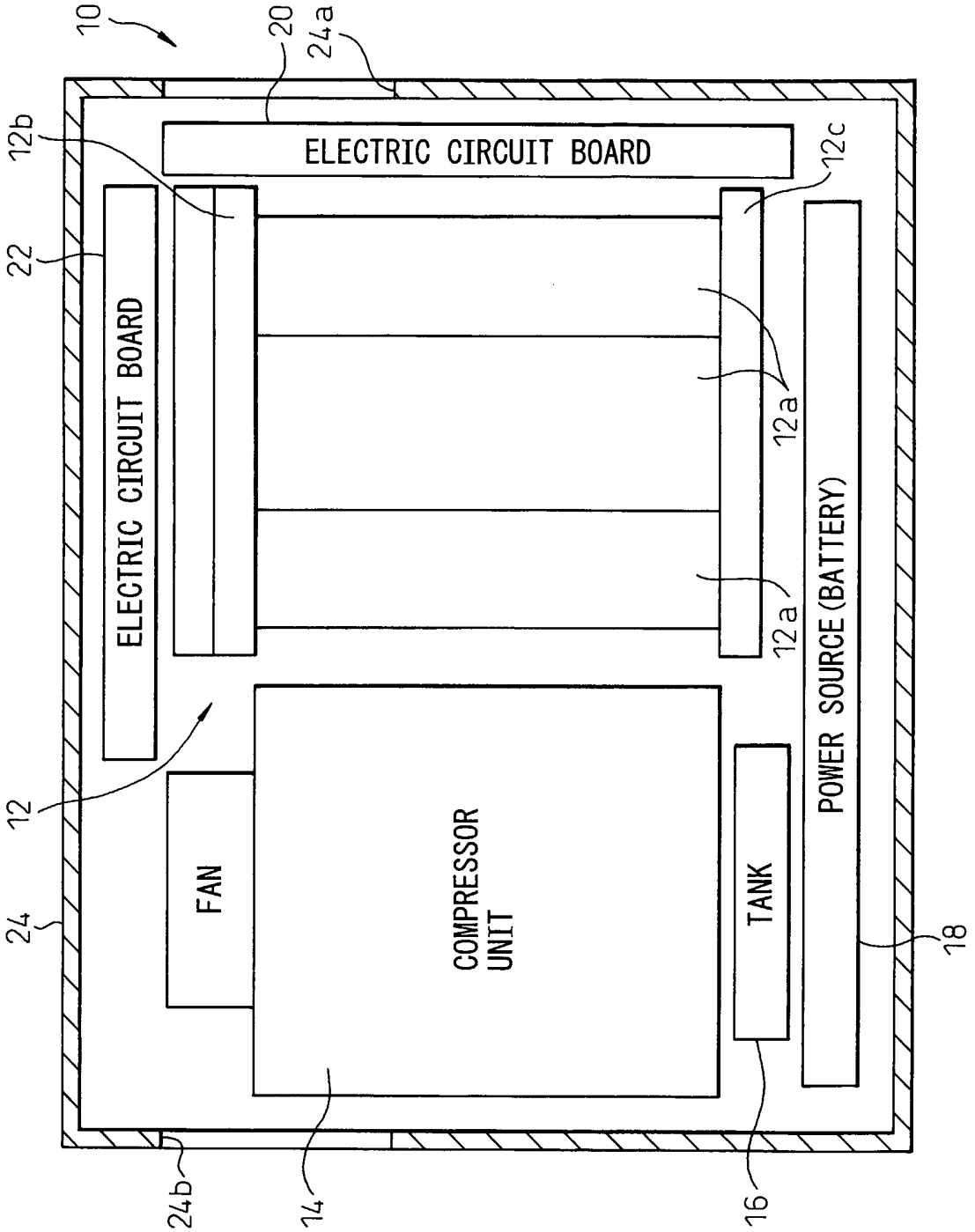
10
20
24a
12b
ELECTRIC CIRCUIT BOARD
12c
22
ELECTRIC CIRCUIT BOARD
12a
12a
POWER SOURCE (BATTERY)
12
FAN
COMPRESSOR UNIT
TANK
24
18
24b
14
16

Fig.1

Fig.2

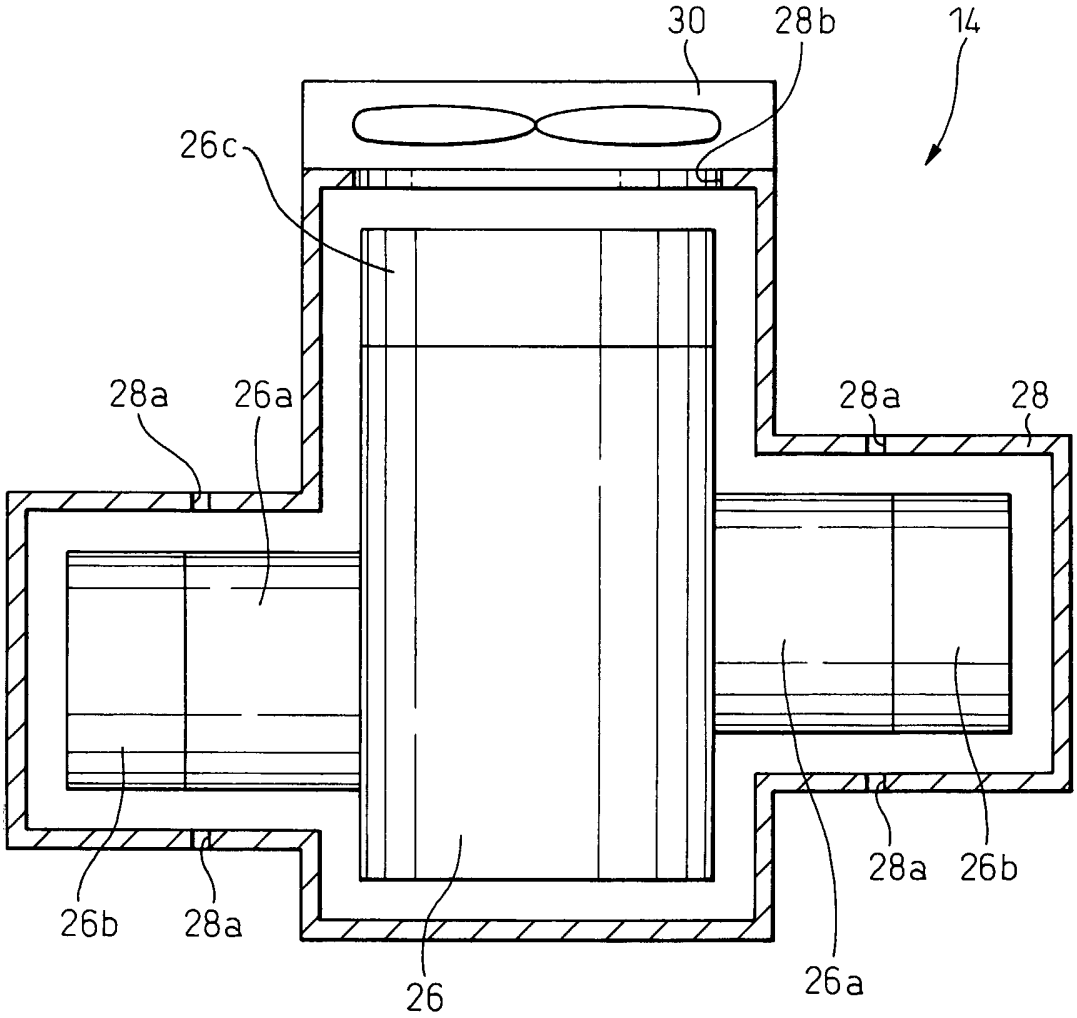

Fig.3

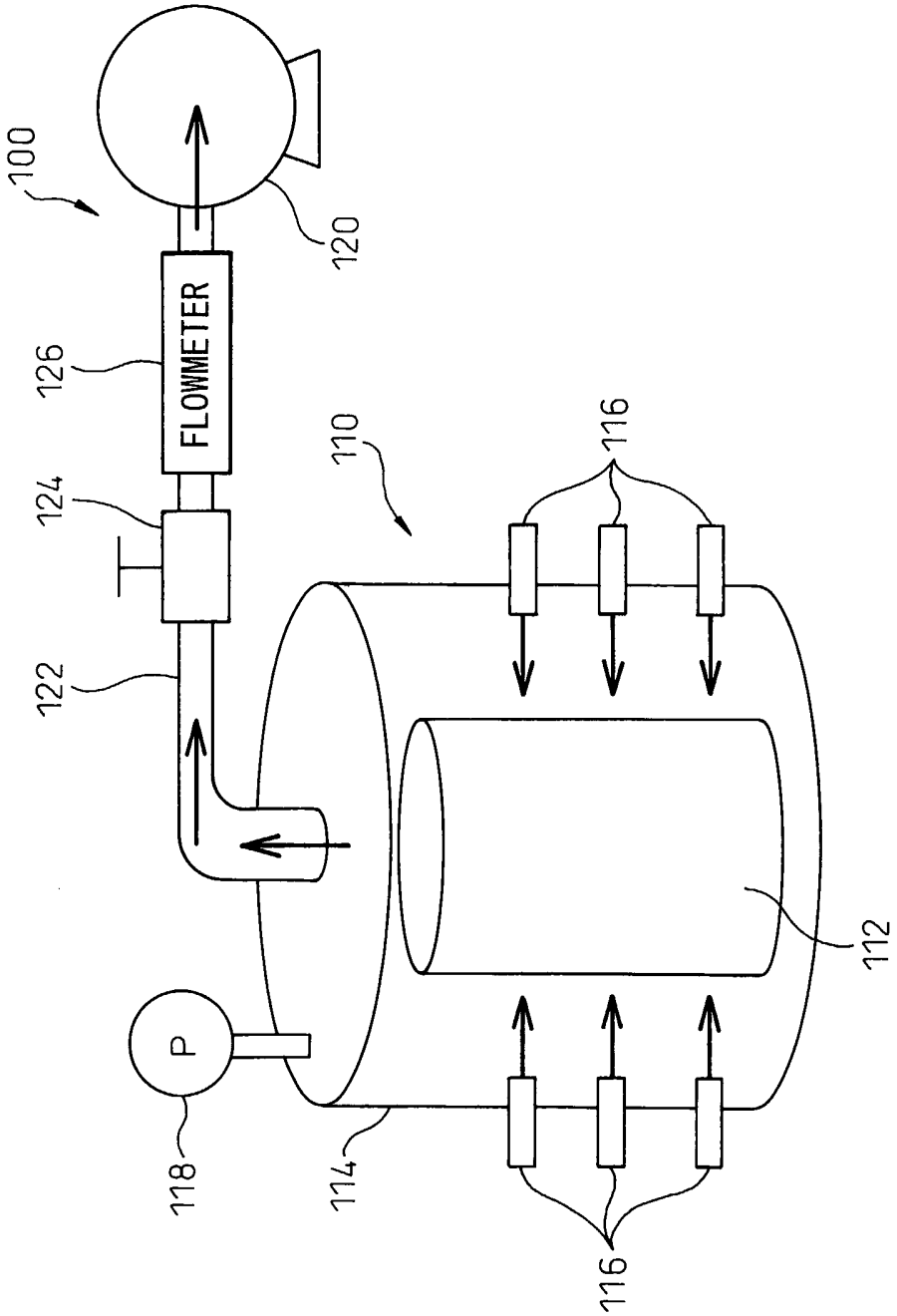

Fig.4

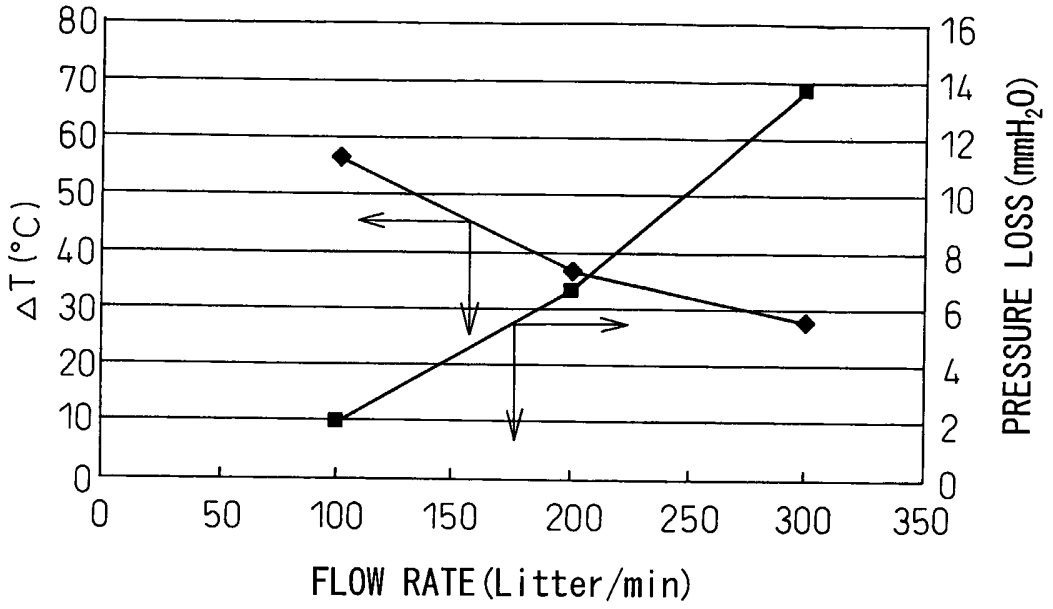
80
70
60
50
40
30
20
10
0
ΔT (°C)
16
14
12
10
8
6
4
2
0
PRESSURE LOSS (mmH2O)
0
50
100
150
200
250
300
350
FLOW RATE (Litter/min)

Fig.5

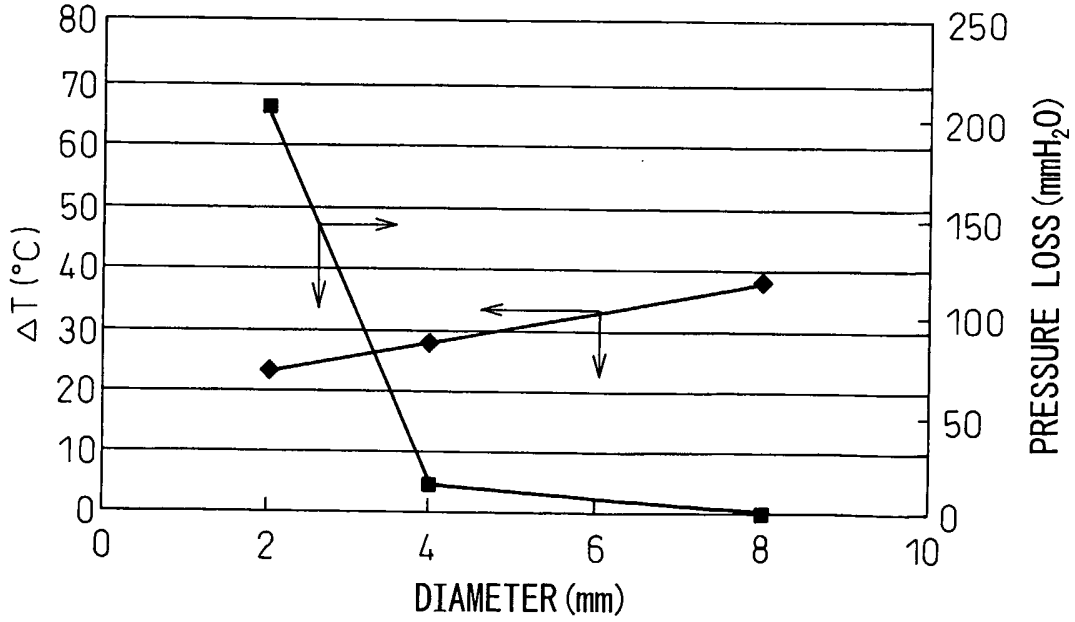
80
70
60
50
40
30
20
10
0
ΔT (°C)
250
200
150
100
50
0
PRESSURE LOSS (mmH2O)
0
2
4
6
8
10
DIAMETER (mm)

Fig.6

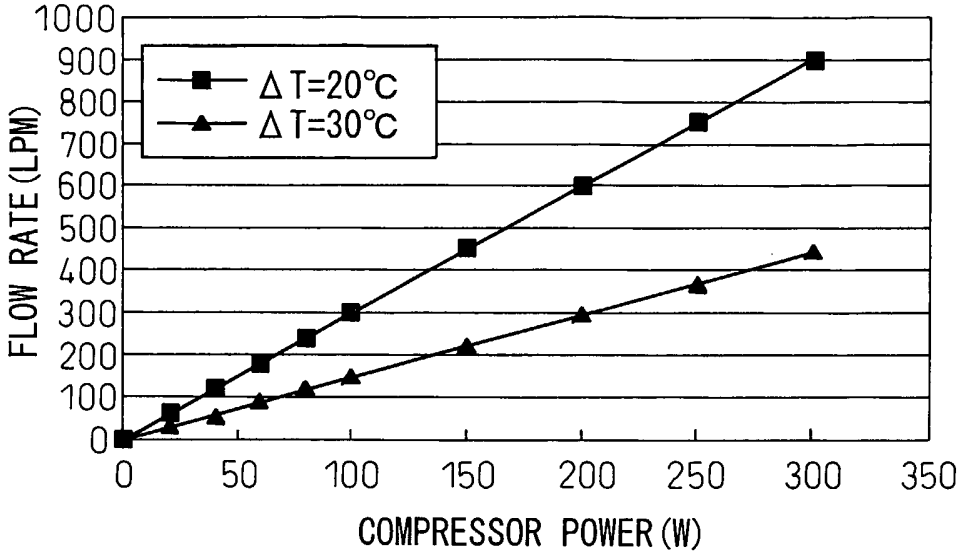
1000
900
800
700
600
500
400
300
200
100
0
FLOW RATE (LPM)
ΔT=20°C
ΔT=30°C
0
50
100
150
200
250
300
350
COMPRESSOR POWER (W)

Fig.7

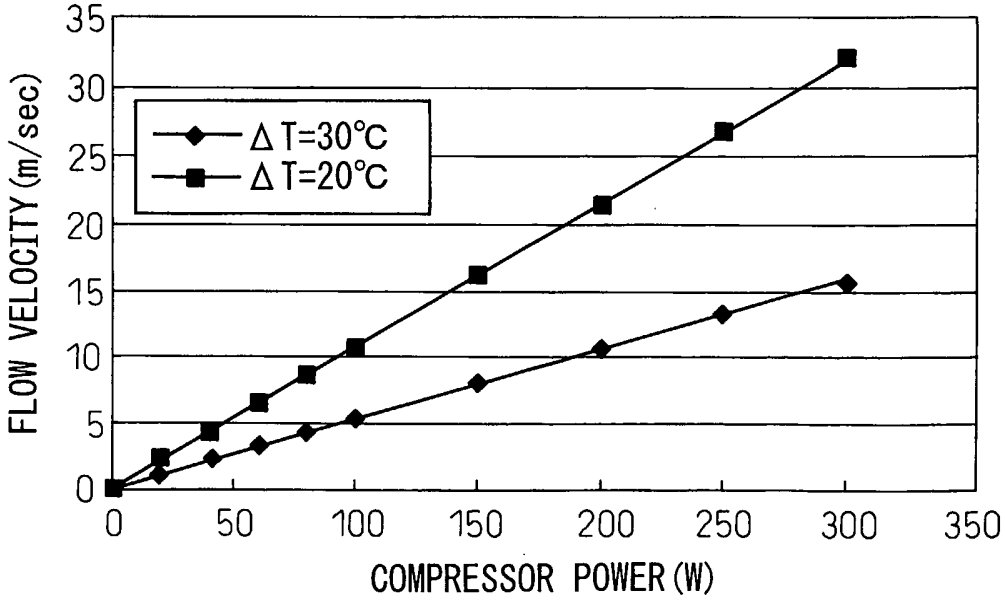
35
30
25
20
15
10
5
0
FLOW VELOCITY (m/sec)
ΔT=30°C
ΔT=20°C
0
50
100
150
200
250
300
350
COMPRESSOR POWER (W)

INTERNATIONAL SEARCH REPORT

Intern[illegible]al Application No
PCT/JP2005/002671

A. CLASSIFICATION OF SUBJECT MATTER
IPC 7 C01B13/02 B01D53/04 B01D53/047 A61M16/10

According to International Patent Classification (IPC) or to both national classification and IPC

B. FIELDS SEARCHED

Minimum documentation searched (classification system followed by classification symbols)
IPC 7 C01B B01D A61M

Documentation searched other than minimum documentation to the extent that such documents are included in the fields searched

Electronic data base consulted during the international search (name of data base and, where practical, search terms used)
EPO-Internal, WPI Data, PAJ

C. DOCUMENTS CONSIDERED TO BE RELEVANT

Category °	Citation of document, with indication, where appropriate, of the relevant passages	Relevant to claim No.
X	US 4 378 982 A (MCCOMBS ET AL) 5 April 1983 (1983-04-05) column 6, line 14 - column 7, line 4; figures	1-4
X	PATENT ABSTRACTS OF JAPAN vol. 2003, no. 12, 5 December 2003 (2003-12-05) & JP 2003 246607 A (TEIJIN LTD), 2 September 2003 (2003-09-02) abstract; figure	1-4
X	WO 03/074113 A (TEIJIN LIMITED; NAKAMURA, HITOSHI; TAGAWA, MASAKAZU; OKADA, KATSUHIKO) 12 September 2003 (2003-09-12) abstract	1

-/--

[X] Further documents are listed in the continuation of box C.

[X] Patent family members are listed in annex.

° Special categories of cited documents :

"A" document defining the general state of the art which is not considered to be of particular relevance

"E" earlier document but published on or after the international filing date

"L" document which may throw doubts on priority claim(s) or which is cited to establish the publication date of another citation or other special reason (as specified)

"O" document referring to an oral disclosure, use, exhibition or other means

"P" document published prior to the international filing date but later than the priority date claimed

"T" later document published after the international filing date or priority date and not in conflict with the application but cited to understand the principle or theory underlying the invention

"X" document of particular relevance; the claimed invention cannot be considered novel or cannot be considered to involve an inventive step when the document is taken alone

"Y" document of particular relevance; the claimed invention cannot be considered to involve an inventive step when the document is combined with one or more other such documents, such combination being obvious to a person skilled in the art.

"&" document member of the same patent family

Date of the actual completion of the international search	Date of mailing of the international search report
18 May 2005	25/05/2005

Name and mailing address of the ISA	Authorized officer
European Patent Office, P.B. 5818 Patentlaan 2 NL - 2280 HV Rijswijk Tel. (+31-70) 340-2040, Tx. 31 651 epo nl, Fax: (+31-70) 340-3016	Van der Poel, W

INTERNATIONAL SEARCH REPORT

Intern al Application No
PCT/JP2005/002671

C.(Continuation) DOCUMENTS CONSIDERED TO BE RELEVANT

Category °	Citation of document, with indication, where appropriate, of the relevant passages	Relevant to claim No.
P,X	& EP 1 481 703 A (TEIJIN LIMITED) 1 December 2004 (2004-12-01) claims	1
A	WO 03/090903 A (AIRSEP CORPORATION) 6 November 2003 (2003-11-06) page 5, paragraph 2 - page 6, paragraph 1 page 7, paragraph 2 page 8, paragraph 3 - paragraph 4	1
A	PATENT ABSTRACTS OF JAPAN vol. 012, no. 078 (M-675), 11 March 1988 (1988-03-11) & JP 62 218502 A (SUMITOMO LIGHT METAL IND LTD), 25 September 1987 (1987-09-25) cited in the application abstract	1

INTERNATIONAL SEARCH REPORT

Information on patent family members

Intern al Application No
PCT/JP2005/002671

Patent document cited in search report	Publication date	Patent family member(s)	Publication date
US 4378982 A	05-04-1983	AU 546611 B2	12-09-1985
		AU 7988482 A	03-03-1983
		CA 1187420 A1	21-05-1985
		DE 3205809 A1	10-03-1983
		DK 6482 A	01-03-1983
		FR 2512125 A1	04-03-1983
		FR 2511890 A1	04-03-1983
		FR 2512126 A1	04-03-1983
		FR 2512170 A1	04-03-1983
		FR 2512127 A1	04-03-1983
		FR 2512226 A1	04-03-1983
		GB 2104409 A ,B	09-03-1983
		IT 1151387 B	17-12-1986
		JP 58036616 A	03-03-1983
		JP 61026408 B	20-06-1986
		JP 63166413 A	09-07-1988
		NL 8202408 A	16-03-1983
		NO 820352 A	01-03-1983
		SE 8200124 A	01-03-1983
		ZA 8200532 A	23-02-1983
JP 2003246607 A	02-09-2003	NONE	
WO 03074113 A	12-09-2003	JP 2003252607 A	10-09-2003
		JP 2004059399 A	26-02-2004
		AU 2003213391 A1	16-09-2003
		EP 1481703 A1	01-12-2004
		WO 03074113 A1	12-09-2003
EP 1481703 A	01-12-2004	JP 2003252607 A	10-09-2003
		JP 2004059399 A	26-02-2004
		AU 2003213391 A1	16-09-2003
		EP 1481703 A1	01-12-2004
		WO 03074113 A1	12-09-2003
WO 03090903 A	06-11-2003	AU 2003223693 A1	10-11-2003
		EP 1497012 A1	19-01-2005
		WO 03090903 A1	06-11-2003
		US 2003200865 A1	30-10-2003
JP 62218502 A	25-09-1987	NONE	