E. B. ALLEN.

BUTTONHOLE SEWING MACHINE.

APPLICATION FILED FEB. 16, 1918.

1,346,102.

Patented July 13, 1920.

4 SHEETS—SHEET 1.

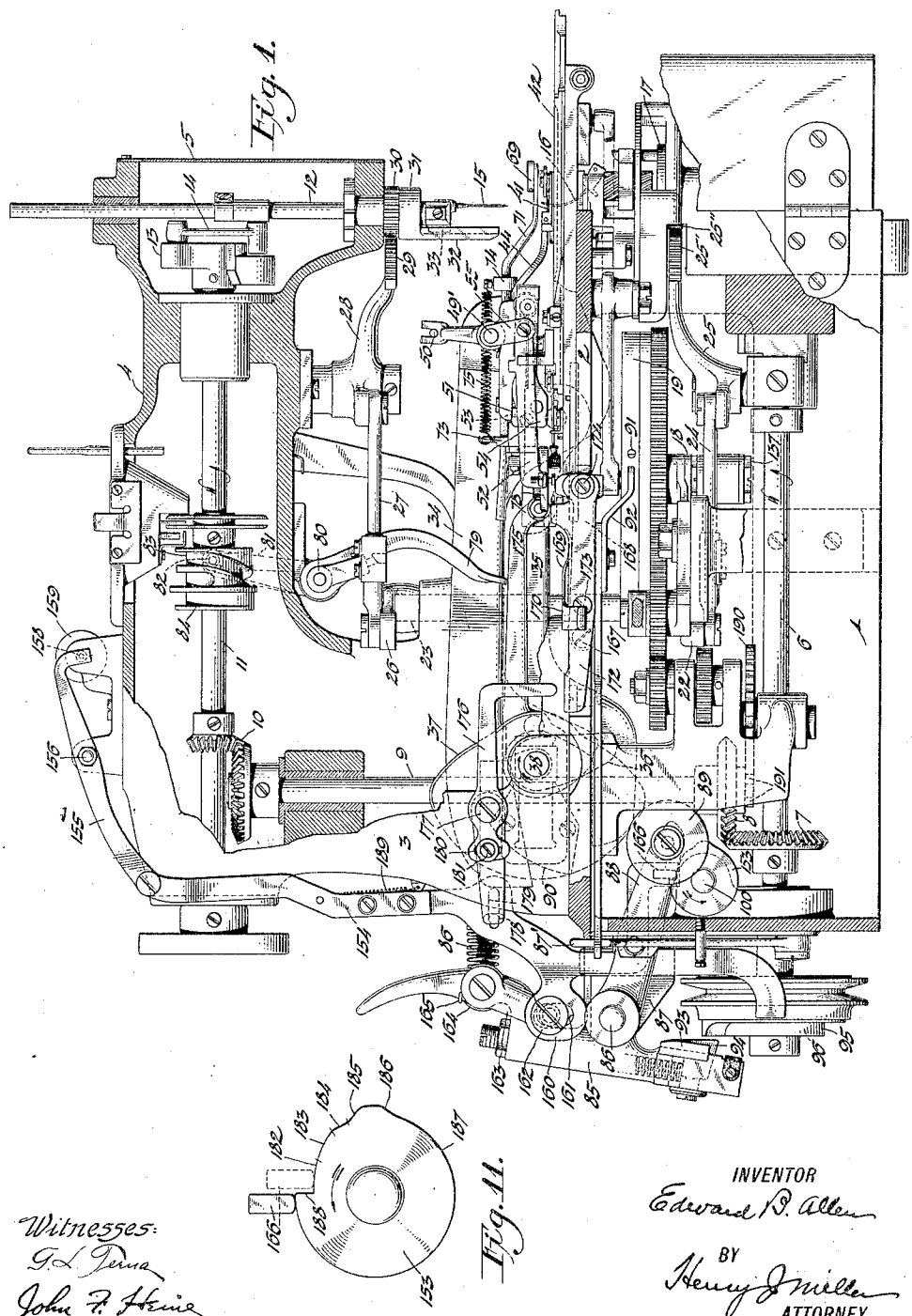

Witnesses:
G. L. Terna
John F. Heine

INVENTOR
Edward B. Allen
BY
Henry J. Miller
ATTORNEY

E. B. ALLEN.

BUTTONHOLE SEWING MACHINE.

APPLICATION FILED FEB. 16, 1918.

1,346,102.

Patented July 13, 1920.

4 SHEETS—SHEET 2.

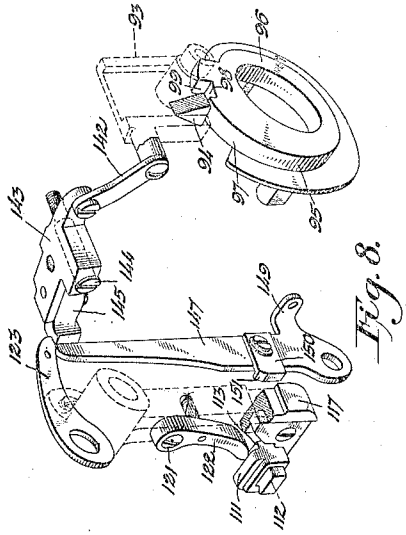

Fig. 8.

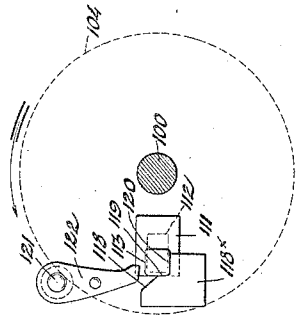

Fig. 10.

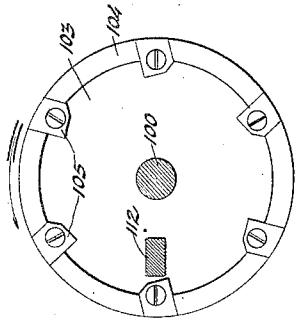

Fig. 9.

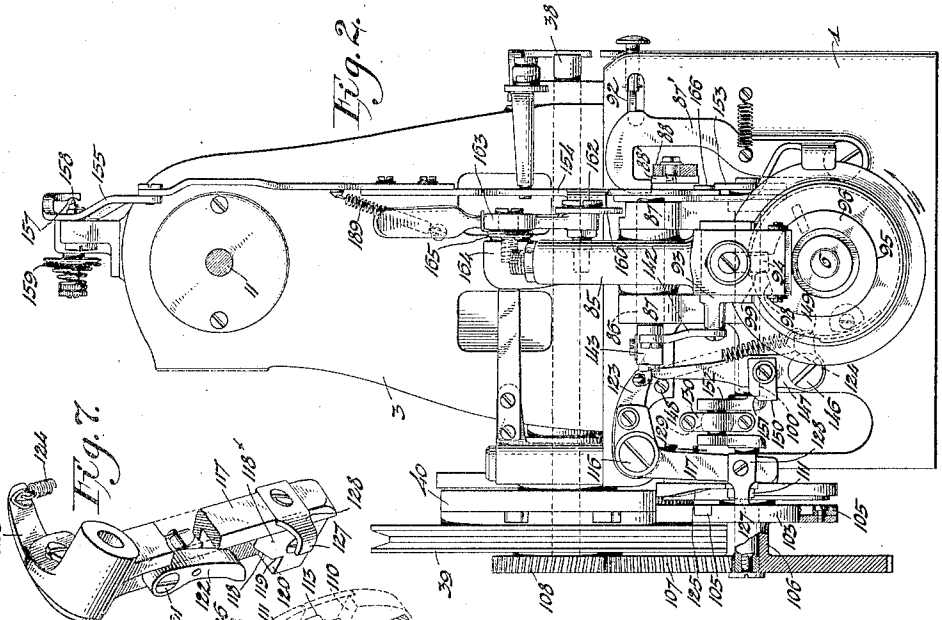

Fig. 2.

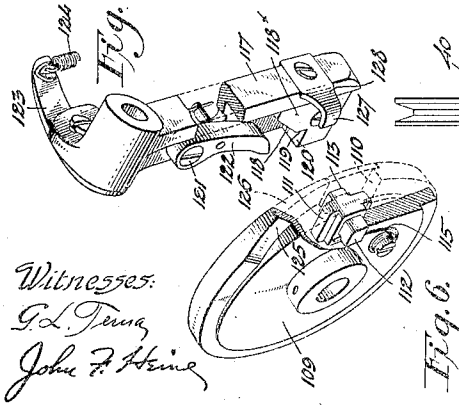

Fig. 7.

Fig. 6.

Witnesses:
G. L. Tenney
John F. Heinz

INVENTOR
Edward B. Allen
BY
Henry J. Miller
ATTORNEY

E. B. ALLEN.

BUTTONHOLE SEWING MACHINE.

APPLICATION FILED FEB. 16, 1918.

1,346,102. **Patented July 13, 1920.**

4 SHEETS—SHEET 3.

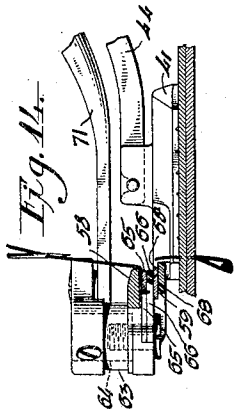

Fig. 14.

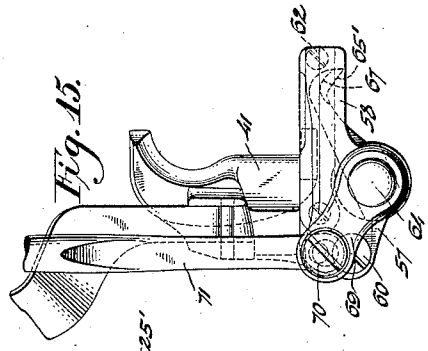

Fig. 15.

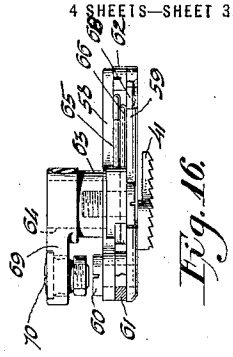

Fig. 16.

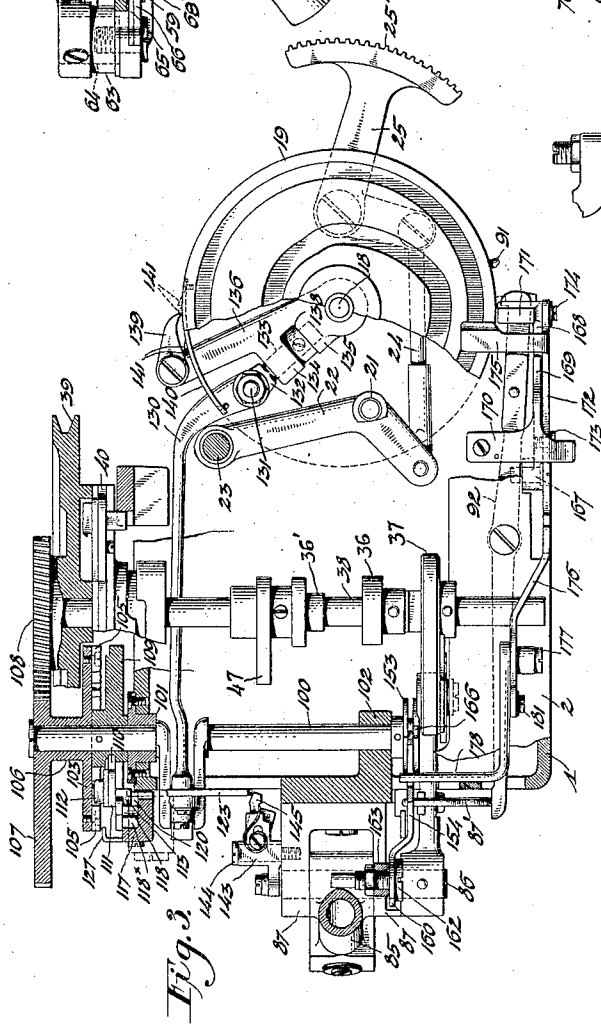

Fig. 3.

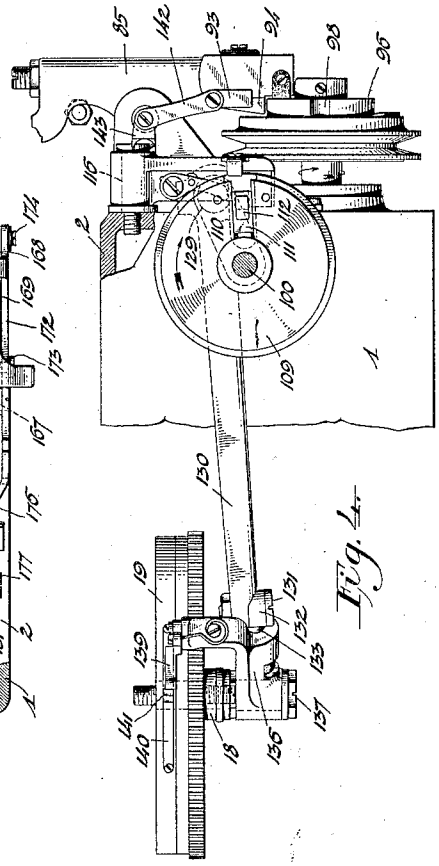

Fig. 4.

Witnesses:
G. L. Tena
John F. Hines

INVENTOR
Edward B. Allen
BY
Henry J. Miller
ATTORNEY

E. B. ALLEN.

BUTTONHOLE SEWING MACHINE.

APPLICATION FILED FEB. 16, 1918.

1,346,102.

Patented July 13, 1920.

4 SHEETS—SHEET 4.

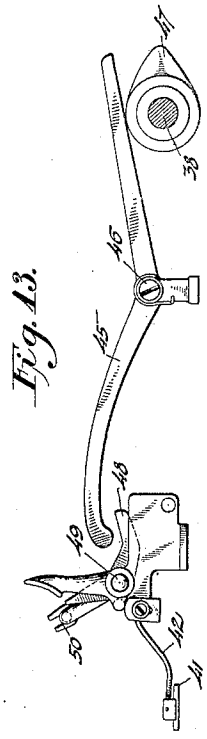

Fig. 13.

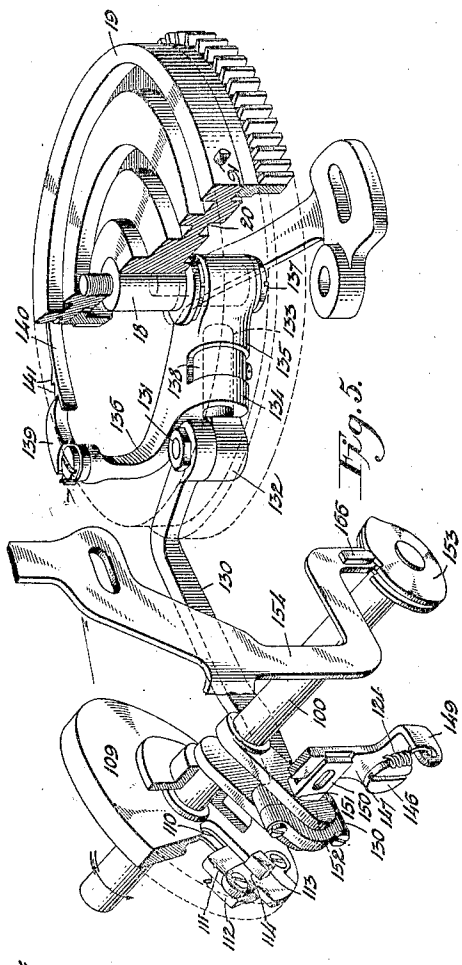

Fig. 5.

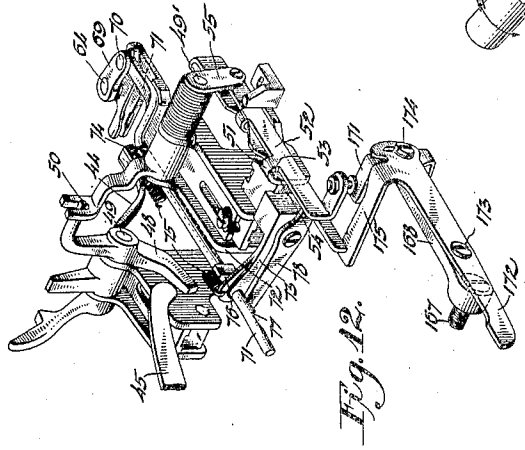

Fig. 12.

Witnesses:
G. L. Terna
John F. Heine

INVENTOR
Edward B. Allen
BY
Henry J. Miller
ATTORNEY

UNITED STATES PATENT OFFICE.

EDWARD B. ALLEN, OF BRIDGEPORT, CONNECTICUT, ASSIGNOR TO THE SINGER MANUFACTURING COMPANY, A CORPORATION OF NEW JERSEY.

BUTTONHOLE-SEWING MACHINE.

1,346,102. Specification of Letters Patent. Patented July 13, 1920.

Application filed February 16, 1918. Serial No. 217,483.

To all whom it may concern:

Be it known that I, EDWARD B. ALLEN, a citizen of the United States, residing at Bridgeport, in the county of Fairfield and State of Connecticut, have invented certain new and useful Improvements in Buttonhole-Sewing Machines, of which the following is a specification, reference being had therein to the accompanying drawings.

The various operations going to make up a complete buttonhole producing cycle, as customarily performed in an automatic buttonhole stitching machine, may be divided into three groups; first, operations performed preparatory to stitching, second, the actual stitching operation and third, operations performed subsequently to stitching. For example, in the eyelet-end buttonhole stitching machine embodying the improvements disclosed in my U. S. Patents No. 1,162,207, of November 30, 1915, and No. 1,048,786, of December 31, 1912, and my copending applications, Serial No. 180,737, filed July 16, 1917, and Serial No. 204,842, filed December 1, 1917, the operations preparatory to stitching comprise the clamping of the work, the cutting and spreading of the buttonhole slit and the restoration of the tension on the stitching thread, while the operations subsequent to stitching comprise the releasing of the thread-tension, the tripping of the thread-cutter, the opening of the work-clamp and the return semi-rotation of the stitch-forming mechanism to initial position.

It is common in machines of this character to secure the performance of certain of these operations, such as the releasing of the thread-tension, the opening of the work-clamp and the cutting of the needle-thread, by a connection deriving movement from the stop-motion device for the stitch-forming mechanism, or by a connection with other movable parts of the stitch-forming mechanism, such as the feed-wheel. The action of these controlling connections is apt to be abrupt and harsh, particularly when actuated by the stop-mechanism, and is not all that could be desired for the reason that the time of operation is so short that it is difficult to effect the various operations in their proper sequence. For example, in a machine of the present type wherein a thread-cutting and -nipping device is mounted upon one of the upper work-clamping members, it is desirable to release the thread-tension before the thread-cutting and -nipping device is tripped, so that loose thread will be available to be drawn in between the active surfaces of the thread-nipper before the cutter acts. If the thread is held taut at this time it will contract or draw back from the nipper the instant it is cut and, as a result, the free end of the needle-thread will not be held by the nipper at the beginning of the next stitching operation. Furthermore, it is desirable that the thread-cutter act before the work-clamps are opened so that the cutter, which is carried by one of the upper clamping members, will not be sliding up the needle-thread when the cutting action takes place, and so that a short and clean-cut thread-end will be left sticking up from the work ready to be drawn down to the underside of the work when the latter is removed from the machine.

In machines of the present type the feed-wheel is turned through one complete revolution during each buttonhole producing cycle and, during the first and major portion of its single rotation, effects the relative stitch-positioning movements of the stitch-forming mechanism and work-holder and turns the stitch-forming mechanism a half-revolution while the stitching proceeds around the eyelet-end of the buttonhole. During the last portion of its single rotation, the feed-wheel effects the reverse turning movement of the stitch-forming mechanism to initial position.

Various efforts have heretofore been made to speed up the latter portion of the single rotation of the feed-wheel, to shorten the time of return of the parts controlled thereby to initial position ready to begin a new cycle of operations. In my said prior machine, the final or rapid movement of the feed-wheel is effected by a constantly vibrating ratchet which is permitted to act upon the feed-wheel at the completion of the stitching operation to impart to the latter a rapid succession of impulses effecting a step-by-step turning movement which is utilized to return the stitch-forming implements to initial position through the usual connections. This ratchet mechanism, however, imparts a series of harsh blows to the feed-wheel tending to produce overthrow of the latter when the ratchet is

operated above a certain speed. Moreover, the ratchet machanism is noisy and is necessarily subjected to considerable wear and tear.

An object of the present invention is to increase the production of a buttonhole stitching machine of the class described by improving upon the mechanism for effecting the return of the stitch-forming implements to initial position at the close of a buttonhole-producing cycle.

A further object of the invention is to provide the machine with an improved mechanism for quickly turning the feed-wheel to effect the functions controlled thereby when the stitch-forming mechanism is inactive, such as the return of the stitch-forming mechanism to initial position during the latter part of the single revolution of the feed-wheel.

A further object of the invention is to provide the machine with improved means for performing certain or all of the various operations subsequent to the stitching operation.

Still further, the invention has for an object to provide the machine with a mechanism which will act in a positive manner to release the tension, operate the thread-cutter and open the work-clamps in the proper sequence and at predetermined and properly spaced intervals of time after the stitch-forming mechanism has been stopped.

Further objects of the invention will appear from the following description and appended claims.

To the attainment of these ends I have combined with the stitch-forming mechanism and with the usual cutter-shaft which is driven independently of the stitch-forming mechanism and performs a single rotation at one stage of the buttonhole producing cycle, a second auxiliary shaft which is also driven independently of the stitch-forming mechanism and is caused to perform in a positive manner the various operations during another stage of the buttonhole producing cycle. Preferably, this second auxiliary shaft is controlled through an automatic clutch permitting it to perform a single rotation only; the clutch being tripped into action preferably by the stop-motion device for the stitch-forming mechanism at the end of the stitching or second stage of the buttonhole producing cycle, so that the second auxiliary shaft will perform its function or functions only during the third or final stage of the buttonhole producing cycle.

In the present instance this second shaft is formed with a crank which is connected by a pitman to a lever-arm carrying a pawl adapted to engage a tooth on the feed-wheel and turn the feed-wheel and stitch-forming mechanism connected therewith to initial position at a single sweep or in one continuous movement; *i. e.*, while said crank is moving from its rearward to its forward dead-center position during the first half of its single rotation. The use of a crank-motion for this purpose is of great advantage as it gradually and smoothly accelerates the feed-wheel during the first part of its motion and permits the feed-wheel to gradually slow up and stop exactly at initial position, thereby completely eliminating any tendency to overthrow such as is present in prior devices, and providing a mechanism capable of quiet, smooth and efficient action at a higher speed than has heretofore been attained.

The present crank-motion for turning the feed-wheel possesses another great advantage over prior devices for the reason that it is stationary during the preparatory and stitching stages of a buttonhole producing cycle and therefore free from useless wear and tear. Further than this, when the clutch which controls the rotation of the second auxiliary shaft is tripped into action it is not suddenly called upon to overcome the inertia of the relatively heavy feed-wheel but is merely subjected to the relatively light shock of starting the second shaft which, when started, assumes the load of the feed-wheel gradually and without shock.

The second auxiliary shaft is provided, in the present instance, with a cam which acts through a follower and suitable connections to release the tension, trip the thread-cutter and open the work-clamps in a predetermined order and at properly spaced time intervals.

In other words, the invention contemplates the provision of a buttonhole stitching machine with two auxiliary shafts, each driven independently of the stitch-forming mechanism; one shaft to effect various operations occurring during the preparatory stage only of a buttonhole producing cycle and the other shaft to effect various operations occurring after stitching or during the last stage only of a buttonhole producing cycle. Preferably these auxiliary shafts are controlled by automatic clutches which arrest their motion at the completion of a single rotation.

In the accompanying drawings, Figure 1 is a side elevation of the machine, partly in section. Fig. 2 is a rear elevation of the machine. Fig. 3 is a plan view, partly in section, showing the feed-wheel, the two auxiliary shafts and the mechanism associated therewith. Fig. 4 is a view in elevation of the feed-wheel and the crank mechanism for turning the latter at one stage of the cycle and Fig. 5 is a detail perspective view of the same. Figs. 6, 7 and 8 are detail perspective views of the clutch-controlling

mechanism for the auxiliary shaft shown in Figs. 4 and 5. Figs. 9 and 10 illustrate details of the clutch-controlling mechanism in elevation. Fig. 11 is a view of the cam and follower which control the tension-releasing, thread-cutting and clamp-opening operations. Fig. 12 is a perspective view of the work-clamp. Fig. 13 is a side elevation of the clamp-closing mechanism and Figs. 14, 15 and 16 illustrate details of construction of the thread-cutting and nipping device for the needle-thread.

In the preferred embodiment of the invention, as illustrated, the machine frame comprises the hollow rectangular base 1 formed with a bed-plate 2 from the rear end of which rises the hollow standard 3 carrying the usual bracket-arm 4 which terminates in the hollow head 5. Extending within and lengthwise of the base 1 is the main-shaft 6 for the stitch-forming mechanism. This shaft carries a bevel-gear 7 which meshes with a companion gear 8 of equal size fixed to the lower end of the vertical shaft 9 journaled within the standard 3. The vertical shaft 9 acts through one-to-two speed multiplying bevel-gears 10 to drive the needle-bar actuating shaft 11 which at its forward end is connected to the reciprocating needle-bar 12 by means of the usual crank 13 and link 14.

The stitch-forming mechanism of the machine may be of any suitable type. In the present instance it is constructed substantially in accordance with the disclosure of my said Patent No. 1,162,207 and embodies the reciprocating straight needle 15 carried by the needle-bar 12 and the lower curved needle 16 which is sustained in the turret 17.

Mounted beneath the bed-plate 2 on the screw-pin 18 is the well-known feed-wheel 19 which is formed in its under face with the cam-groove 20, Fig. 5, acting during a partial rotation of the feed-wheel to shift the cam-follower 21, Fig. 3, and through the usual connections therewith, to turn the stitch-forming mechanism while stitching around the eyelet-end of a buttonhole. At the end of the stitching operation the feed-wheel is given a further turning movement to complete its single rotation and at this time acts to turn the stitch-forming mechanism back to initial position. The cam-follower 21 is sustained by a lever-arm 22 fixed at one end to the vertical fulcrum-shaft 23 and at its opposite end connected by means of the link 24 to the bellcrank-lever 25 which carries the usual toothed sector-gear 25′ meshing with a pinion 25″ on the turret 17. The vertical fulcrum-shaft 23 carries a crank-arm 26 which is connected by means of a link 27 to a bellcrank-lever 28 formed with the toothed sector-gear 29 meshing with the pinion 30 connected to the bushing 31 from which depends the guide-arm 32 having a channelway entered by a stud 33 on the needle-bar, all as more fully described in my said Patent No. 1,162,207.

The buttonhole cutting mechanism of the machine is preferably constructed in substantial accordance with the disclosure of my said Patent No. 1,048,786 and comprises the usual upper and lower cutter-levers 34 and 35 which are advanced and closed to cut the buttonhole-slit in stitching position by means of the usual connections with the cutter-closing cams 36, 36′ and the cutter-advancing and retracting cam 37, all carried by the cutter-shaft 38 which is driven independently of the stitch-forming mechanism from a constantly running pulley 39 through the well-known automatic single-rotation clutch mechanism 40 fully disclosed in my said Patent No. 1,048,786. When the cutter-shaft controlling clutch is tripped into action during the first stage of a buttonhole-producing cycle the constantly running driving pulley imparts a single complete revolution to the cutter-shaft, as is well understood.

The work-holder of the present machine is constructed substantially in accordance with the disclosure of my said copending application Serial No. 180,737, and comprises upper and lower work-clamping elements 41 and 42 of which the upper are sustained at the forward ends of the clamp-arms 44. The upper clamping members or feet 41 are closed upon the work during the first stage of the buttonhole-producing cycle, preferably by means of a lever 45 having a fixed fulcrum 46 and actuated by a cam 47 on the cutter-shaft, as disclosed in my copending application Serial No. 872,333, filed November 16, 1914. During the first part of the single revolution of the cutter-shaft, the cam 47 tilts the lever 45 causing its forward extremity to press downwardly upon and swing the arm 48 to clamp-closing position. The arm 48 is fixed to one of the clamp-closing rock-shafts 49 which in turn is connected in the companion shaft 49′ through the usual fork and pin connection 50. When the clamps are closed upon the work, the tooth 51 on the latch-lever 52 snaps into the notch 53 of the latch-plate 54 and locks the clamps in closed position; the lever 52 being pivoted to the crank-arm 55 which is fixed to the clamp-closing rock-shaft 49′. When the latch-lever 52 is shifted upwardly, the tooth 51 is displaced from the notch 53, thereby allowing the clamps to spring open. This mechanism is fully described in my said copending application Serial No. 204,842.

The machine is preferably provided with thread-cutting and nipping mechanism constructed substantially in accordance with the disclosure of my said copending application Serial No. 204,842. Referring to Figs. 14 to 16 inclusive, it will be seen that one of the

clamping feet 41 is formed with an extension 57 including the slightly resilient upper and lower bars 58 and 59 which are rigidly secured together by the screw 60 and are held in spaced relation by means of the washer 61 and spacing screw-head 62. Journaled within an upwardly extending bearing boss 63 on the bar 58 is a pin 64 in the recessed lower end-face of which is secured the shanks of the overlapping blade-sections 65 and 66 constituting a compound thread-nipping and cutting blade. The outer end-portion of the blade-section 65 is formed with an edge-portion 65′ inclined abruptly outwardly from the adjacent edge-portion to afford an angle for guiding the thread to the nipping point. The edge of the cutting section 66 of the compound thread-nipping and cutting blade is formed beneath the aforesaid angle with the concaved cutting edge 67 which shears the thread against the edge 68′ of the ledger-blade 68 let into the upper side of the bar 59. The compound blade is adapted to move within and substantially fill the space between the bars 58 and 59; the nipping blade-section 65 coacting with the lower wall of the upper bar in nipping the thread. To operate the nipping and cutting elements, the pin 64 has secured to its upper end the crank-arm 69, the apertured extremity of which is loosely entered by the screw-pin 70 threaded into the forward end of the cutter-rod 71 which extends rearwardly alongside the clamp-bearing block 72 and passes loosely through the apertured extremity of the supporting arm 73. Surrounding the rod 71 is a collar 74 to which is secured one end of a tension spring 75 the opposite end of which is anchored to said arm 73. A stop-collar 76 secured to the rod 71 is adapted to strike the arm 73 and arrest the rearward or cutter- and nipper-closing movement of the rod 71 under the influence of the spring 75.

The rod 71 is formed at its under side with a notch 77 which is adapted to be entered by the extremity of an upwardly spring-pressed latch-lever arm 78 to detain the cutter and nipper elements in their retracted or open position.

When the compound thread-cutting and nipping blade is in closed position a forward push upon the rod 71 will serve to retract said blade and release the free end of the needle-thread. While this may be accomplished manually, I prefer to provide the mechanism disclosed in my said copending application Serial No. 204,842, for automatically pushing the rod 71 forwardly. This mechanism includes the tappet-arm 79, Fig. 1, which depends from a tubular cross-shaft 80 rocked by means of an upwardly extending arm 81 having a cam-follower 82 entering a cam-groove 83 in the cam-cylinder 84 on the needle-bar actuating shaft 11. After the tappet-arm 79 has received a single nipper-opening impulse, the cam-follower 82 is ejected from the cam-groove and latched in ejected position.

The main-shaft 6 of the stitch-forming mechanism is controlled by means of a suitable stop-motion device preferably such as disclosed in my said Patent No. 1,048,786. A stop-motion device of this type embodies a tilting starting and stopping lever 85 which is fixed to a fulcrum-pin 86 journaled in the bearing lugs 87. The lever 85 is urged to stopping position by the spring 86 and is held in running position, Figs. 1 and 2, by means of the latch 87′, the upper extremity of which engages over a wear plate 88′ on the arm 88 fixed to and extending forwardly from the fulcrum-pin 86. The arm 88 carries a cam-roll 89 at its free end which is depressed by a cam 90 on the cutter-shaft to start the stitch-forming mechanism during the latter part of the single rotation of the cutter-shaft. At the completion of the stitching operation a tripping point 91 on the feed-wheel acts through a lever 92 to displace the latch 87 laterally and release the lever-arm 88 thereby permitting the stop-levers 85 to spring to stopping position.

As is well understood by those skilled in the art, stop-motions of the present type embody a downwardly spring-pressed slide-block 93 which is mounted upon the stop-lever 85 and is formed with a tooth 94 which snaps into position over the peripheral surface 95 of the clutch-ring 96 when the stop-lever swings to stopping position. Further turning movement of the main-shaft causes the slide-block 93 to be lifted as the outwardly inclined cam-portion 97 of the clutch-ring rides under the tooth 94. Finally, the tooth 94 drops into the stop-notch 98 in the clutch-ring, as the abrupt shoulder 99 forming one side wall of said notch strikes the side face of the tooth 94 and arrests the motion of the main-shaft. This well known upward and downward movement of the slide-block 93 is utilized in the present machine for a purpose to be hereinafter described.

The present machine embodies, in combination with the foregoing features of construction, a second auxiliary shaft 100 which is journaled within and transversely of the bed 1 in the bearings 101 and 102, Fig. 3, and, in the present instance, is utilized to perform certain operations subsequent to stitching. This shaft is normally stationary during the stitching operation and is caused to perform preferably a single revolution only during the third or last stage of the buttonhole-producing cycle. Mounted to turn freely upon an outboard projection of the shaft 100 is the constantly rotating driving disk 103 of an automatic one-revolution clutch device. One side face of the disk 103

is recessed to form a peripheral flange 104 into which is let a series of peripherally spaced and inwardly directed driving teeth 105. The driving disk 103 is further formed with a hub 106 integral with which is a gear-wheel 107 meshing with a pinion 108 fixed to the well-known belt-wheel 39 which turns freely upon the first auxiliary or cutter-shaft 38. The arrangement of the auxiliary shafts 38 and 100 in parallelism transversely of the machine bed and the gear connected driving disks concentric therewith are features of construction which make for a simple, compact and efficient auxiliary mechanism adapted to be driven from a single belt-wheel at the side of the machine and which may be utilized to perform any or all of the various operations before and after stitching.

Fixed to the second auxiliary shaft 100 adjacent the driving disk 103 is a driven disk 109 formed with a radial slideway 110 in which is fitted a slide-block 111 having at one side a clutch-tooth 112 which projects laterally into the recessed portion of the driving disk. At its opposite side the slide-block 111 is formed with a stopping tooth 113 which projects through the slot 114 in the face of the driven disk 109 remote from the driving disk. A spring 115, Fig. 6, mounted on the disk 109 and having its free end bearing against the notched inner end of the clutch-tooth 112 is utilized to urge the slide-block 111 outwardly, thereby projecting the clutch-tooth 112 to a position wherein it will be struck by one of the driving teeth 105, thus coupling the shaft 100 to the source of power.

Fulcrumed on the screw-pin 116 is a clutch-controlling bellcrank-lever having a depending arm 117 which at its lower extremity carries an abutment block 118^{x} having an inclined cam face 118, a detaining shoulder 119 and a stop-shoulder 120. Pivoted to the arm 117 at 121 is a spring-pressed latch 122 the lower extremity of which is spaced above the stop-shoulder 120. The other arm 123 of the clutch-controlling bellcrank-lever is pulled downwardly by the coil spring 124 which acts yieldingly to hold the abutment block in a position such that the stopping tooth 113 is detained in its retracted position by the detaining shoulder 119 and is locked against upward or downward displacement by the latch 122 and stop-shoulder 120, respectively.

In the normal stopping position of the parts thus described, the slide-block 111 is at its extreme inner position with the clutch-tooth 112 withdrawn from engagement with the clutch-teeth 105 of the driving disk 103. The shifting of the clutch-controlling bellcrank-lever, by means presently to be described, so as to move the arm 117 away from the adjacent face of the driving disk 103, disengages the stop-shoulder 120 and detaining shoulder 119 from the stopping tooth 113 of the slide-block 111, thus permitting the latter to move outwardly under the action of its spring 115 to introduce the clutch-tooth 112 into engagement with one of the driving teeth 105. As the driven disk 109 nears the completion of a single revolution, the clutch-controlling bellcrank-lever has been returned to initial position by the action of both the spring 124 and the more positive action of the inclined face 125 of the cam-rib 126 upon the bent extremity 127 of a lateral arm 128 secured to the lower end of the clutch-controlling lever-arm 117, thus bringing the cam face 118 of the abutment block 118^{x} into the path of movement of the stopping tooth 113 by means of which the slide-block 111 is thrust inwardly to disengage its clutch-tooth 112 from the driving teeth 105. As the stopping tooth 113 arrives at initial position, it engages the stop-shoulder 120 and is prevented from rebounding by the extremity of the latch 122 which snaps into operative position as the stopping tooth 113 passes it. By the means thus described the second auxiliary shaft 100 is insured a single complete revolution only for each clutch-releasing actuation of the controlling bellcrank-lever 117, 123.

The secondary auxiliary shaft 100 is formed between its ends with a ball-crank 129 which is embraced by the strapped end of a pitman 130 the opposite end of which is pivotally connected by a screw-bolt 131 to the headed end 132 of a pin having a cylindrical shank 133 entering alined bearing aptures formed in the spaced laterally projecting portions 134, 135 of a lever-arm 136 which is fulcrumed upon a screw-pin 137 concentric with and tapped into the head of the screw-pin 18 which carries the feed-wheel. A collar 138 secured to the shank 133 of said pin between the projecting portions 134, 135 of the lever-arm 136 serves to retain the pin in working position. The pins 131 and 133, having their axes arranged substantially at right angles, form a universal connection between the pitman 130 and the lever-arm 136. At its free end the lever-arm 136 carries a spring-pressed pawl 139 the extremity of which bears yieldingly against the smooth cylindrical surface portion of the feed-wheel into which is let a curved plate 140 formed with one or more teeth 141 which are so placed that when the stop-motion lever 85 is released by the action of the tripping point 91 to stop the stitch-forming mechanism, at least one of said teeth 141 has passed under the extremity of the pawl 139 and is in position to be acted upon by said pawl, as shown by the dotted line positions of the teeth 141 and tripping point 91 in Fig. 3.

It will be noted that in the normally sta-

tionary position of the second auxiliary shaft 100, Fig. 4, the crank 129 is slightly above its rearward dead-center position. In this figure the stop-motion lever 85 has just been tripped and the main-shaft 6 has yet to turn a part of a revolution to first elevate the stopping tooth 94 and then permit it to snap into the stop-notch 98 of the clutch-ring 96.

The slide-block 93 carrying the stopping tooth 94 is connected by a link 142 to the rearwardly extending arm of a lever 143 pivoted to the frame by the screw-pin 144. Pivoted to the forwardly extending arm of the lever 143 is a spring-pressed latch 145 the extremity of which is adapted to snap under the lateral arm 123 of the bell-crank clutch-controlling lever when the slide-block 93 is lifted by the eccentric surface portion 97 of the clutch-ring, as shown in Fig. 8. When the stopping tooth 94 snaps into the stop-notch 98, the slide-block 93, in falling, acts through the link 142, lever 143 and latch 145 to lift the arm 123 and thereby retract the depending arm 117 of the bell-crank clutch-controlling lever and effect the coupling of the auxiliary shaft 100 to the driving disk 103 for a single revolution.

Pivoted to the frame at 146 is an upstanding lever 147 the upper free end of which is yieldingly held against a stop-screw 148 by the action of the spring 124 which is connected at its lower end to a lateral arm 149 of said lever. The lever 147 carries a laterally projecting cam-block 150 having an inclined face 151 which lies in the path of downward movement of the crank-arm 152 and is deflected to one side as the crank-arm passes it during the first part of its single revolution, as shown in Fig. 5. When the lever 147 is deflected, its upper end strikes the latch 145 and disengages it from the arm 123 of the bellcrank clutch-controlling lever, thereby allowing said lever to immediately return to clutch-disengaging position under the action of the spring 124 or under the more positive action of the cam surface 125 of the clutch-wheel 109 upon the bent extremity 127 of the lateral arm 128 fixed to said clutch-controlling lever.

It will be readily understood that the crank on the second auxiliary shaft 100 will, during its movement from rearward to forward dead-center position, turn the feed-wheel at one sweep from its position at the end of the stitching operation to initial position ready to begin a new cycle of operations; this final and rapid movement of the feed-wheel being preferably utilized in the present instance to return the stitch-forming mechanism to initial position through the usual connections hereinbefore referred to.

The second auxiliary shaft 100, with which the present machine has been provided, may be utilized in the performance of various other operations during the final stage of a buttonhole producing cycle. For example, the shaft 100 has, in the present instance, been provided with a cam-member 153 in the form of a pair of spaced disks of similar shape between which is guided the lower end of a lifting bar 154 the upper end of which is pivotally connected too the rearward end of the tension releasing lever 155 fulcrumed to the bracket-arm 4 at 156. At its down-turned forward end the tension releasing lever is formed with a lateral recess 157 affording an inclined cam-wall serving when moved downwardly to shift the usual tension releasing pin 158 inwardly to separate the spring-pressed disks of the tension device 159 for the needle-thread.

Projecting rearwardly from the lifting bar 154, intermediate the ends of the latter, is an arm 160 having at its free end a vertical slot 161 loosely entered by a screw-pin 162 which is threaded into the lower extremity of the hand-lever 163 pivotally secured to a boss 164 formed at its upper extremity of the stop-motion lever 85. The inner end of the screw-pin 162 projects some distance laterally of the hand-lever 163 and is yieldingly held in engagement with the stop-motion lever 85, Fig. 3, by means of the spring 165 which is coiled about the boss 164 and one end of which is hooked about the hand-lever 163, Figs. 1 and 2, and tends to pull the upper end of said hand-lever forwardly. The lifting bar 154 is formed at its lower end with a laterally projecting follower lug 166 adapted to bear upon the peripheral portion of one of the cam-disks 153.

Pivotally mounted on the bed 1 at 167 is the rearward end of the lever-arm 168 which is yieldingly depressed by the forward extension 169 of a leaf-spring 170 screwed to the bed 1. The upwardly and inwardly extending forward extremity 171 of the lever-arm 168 overhangs the bed 1 in a position directly beneath the rearward extremity of the latch-lever 52 which locks the work-clamps in closed position. A lever 172 is adjustably fixed to the lever-arm 168 by means of the pivot-screw 173 and the screw 174 which enters a slot in the forward extremity of said lever 172 and is threaded into the lever-arm 168. Extending upwardly and inwardly from the lever 172 into overhanging relation with the bed 1 is an arm 175 which is positioned under the tail of the latch-lever 78 for the thread-cutter rod 71 previously described.

The rearwardly extending arm of the lever 172 is adapted to be depressed to elevate the thread cutter and work-clamp tripping extensions 171, 175 by means of the lever 176 which is pivoted to the standard 3 at 177 and the laterally bent rearward

arm 178 of which enters the horizontal slot 179, Fig. 1, in the lifting bar 154. The two arms of the lever 176 are relatively adjustable, one of them being formed with a slot 180 which is entered by a screw 181 threaded into the other.

The foregoing parts are so adjusted that when the lifting bar is elevated it first acts to release the tension, second to trip the thread-cutter and lastly to open the work-clamps. To secure the proper spacing of these operations in point of time, the cam 153 is formed with a tension releasing rise 182, Fig. 11, which merges into a cutter tripping rise 183 the latter being followed by a dwell 184 which merges into the clamp-opening rise 185. Following the clamp-opening rise is a depression 186 which permits the cutter- and clamp-opening extensions 171 and 175 to drop sufficiently to insure that the work-clamps may be closed and the cutter reset, but not enough to restore the tension on the needle-thread. Following the depression 186 is a long concentric portion or dwell 187 extending substantially three-fourths of the distance around the cam and terminating in an abrupt declivity 188.

Prior to the starting of the machine, the cam-follower lug 166 rests upon the end of the concentric portion or dwell 187 of the cam, as shown in full lines in Fig. 11. When the stop-lever 85 is tilted to starting position by the action of the usual cam 90 on the cutter-shaft, the lower end of the lifting bar 154 is shifted forwardly, by the action of the screw-pin 162 carried by the stop-motion lever, and the follower lug 166 drops over the declivity 188 to the position shown in dotted lines in Fig. 11, thus permitting the spring 189 to effect the downward motion of the lifting bar 154 and the consequent restoration of the thread-tension; the notch 157 of the lever 155 being thereby brought into register with the tension releasing pin 158.

In the operation of the present machine which embodies the invention in its preferred form, the work is placed in position under the raised clamping feet and the machine is started by the usual treadle-device, not shown, which trips the cutter-shaft into action. During the single revolution of the cutter-shaft, the work-clamps are closed, the buttonhole-slit is cut and spread and the stop-lever 85 is tilted to running position, Fig. 1, by the action of the cam 90 on the cam-roll 89 at the free end of the lever-arm 88; the latch 87′ snapping over the lever-arm 88 and holding the stop-motion lever in running position. The tension on the needle-thread is restored when the cam-follower lug 166 is pushed over the declivity 188 by the tilting of the stop-motion lever.

As the stitching progresses, the feed-wheel receives a relatively slow step-by-step turning motion through the usual gear connections with the star-wheel 190, Fig. 1, with which meshes the diametrically opposed pins 191 carried by the lower end of the vertical shaft 9. In stitching around the eyelet-end of the buttonhole, the stitch-forming mechanism is given a turning movement through the usual connections with the feed-wheel. When the buttonhole is completely stitched, the tripping point 91 strikes the lever 92 and effects the release of the arm 88 from the latch 87′, thus permitting the stop-motion lever to spring to stopping position. At this time the teeth 141 on the feed-wheel have moved to a position just in front of the pawl 139, Fig. 4.

The upward movement of the slide-block 93 carried by the stop-motion lever engages the latch extremity of the lever 143 under the lateral arm 123 of the bellcrank clutch-controlling lever for the second auxiliary shaft 100. As the stopping tooth 94 drops into the notch 98 of the clutch-ring 96 to stop the stitch-forming mechanism, the downwardly moving slide-block 93 retracts the depending arm 117 of the bellcrank-lever, thus tripping the second auxiliary shaft 100 into action to perform its single revolution during which the tension is released, the thread-cutter is tripped, the work-clamps are opened and the feed-wheel is rapidly restored to initial position without noise or shock in the manner previously described.

While I have disclosed the invention as embodied in a buttonhole sewing machine of a particular type, it is to be understood that the invention in many of its aspects is well adapted for use in machines for working straight as well as eyelet-end buttonholes, or for use in lock-stitch buttonhole machines instead of the chain-stitch type of overseaming machines in connection with which the invention is herein illustrated.

Having thus set forth the nature of the invention, what I claim herein is:—

1. In an automatic buttonhole sewing machine, in combination, stitch-forming mechanism, a stop-motion therefor, a work-holder, an auxiliary shaft stationary throughout the stitching and final stages of a buttonhole producing cycle and adapted to act prior to the stitching operation to perform a desired operation preparatory to stitching, and a second auxiliary shaft stationary throughout the preparatory and stitching stages of a buttonhole producing cycle and adapted to act during the final stage of such cycle to perform a desired operation after stitching.

2. In an automatic buttonhole sewing machine, in combination, stitch-forming mechanism, a stop-motion therefor, a work-holder, an auxiliary shaft stationary throughout the stitching and final stages of a buttonhole

producing cycle and adapted to act prior to the stitching operation to perform a desired operation preparatory to stitching, and a second auxiliary shaft stationary throughout the preparatory and stitching stages of a buttonhole producing cycle and adapted to act during the final stage of such cycle to perform a desired operation after stitching, means connected to said first mentioned auxiliary shaft for operating the stop-mechanism to start the stitch-forming mechanism, and means connected to said stop mechanism for starting the second auxiliary shaft after the stitching is completed.

3. In an automatic buttonhole sewing machine, in combination, stitch-forming mechanism, a stop-motion therefor, a work-clamp, an auxiliary shaft stationary throughout the stitching and final stages of a buttonhole-producing cycle with means for causing it to operate prior to stitching and then come to rest, means acted upon by said auxiliary shaft for closing the work-clamp, a second auxiliary shaft stationary throughout the preparatory and stitching stages of a buttonhole producing cycle with means for causing it to operate subsequent to stitching and then come to rest, and means acted upon by said second auxiliary shaft for opening the work-clamp.

4. In an automatic buttonhole sewing machine, in combination, stitch-forming mechanism, a stop-motion therefor, a work-clamp, a thread-cutter, an auxiliary shaft stationary throughout the stitching and final stages of a buttonhole-producing cycle with means for causing it to operate prior to stitching and then come to rest, a buttonhole cutter adapted to be actuated by said shaft, a second auxiliary shaft stationary throughout the preparatory and stitching stages of a buttonhole-producing cycle with means for causing it to operate subsequent to stitching and then come to rest, and means acted upon by said second auxiliary shaft for timing the operation of the thread-cutter.

5. In an automatic buttonhole sewing machine, in combination, stitch-forming mechanism, a stop-motion therefor, a normally stationary auxiliary shaft adapted to act prior to the stitching operation and available to perform a desired operation preparatory to stitching, a second auxiliary shaft stationary throughout the preparatory and stitching stages of a buttonhole-producing cycle and adapted to act subsequently to the stitching operation to perform a desired operation after stitching, and driving means for said auxiliary shafts including constantly running driving wheels each concentric with a corresponding one of said shafts.

6. In a buttonhole sewing machine, in combination, stitch-forming mechanism including a main-shaft, a work-holder, a feed-wheel connected to said main-shaft for producing relative stitch-positioning movements between said stitch-forming mechanism and work-holder in the production of a stitched buttonhole, a normally stationary auxiliary shaft adapted when tripped into action to first initiate the movement of said feed-wheel and then come to rest, a second auxiliary shaft stationary during the preparatory and stitching stages of a buttonhole producing cycle and the timing of the action of which is determined by the feed-wheel, and operative connections between said second auxiliary shaft and said feed-wheel for restoring the latter to initial position.

7. In a buttonhole sewing machine, in combination, stitch-forming mechanism including a main-shaft, a thread-tension device, a work-holder, a feed-wheel connected to said main-shaft for producing relative stitch-positioning movements between said stitch-forming mechanism and work-holder in the production of a stitched buttonhole, a normally stationary auxiliary shaft adapted when tripped into action to first initiate the movement of said feed-wheel and then come to rest, a second auxiliary shaft stationary during the preparatory and stitching stages of a buttonhole producing cycle and the timing of the action of which is determined by the feed-wheel, and operative connections between said second auxiliary shaft and said feed-wheel and tension device for restoring the feed-wheel to initial position and releasing the tension on the stitching thread.

8. In a buttonhole sewing machine, in combination, stitch-forming mechanism including a main-shaft, a work-holder, a feed-wheel connected to said main-shaft for producing relative stitch-positioning movements between said stitch-forming mechanism and work-holder in the production of a stitched buttonhole, a thread-cutter, a normally stationary auxiliary shaft adapted when tripped into action to first initiate the movement of said feed-wheel and then come to rest, a second auxiliary shaft stationary during the preparatory and stitching stages of a buttonhole producing cycle and the timing of the action of which is determined by the feed-wheel, and operative connections between said second auxiliary shaft and said feed-wheel and thread-cutter for restoring the feed-wheel to initial position and causing the threadcutter to sever the stitching thread.

9. In a buttonhole sewing machine, in combination, stitch-forming mechanism including a main-shaft, a work-holder, a feed-wheel connected to said main-shaft for producing relative stitch-positioning movements between said stitch-forming mechanism and work-holder in the production of a stitched buttonhole, a normally stationary auxiliary shaft adapted when tripped into

action to first initiate the movement of said feed-wheel and then come to rest, a second auxiliary shaft stationary during the preparatory and stitching stages of a buttonhole-producing cycle and the timing of the action of which is determined by the feed-wheel, and operative connections between said second auxiliary shaft and said feed-wheel and work-holder for restoring the feed-wheel to initial position and opening the work-holder to release the work.

10. In a buttonhole sewing machine, in combination, stitch-forming mechanism including a main-shaft, a thread-tension device, a work-holder, a feed-wheel connected to said main-shaft for producing relative stitch-positioning movements between said stitch-forming mechanism and work-holder in the production of a stitched buttonhole, a thread-cutter, a normally stationary auxiliary shaft adapted when tripped into action to first initiate the movement of said feed-wheel and then come to rest, a second auxiliary shaft stationary during the preparatory and stitching stages of a buttonhole-producing cycle and the timing of the action of which is determined by the feed-wheel and operative connections between said second auxiliary shaft and said feed-wheel, tension device, thread-cutter and work-holder, for restoring the feed-wheel to initial position, releasing the tension on the stitching thread, severing the stitching thread and opening the work-holder to release the work.

11. In a buttonhole sewing machine, in combination, stitch-forming mechanism, a work-holder, feeding mechanism including a feed-wheel performing a partial rotation in producing the relative stitch-positioning movements between said stitch-forming mechanism and work-holder necessary to the complete stitching of a buttonhole, an auxiliary shaft normally stationary during the stitching operation, and operative connections between said auxiliary shaft and feed-wheel for turning the latter through the remaining part of a complete rotation.

12. In a buttonhole sewing machine, in combination, stitch-forming mechanism, a work-holder, feeding mechanism including a feed-wheel performing a partial rotation in producing the relative stitch-positioning movements between said stitch-forming mechanism and work-holder necessary to the complete stitching of a buttonhole, an auxiliary shaft normally stationary during the stitching operation, a crank on said shaft, and operative connections between said crank and feed-wheel for turning the latter through the remaining part of a complete rotation during a single partial rotation of said crank.

13. In a buttonhole sewing machine, in combination, stitch-forming mechanism, means for turning the stitch-forming mechanism while stitching around the eyelet-end of a buttonhole and for turning the stitch-forming mechanism to initial position after the buttonhole has been stitched, said means including a crank-shaft normally stationary during the action of the stitch-forming mechanism and adapted to perform a single rotation only for each buttonhole-producing cycle.

14. In a buttonhole sewing machine, in combination, stitch-forming mechanism, and means for turning the stitch-forming mechanism while stitching around the eyelet-end of a buttonhole and for turning the stitch-forming mechanism to initial position after the buttonhole has been stitched, said means including a crank and pitman connection normally stationary during the stitching stage of the buttonhole-producing cycle, said crank having a throw sufficient to turn the stitch-forming mechanism to initial position at a single sweep while moving from one of its deadcenter positions to the other.

15. In a buttonhole sewing machine, in combination, stitch-forming mechanism, a work-holder, means including a feed-wheel for producing relative stitch-positioning movements between said stitch-forming mechanism and work-holder in the production of a stitched buttonhole, means actuated by said feed-wheel for turning the stitch-forming mechanism relatively to the work-holder in stitching around the eyelet-end of a buttonhole and for turning the stitch-forming mechanism to initial position after the buttonhole has been stitched, and a crank-shaft driven independently of the stitch-forming mechanism and feed-wheel for turning the latter to restore the stitch-forming mechanism to initial position at a single sweep during a partial rotation of said crank-shaft.

16. In a buttonhole sewing machine, in combination, a frame comprising a hollow base, standard and overhanging bracket-arm, a main-shaft, a feed-wheel normally driven by said main-shaft and mounted within said base in a position forwardly of said standard, and means for imparting a relatively rapid movement to said feed-wheel, said means including an auxiliary shaft journaled within and transversely of said base in rear of said feed-wheel and formed with a crank, and a pitman connection extending forwardly from said crank and adapted when actuated to turn said feed-wheel.

17. In a buttonhole sewing machine, the combination with stitch-forming mechanism and a work-holder, of a feed-wheel performing a partial rotation during the complete stitching of a buttonhole, a power-shaft formed with a crank, and a pitman connection between said crank and feed-wheel for

turning the latter in one continuous movement to initial position.

18. In a buttonhole sewing machine, stitch-forming mechanism, a work-holder, a feed-wheel performing a partial rotation during the complete stitching of a buttonhole, a tooth on said feed-wheel, a pivoted arm, a pawl carried by said arm and adapted to engage said tooth, a power-shaft formed with a crank, and a pitman connected at one end to said crank and at its opposite end to said arm, the throw of said crank being sufficient to turn the feed-wheel in one continuous movement from its position at the end of a stitching operation to initial position.

19. In a buttonhole sewing machine, in combination, a main-shaft, stitch-forming mechanism, a work-clamp, a feed-wheel driven by said main-shaft, a normally stationary auxiliary shaft and connections acting when set in motion to close the work-clamp, a second normally stationary auxiliary shaft and connections acting when tripped into action to open said work-clamp, means connected to one of said auxiliary shafts for starting the stitch-forming mechanism, and automatic means for starting the other auxiliary shaft subsequent to stitching.

20. In a buttonhole sewing machine, in combination, a main-shaft, stitch-forming mechanism driven by said main-shaft, a work-clamp, a feed-wheel connected to said main-shaft for producing relative stitch-positioning movements between said stitch-forming mechanism and work-clamp, buttonhole cutting mechanism including a normally stationary cutter-shaft adapted when tripped into action to perform a single rotation only in cutting the buttonhole, clamp-closing means actuated by said cutter-shaft, a second auxiliary shaft normally stationary during the operation of said main and cutter-shafts, clamp-opening means connected to said second auxiliary shaft, and automatic means for setting said second auxiliary shaft in motion.

21. In a buttonhole sewing machine, the combination with stitch-forming mechanism, a stop-motion device, a work-clamp, a feed-wheel performing a partial rotation in producing relative stitch-positioning movements between the stitch-forming mechanism and work-clamp, a buttonhole cutter, a tension device, and a thread-cutter, of a manually controlled device driven independently of the stitch-forming mechanism for closing the work-clamp, actuating the buttonhole-cutter, starting the stitch-forming mechanism and applying the tension, and a second device driven independently of the stitch-forming mechanism and controlled by the stop-motion for turning the feed-wheel to initial position, releasing the tension, operation the thread-cutter and opening the work-clamp.

22. In a buttonhole sewing machine, in combination, stitch-forming mechanism, a stop-motion therefor, a tension device, a thread-cutter, a work-clamp, a shaft normally stationary during the stitching operation and performing a single rotation only after the buttonhole has been stitched, a cam on said shaft, and operative connections between said cam and said tension device, thread-cutter and work-clamp, said cam having a first eccentric portion adapted to release the tension, a second eccentric portion adapted to effect the operation of the thread-cutter, and a third eccentric portion adapted to effect the opening of the work-clamp.

In testimony whereof, I have signed my name to this specification.

EDWARD B. ALLEN.