F. H. SAUER.

PRESSURE CONTROLLING VALVE.

APPLICATION FILED JULY 7, 1914.

1,115,582. Patented Nov. 3, 1914.

Fig. 1.

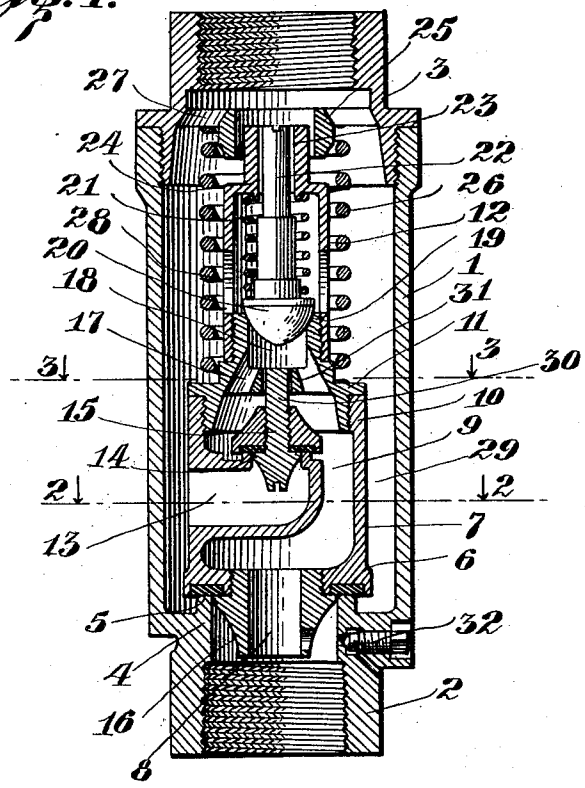


Fig. 2.

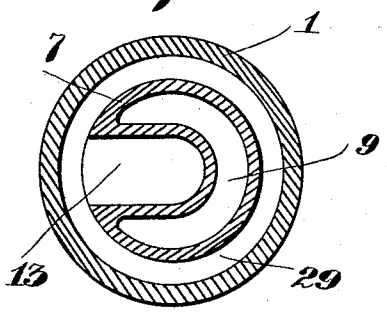


Fig. 3.

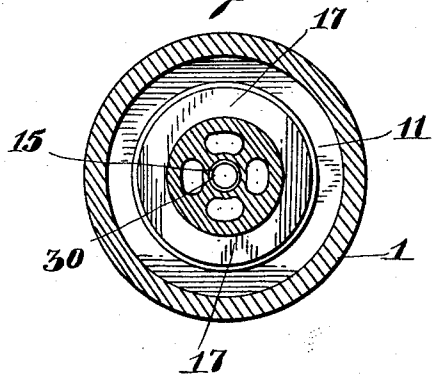


Witnesses:
G. E. Coyle
N. J. Neuschafer

Inventor
FREDERICK H. SAUER
By his Attorney
Clarence S. Ashley

THE NORRIS PETERS CO., PHOTO-LITHO., WASHINGTON, D. C.

# UNITED STATES PATENT OFFICE.

FREDERICK H. SAUER, OF NEW YORK, N. Y.

## PRESSURE-CONTROLLING VALVE.

1,115,582. Specification of Letters Patent. Patented Nov. 3, 1914.

Application filed July 7, 1914. Serial No. 849,617.

*To all whom it may concern:*

Be it known that I, FREDERICK H. SAUER, a citizen of the United States, and a resident of the city of New York, county of New York, and State of New York, have invented certain new and useful Improvements in Pressure-Controlling Valves for Heating Systems, of which the following is a specification.

The invention relates to improvements in pressure controlling valves for hot water heating systems and has particular reference to a valve adapted to be interposed in the water circuit line of a hot water heating system applicable for the regulation of the pressures throughout the system separate from the controlling of the system by means of an expansion tank placed at an elevation at a point distant from the heating generator or furnace and so arranged as to control the excessive pressures throughout a hot water heating system irrespective of the elevation of an expansion tank associated with such systems.

The object of the invention is the providing of a pressure controlling valve having associated therewith a primary valve adapted to control the normal pressures throughout a hot water heating system and having associated therewith and operative in connection with said primary valve an emergency valve adapted to control the pressures throughout a system in case the primary valve should be inactive, said valve being controlled by means of a high tension spring adapted for the control of higher or abnormal pressures throughout a heating system of the nature wherein a pressure controlling valve of this type is applicable.

In the following is described in connection with the accompanying drawings one embodiment of the invention the features thereof being more particularly pointed out hereinafter in the claim.

In the drawings Figure 1 is a vertical sectional view of the pressure controlling valve; Fig. 2 is a cross sectional view on the line 2—2 of Fig. 1; and Fig. 3 is a cross sectional view on the line 3—3 of Fig. 1.

Similar numerals of reference indicate similar parts throughout the several views.

In the drawings (1) indicates a valve casing having formed on its lower end a nipple (2) internally threaded and adapted to receive at that point a pipe connection forming part of a hot water circulating system and said casing (1) is internally threaded at its upper end and has mounted therein a cap (3) adapted to receive one end of a pipe connection forming part of the circulating heating system and particularly that part leading therefrom to an expansion tank associated with and applicable to hot water heating systems of any nature. Valve casing (1) has formed therein at its lower end a shoulder (4) the upper portion of which forms a valve seat (5) adapted to receive the packing ring (6) on the lower end of auxiliary valve casing (7) providing in this instance the primary valve, said auxiliary valve casing (7) has formed therein a passage-way (8) forming a means of communication leading from the pipe connection that connects up the lower end of valve casing (1) through nipple (2), and said passage-way (8) communicates with an interior chamber (9) in said auxiliary valve casing (7) which is internally threaded at its upper end as at (10) to receive the supporting cap (11) of the emergency valve (12).

Auxiliary valve casing (7) has formed therein a port or passage-way (13) and has formed on its upper walls thereof a valve seat (14) which is adapted to receive a valve (15). The lower end of auxiliary valve casing (7) which forms the primary valve is conical in form and the walls (16) thereof act as a guide in the re-seating of same when the pressures throughout a circulating system are reduced or become normal. Supporting cap (11) has formed therein passage-ways (17) communicating with chamber (9) in auxiliary valve casing (7) and said passage-way (17) communicate with an auxiliary chamber (18) provided at its top with a valve seat (19) having mounted therein an emergency valve member (20) the position of which is controlled by means of a heavy tension spring (21), the object of said emergency valve (12) is to provide means adapted to control the system in case the primary valve should be in-active, preventing the rupture or the bursting of the pipes throughout the system. The upper end (22) of emergency valve member (20) engages a bearing (23) in the casing (24) of emergency valve (12), the outside of said casing (24) being adapted to engage a similar bearing (25) formed on the inside of cap (3), said bearing (25) acting in this instance as a guide for the action of said emergency valve (12).

The supporting cap (11) described as being mounted on auxiliary valve casing (7) has resting on its upper surface a tension spring (26) the upper end of which engages the webs (27) of supporting bearing (25), and said tension spring (26) is of a lesser tension than said aforesaid tension spring (21) and is adapted for the regulation of the normal expansion of waters throughout a circulating heating system. Valve casing (24) of the emergency valve has cut therein ports (28) communicating with the inner recesses of said casing and is adapted to form a passageway between chamber (18) and the main chamber (29) within casing (1) of the pressure controlling valve. Valve (15) is provided with a vertically extending stem (30) engaging a bearing (31) formed in the supporting cap (11), and said bearing in this instance acts as a guide for the action of said valve when the pressures throughout the system are less than normal or under the average pressure to expand through the valve proper and controls the return flow of the fluids from the expansion tank through the main chamber (29) through passage-way (13) thence into chamber (9) through passage-way (8) and back through the piping of the system.

A positive valve or auxiliary controlling means (32) is mounted in the valve casing (1) at a point in open communication with the normal pressures of a heating system, the object of the same being to provide means for the instantaneous relief of the system. The auxiliary casing (7) which is provided at its lower end with a suitable valve seat (6) acts in the first instance as a controlling valve for the normal pressures throughout a fluid heating system which average under normal conditions ten pounds fluid pressure, the tension spring (26) thereof controlling the position of said valve being of a lesser tension than the spring (21) controlling the positive position of the emergency valve (20). Emergency valve (20) described as having associated therewith high tension spring (21) controls the pressures throughout a fluid heating system, in case of the in-action of the primary valve, and when open permits the fluid to pass through ports (28) in the emergency valve casing, thence through the pipe connection forming the means of communication between the valve proper and the expansion tank and when the pressures throughout a fluid heating system have expanded and the predetermined degrees of heat had, a reduction in the pressures or in the degree of heat permits the return flow of the fluids (after the pressure is reduced) through the same pipe connection to the interior or main valve chamber (29) through port or passageway (13) actuating valve (15) thence through into chamber (9) of auxiliary valve casing (7) through passageway or port (8) to the pipe connection attached thereto forming part of the circulating piping of a fluid heating system.

It is obvious that the device as herein shown and described may be varied in many cases without departing from the spirit of the invention.

What I claim and desire to secure by Letters Patent of the United States is

A device of the character described including a valve casing, a valve seat formed in said casing, inlet and outlet openings formed in the said valve casing, a primary valve mounted in the said casing provided with a valve head engaging the said valve seat in said casing, a thimble shaped guide mounted in said primary valve provided with a fluid passage-way port and connecting with the fluid chamber in said primary valve, a secondary valve casing mounted on said primary valve, an emergency valve mounted in said secondary valve casing, a guide for said emergency valve, a spring adapted to control the position of said emergency valve during the normal position of said primary valve, an independent fluid passage-way formed in said primary valve connecting with the chamber in said valve casing, a valve seat associated with said independent fluid passage-way, a valve mounted on said valve seat provided with a guide member engaging the secondary valve casing, adapted, when open, to form a free passage-way or a connection between the chamber in said valve casing through said independent fluid passage-way to the chamber of said primary valve.

In testimony whereof I have hereunto signed my name in the presence of two subscribing witnesses.

FREDERICK H. SAUER.

Witnesses:

DANIEL J. DOWLING,

DAVID S. RICHMAN.

**Copies of this patent may be obtained for five cents each, by addressing the "Commissioner of Patents. Washington, D. C."**