(19) Europäisches Patentamt
European Patent Office
Office européen des brevets

(11) EP 1 382 462 A1

(12) EUROPEAN PATENT APPLICATION

(43) Date of publication:
21.01.2004 Bulletin 2004/04

(51) Int Cl.[7]: **B42C 13/00**, B42C 11/02, B42C 11/04

(21) Application number: **03380169.7**

(22) Date of filing: **11.07.2003**

(84) Designated Contracting States:
AT BE BG CH CY CZ DE DK EE ES FI FR GB GR HU IE IT LI LU MC NL PT RO SE SI SK TR
Designated Extension States:
AL LT LV MK

(30) Priority: **18.07.2002 ES 200201681**

(71) Applicant: **AG Ediciones, S.L.**
43006 Tarragona (ES)

(72) Inventor: **Busquets Fontgivell, Xavier-Ernest**
43006 Tarragona (ES)

(74) Representative: **Duran Moya, Luis-Alfonso et al**
DURAN-CORRETJER
Còrsega, 329
(Paseo de Gracia/Diagonal)
08037 Barcelona (ES)

(54) Binding press

(57) The press comprises a horizontal base (1) which can be applied to a receiving surface for supporting the work, with a driving unit (2) for operating a horizontally operating electrohydraulic pressure cylinder (3), of which the rod (4) is connected to a pressing element in the form of a horizontally guided bar capable of transversely acting on the lateral part of the back of the set for binding formed by covers, a steel internal profile and a set of sheets, to achieve the permanent pressing deformation.

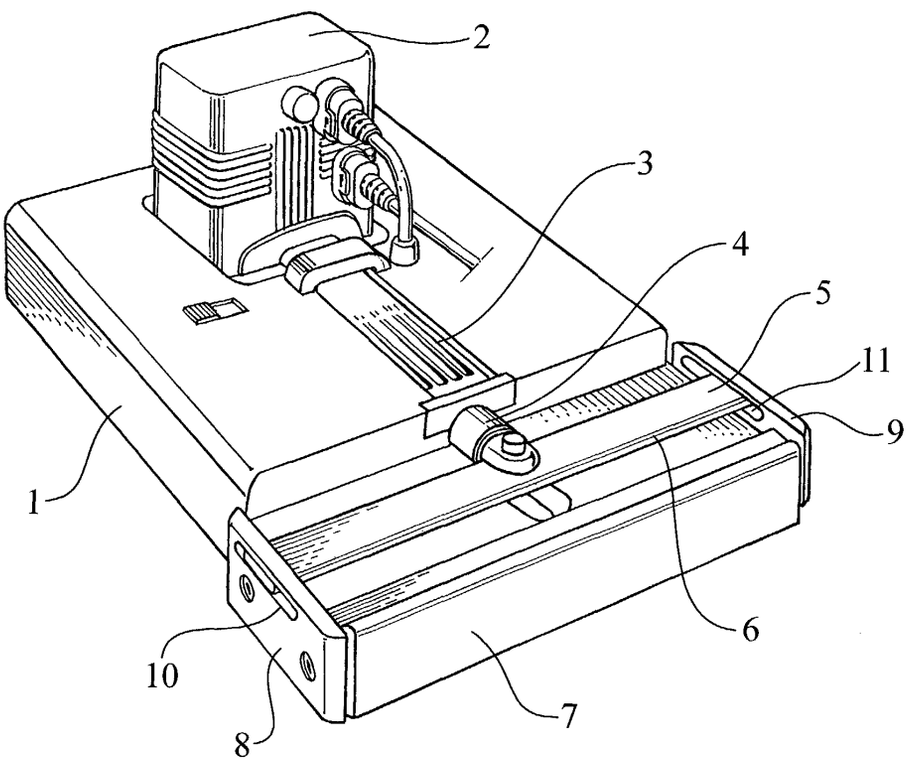

FIG. 1

EP 1 382 462 A1

Description

[0001] The present invention relates to a binding press comprising substantial characteristics of novelty and inventive step with respect to that currently known.

[0002] The binding press according to the present invention is substantially intended to perform the binding operation by using U-shaped metal profiles for the back part of the set of sheets and covers for binding.

[0003] By using the machine according to the patent it will be possible to bind books, pamphlets, magazines, separate sheets, etc. by means of metal backs incorporated in the set of covers, allowing binding to be achieved with variable thicknesses from a few millimetres up to considerable thicknesses in such a way that there is no practical limitation to the minimum number of sheets, up to the maximum capacity of the aforementioned metal elements which will be determined by the travel of the piston of pressure cylinder which, in a usually adopted value, will be 50 mm but obviously could also be varied as appropriate.

[0004] The machine has a general desktop structure with a metal base in which is fixed an electrohydraulic piston intended to generate a translational force of a ram or transverse bar pivotally connected to the piston which exerts the compressive force on the U-shaped element of the set for binding that is placed in a housing or centring box of the respective base.

[0005] The set for binding is formed by the covers which make up the title page, inside cover, back and respective elements of a set of sheets, a U-shaped metal piece of sheet steel being integrated in the back part and being fixed to the set by means of special glues. The metal piece is intended to bring about nipping of the sheets and is therefore a principal element of the binding system.

[0006] With regard to the thickness of the back of the binding, fundamentally eight basic sizes with different numbers of sheets are provided in one binding. These sizes are preferably:

7 mm - maximum	40 sheets
12 mm - maximum	95 sheets
15 mm - maximum	125 sheets
18 mm - maximum	150 sheets
23 mm - maximum	185 sheets
27 mm - maximum	225 sheets
30 mm - maximum	265 sheets
33 mm - maximum	300 sheets

[0007] For the purpose of better comprehension there follow, by way of example, some descriptive drawings of a machine or press for binding, produced in accordance with the present invention.

[0008] Fig. 1 shows a perspective view of the machine.

[0009] Fig. 2 shows a perspective view of the placing of the set of covers and sheets in the press to bring about binding.

[0010] Fig. 3 shows a detail in section.

[0011] Fig. 4 shows a detail in section, similar to that of Fig. 3, after pressing has been effected.

[0012] As is shown in the figures, the binding press according to the invention comprises a steel base 1 intended for placement on a table or workbench and comprising the driving unit 2 for actuating a horizontal electrohydraulic cylinder 3, of which the rod 4 is connected to a press in the form of a transverse bar 5, of which the front edge 6 is configured to exert the pressure for closing the U-shaped profile for binding. The machine has a front block 7 which resists the pressure exerted by the press 5. The lateral plates 8 and 9 provide the guides for displacing the sides of the bar 5 and comprise the grooves 10 and 11 for said guiding function.

[0013] The set for binding is formed, Figs. 3 and 4, by the covers 12 and 13, back 14 and U-shaped steel profile 15, and is disposed in the vertical position in the front cavity 16 of the machine, as can be seen in Figs. 2 to 4, so as to allow the pressing action of the horizontal bar or ram 5, the set for binding directly receiving said pressure, the necessary pressure being applied until the sides of the U-shaped steel profile close, as can be seen in Fig. 4, pressing the set of sheets 17 which are firmly fixed in the binding.

[0014] The end plate 7 may optionally have a rib or profile 18 which acts as a die in the compression effected in the press.

[0015] Said profile 18 may be omitted for the purpose of simplification, in which case the receiving face 19 may be totally flat.

[0016] The mode of operation of the machine is as follows:

1. The type of binding is selected as a function of the size of the back or other shape, in accordance with the number of sheets for binding.
2. The sheets are taken and placed in the interior of the metal back.
3. The set for binding is situated in the groove formed between the end and the sliding piece of the piston of the machine.
4. The button is pressed in the "close" direction so that the piston pushes the cross bar toward the terminal end.
5. The button continues to be activated until the metal back has closed on the set of sheets for binding.
6. The switch is pressed in the "open" direction so that the piston moves back, freeing the set already bound.

Claims

1. Binding press, **characterised in that** it comprises

a horizontal base which can be applied to a receiving surface for supporting the work, with a driving unit for operating a horizontally operating electrohydraulic pressure cylinder, of which the rod is connected to a pressing element in the form of a horizontally guided bar capable of transversely acting on the lateral part of the back of the set for binding formed by covers, a steel internal profile and a set of sheets, to achieve the permanent pressing deformation.

2. Binding press according to claim 1, **characterised in that** the pressure applicator guide in the form of a horizontal bar is achieved by means of grooves in the lateral plates of the front part of the machine, which allow horizontal guidance of said bar.

3. Binding press according to claim 1, **characterised in that** it comprises, in its front part, a box for receiving a set for binding in the vertical position, comprising lateral limiting walls and an end wall intended to resist the pressure exerted by the pressure bar on the set for binding.

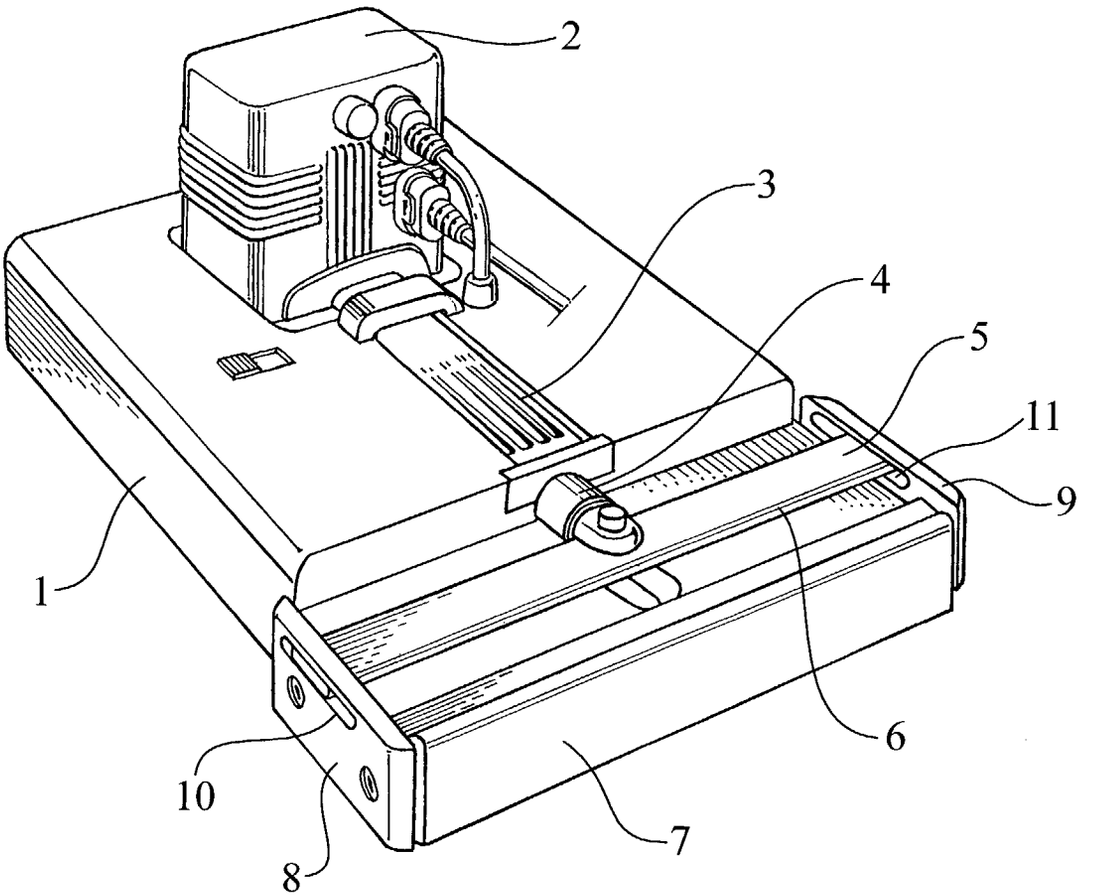

FIG. 1

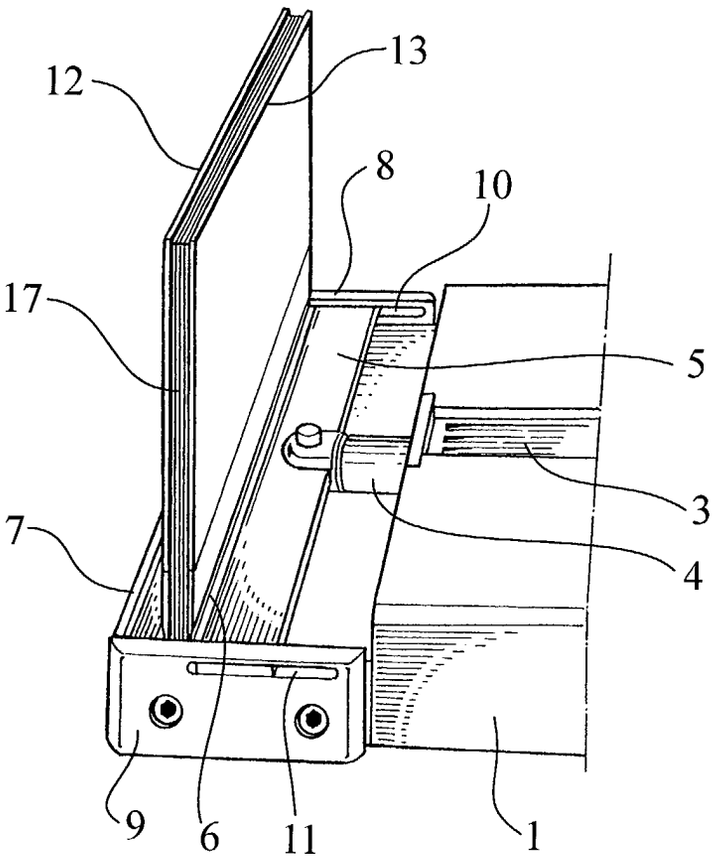

FIG. 2

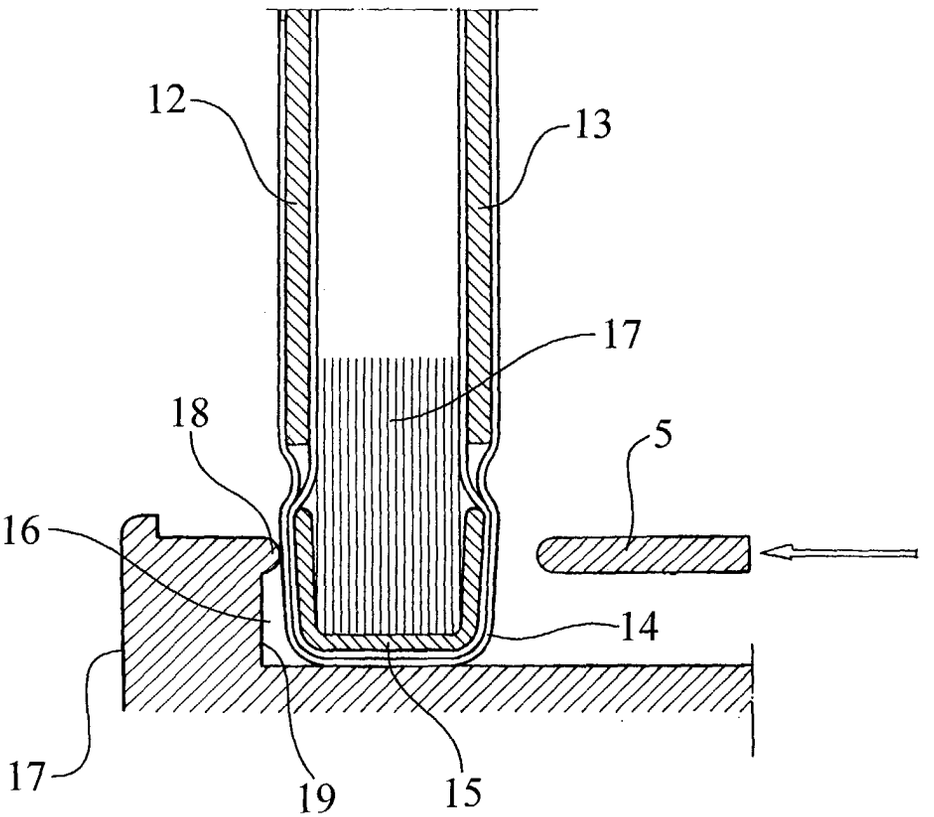

FIG. 3

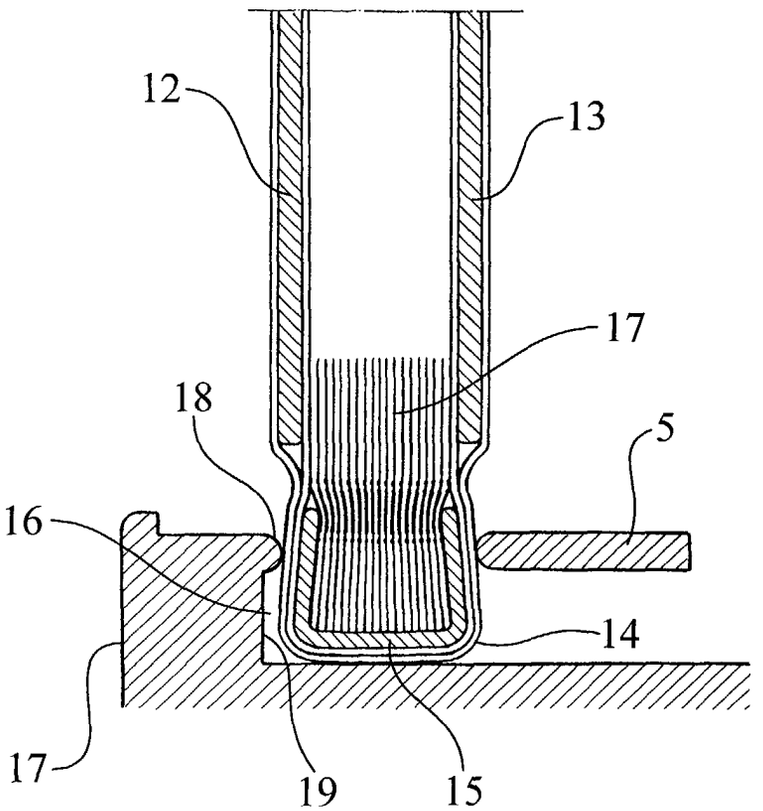

FIG. 4

European Patent Office

EUROPEAN SEARCH REPORT

Application Number
EP 03 38 0169

DOCUMENTS CONSIDERED TO BE RELEVANT

Category	Citation of document with indication, where appropriate, of relevant passages	Relevant to claim	CLASSIFICATION OF THE APPLICATION (Int.Cl.7)
Y	US 5 330 229 A (ZOLTNER JOHN D) 19 July 1994 (1994-07-19) * column 3, line 33 - column 8, line 10; figures *	1	B42C13/00 B42C11/02 B42C11/04
Y	US 3 451 082 A (SARRING ERNEST J) 24 June 1969 (1969-06-24) * column 5, line 71 - column 14, line 66; figures *	1	
A	WO 01 62513 A (MAPING KY L HUOTARI ;HUOTARI HENRI (FI); HUOTARI LAURI (FI); ARCHE) 30 August 2001 (2001-08-30) * page 4, line 22 - page 7, line 5; figures *	1-3	
			TECHNICAL FIELDS SEARCHED (Int.Cl.7) B42C

The present search report has been drawn up for all claims

Place of search	Date of completion of the search	Examiner
MUNICH	31 October 2003	Louvion, B

CATEGORY OF CITED DOCUMENTS

X : particularly relevant if taken alone
Y : particularly relevant if combined with another document of the same category
A : technological background
O : non-written disclosure
P : intermediate document

T : theory or principle underlying the invention
E : earlier patent document, but published on, or after the filing date
D : document cited in the application
L : document cited for other reasons

& : member of the same patent family, corresponding document

EPO FORM 1503 03.82 (P04C01)

ANNEX TO THE EUROPEAN SEARCH REPORT ON EUROPEAN PATENT APPLICATION NO. EP 03 38 0169

This annex lists the patent family members relating to the patent documents cited in the above-mentioned European search report. The members are as contained in the European Patent Office EDP file on
The European Patent Office is in no way liable for these particulars which are merely given for the purpose of information.

31-10-2003

Patent document cited in search report	Publication date	Patent family member(s)	Publication date
US 5330229 A	19-07-1994	US 5061139 A	29-10-1991
		CA 2018292 A1	20-12-1990
		DE 69029434 D1	30-01-1997
		DE 69029434 T2	26-06-1997
		EP 0404556 A2	27-12-1990
		JP 2038381 C	28-03-1996
		JP 3034895 A	14-02-1991
		JP 7067872 B	26-07-1995
		US 5314283 A	24-05-1994
US 3451082 A	24-06-1969	NONE	
WO 0162513 A	30-08-2001	AU 3747301 A	03-09-2001
		EP 1261495 A1	04-12-2002
		WO 0162513 A1	30-08-2001

EPO FORM P0459

For more details about this annex : see Official Journal of the European Patent Office, No. 12/82