July 18, 1967 F. R. TIETGE 3,331,612

SKATE BOARD CONSTRUCTION

Filed April 28, 1965

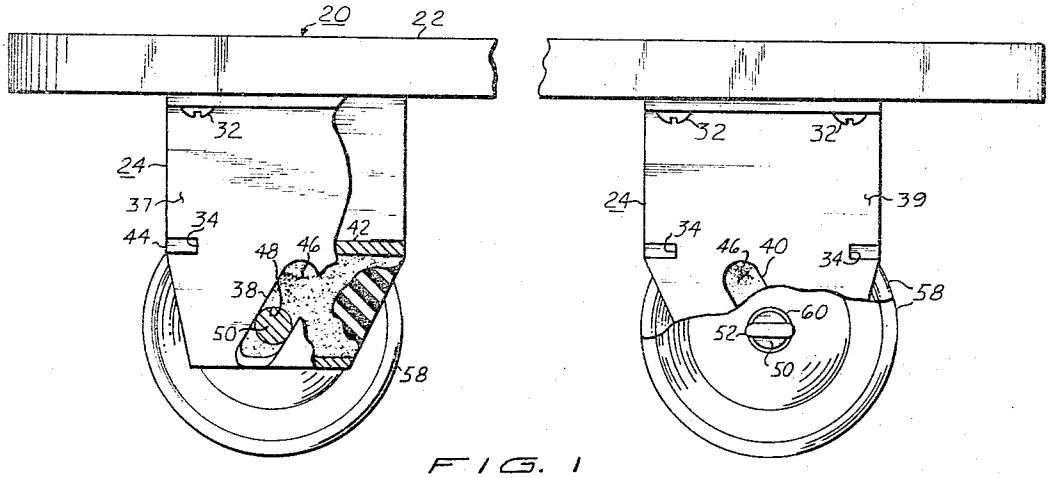

FIG. 1

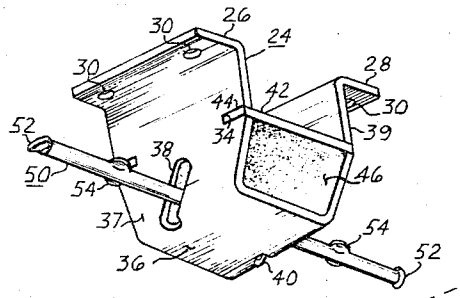

FIG. 2

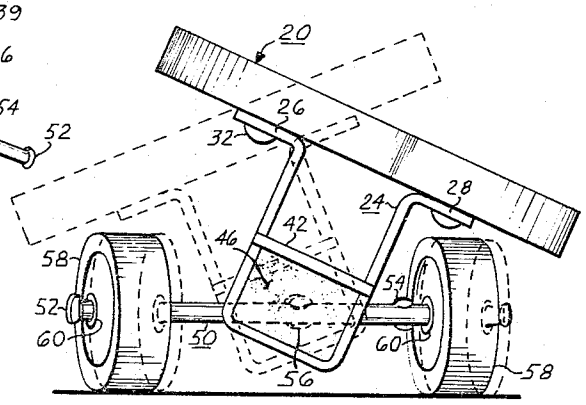

FIG. 3

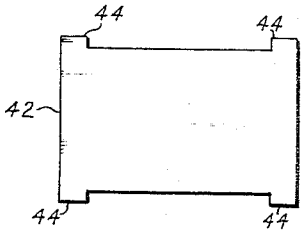

FIG. 4

INVENTOR.
FRED R. TIETGE
BY Carl R. Brown
ATTORNEY

United States Patent Office

3,331,612

Patented July 18, 1967

1

3,331,612

SKATE BOARD CONSTRUCTION

Fred R. Tietge, 3963 Mount Blackburn,
San Diego, Calif. 92111

Filed Apr. 28, 1965, Ser. No. 451,462
1 Claim. (Cl. 280—11.28)

This invention relates to a skate board construction and more particularly to a skate board construction wherein the supporting axle for the skate board's wheels is suspended in a block of resilient material that provides an improved, controlled and shock absorbing pivotal movement.

There are many designs and constructions of wheel supports for roller skates, skate boards and the like. Several of these constructions use resilient or yieldable material to cushion the contact shock of the wheels engaging a supporting surface. However difficulty has been encountered in attempting to provide a wheel support having a cushioned axle that permits the desired degree of freedom of pivotal movement of the wheel axle while still having the cushioned and vibration and shock absorbing axle suspension. Most prior art cushioned axle constructions are complicated, are expensive to make, do not allow the desired degree of resilient support, and are not guided sufficiently. Those that satisfy some of the prior disadvantages, limit the turning and twisting motion of the wheel axle. Further in many cushioned axle constructions, while the axle to a degree is supported by resilient material, there still is metal to metal contact from wheels to skate board that carries the vibrations and shock of wheel contact through to the skate board, roller skate or the like.

It is therefore an object of this invention to provide a novel and improved skate board or roller skate consrtuction.

It is another object of this invention to provide a novel and improved wheel axle guiding and cushioning construction.

It is another object of this invention to provide an improved and novel, integral, vibration and shock absorbing axle suspension for the wheels of a skate board, roller skates or the like.

It is another object of this invention to provide an improved and novel skate board structure wherein the axle and wheels turn against a spring action and thrust resisting axle retention.

It is another object of this invention to provide an improved and novel, cushioned, vibration and shock absorbing axial suspension that is simple and inexpensive to make and yet that permits a wide degree of guided, pivotal movement.

It is another object of this invention to provide a novel and improved skate board structure wherein the wheel supporting axle pivots around the center of its longitudinal length.

The present invention is directed to the construction of a skate board, roller skate or the like in which the wheel supporting axle is solely suspended in a block of resilient material and guided in pivotal movement, within the allowable yield of the resilient block, by diagonal slots in the supporting bracket. To skillfully use skate boards, it is desirable that the wheel axle have sufficient interstructural flexibility so that it shifts and twists with resiliency and snap return action. This insures the turning of the skate board in the preferred skillful manner by application of an appropriate turning force and a similar return of the wheel axle to the normal or forward position upon removal of the turning force. This maneuver of turning the wheel axle with respect to the skate board frame is accomplished by tilting the frame to one side or the other while retaining the skate wheels

2

firmly upon the supporting surface. The coordination of the user in accomplishing these maneuvers is often determined by the quality, controlled flexibility and uniform responsiveness of the skate board's suspension system. The suspended axles of this invention are imbedded in a resilient material that subjects substantially uniform compression and tension forces on the length of the wheel axle when pivoted in the manner previously described. The axle is press fit or imbedded in the block of resilient material and because of friction therebetween resists rotation with the wheels. The cushioning resilient block withstands the normal compression forces due to the weight of the skater while providing a high degree of resilience between skate board frame and wheel axle as the wheels contact the supporting surface.

There are other objects, advantages and features of the invention that will become more apparent from the following specification when taken in connection with the accompanying drawings wherein like reference numerals refer to like parts throughout and:

FIGURE 1 is a side view part in section and part broken away of a skate board having the wheel bracket suspension of this invention;

FIGURE 2 is a perspective view of the bracket, resilient block and wheel supporting axle assembly of this invention;

FIGURE 3 is an end view illustrating the turning of the skate board; and

FIGURE 4 is a plan view of the plate.

Referring now to FIGURE 1, a skate board **20** has a board or stage mounted on traction wheels for use in the well known manner. The board **22** may be made of wood, metal or the like and may have any desired length. The board's function is to support the feet or other portions of the users body. It has a U shaped bracket **24** suspended from the lower surface. The U shaped bracket, that may be constructed from heavy gauge sheet metal or from other suitable materials, has outwardly projecting flanges **26** and **28** that face against the underneath surface of the board **22**. Apertures **30** receive screws **32** for securing the bracket **24** to the board **22**. Positioned in the bottom of the U shaped portion of the bracket is a block of resilient material **46** that may be made of resilient rubber, suitable resilient plastics, synthetic rubber or the like. The block **46** has a shape as shown in FIGURE 1 that conforms with the lower portion of the U shaped member **24**. A plate **42** having ears **44** rests in appropriate slots **34** at each side and end of the U shaped member **24** and prevents vertical upward movement by the resilient block **46**. While the resilient block **46** is held in the bottom of the U shaped member by plate **42**, the block **46** is not in a compressed condition.

The U shaped member or bracket **24** has diagonal slots **38** in each side **37** and **39**. The bottom corners of the U shaped bracket **24** are concave and receive the bottom of diagonal slots **38**. The block of resilient material **46** has a hole **48** bored through its volume which hole is perpendicular to the sides of the block and that is in a plane spaced equidistant from the bottom surface. An axle **50** for carrying the wheels **58** has a diameter considerably larger than the aforesaid hole **48** and is press fitted through the hole to a point that the center **56** of the axle length is at the center point between the sides of block **46** and the U shaped bracket **24**. The axle **50** has flared portions at the center **56** for projecting into the resilient material **46** and increasing the already existing friction force between the outer surface of the axle **50** and the inner surface of the hole **48** in the resilient block material. This friction prevents axle **50** from rotating with the wheels around its longitudinal axis within the block of resilient material **46**. It should be recognized that axle **50** may be suspended in block **46** by any of several con-

struction techniques such as by imbedding, molding therein, press fitting, or the like.

Axle **50** in projecting through the resilient block **42** extends through diagonal slots **38** as shown. In the preferred construction, there is a minute spacing between the outer surface of the axle **50** and the inner edge of the diagonal slots **38**. This permits relatively free movement of the axle **50** in slot **38**. However slot **38** guides the axle in any such movement by contact therebetween. In normal turning of the skate board one end of the axle **50** drops downwardly and the other end of axle **50** rises. This causes axle **50** to be in different positions in each of the respective diagonal slots **38** which induces the pivotal motion to the axle **50** that causes one end of the axle to move forward relative to the other end and to the skate board. The wheels **58** are mounted on axle **50** against ears **54** in the manner shown. The end of the rod **50** is enlarged at **52** for preventing the wheels from moving off the end of the rod **50**. The wheels may be of any type construction and preferably have ball bearings.

In construction the U shaped bracket **24** receives the resilient block **46** which block has the hole **48** cut therethrough. Bracket **24** is then bent around block **46** to the assembled condition (see FIGURE 2) with plate **42** inserted in a position shown. Axle **50** is then forced through hole **48** with the ends of axle **50** projecting out through diagonal slots **38**. The bracket **24** is then secured to the underneath surface of the skate board in the manner shown. As is well known skate board or roller skates have two identical bracket and wheel axle combinations spaced along the length of the board.

In operation the board **22** of the skate board **20** is freely rollable on wheels **58**. A user or operator places his feet or other parts of his body on the board **20** with the person and board all moving together on the aforesaid wheels. When it is desired to maneuver the skate board by shifting the user's weight toward one or the other edges of the skate board **20**, the board is then rotated, as shown in FIGURE 3, relative to axle **50** that is held in a position level with the supporting floor. The tilting board **22** changes the position of axle **50** in diagonal slots **38** thereby causing one wheel to move forward and the other wheel to move rearward. When the operator moves or shifts his weight back to a center position on the board **22**, then the wheels again move to an aligned position in slots **38** and the board moves along a straight line. The board **22** of course may be tilted toward either side as shown in FIGURE 3 with the resultant turning of the wheels to the right or left. It can be seen that the center point of the pivoting by axle **50** is at the center point of the skate board and that each end of axle **50** can move upward or downward in slots **38**. This free movement permits a larger amount of guided pivotable movement relative to a given height and witdh of bracket member **24**. When axle **50** pivots in the flexible block **46** and the material yields to this movement, the material under that portion of the axle **50** that moved downward is in compression and thus exerts an expansive force upwardly. The material above this portion of axle **50** is pulled creating tension forces that exert force on the axle **50** in the same direction as the aforesaid expansive force. The same forces are created in the reverse direction on the other end of the axle **50**. These forces are distributed over the length of the axle that is in the block and thus increases the force or "snap action" that returns the board to upright position. This increases the "feel" the user has in riding the skate board.

Having described my invention, what I claim is:

In a skate board construction,

an axle having a pair of wheels rotatably mounted thereon,

U shaped bracket means with the upper ends capable of being secured to said skate board,

an integral block of rubber fitted into the lower portion of said U,

plate means fitted against the upper surface of said block and fixed to said ends of said U,

each of said sides of said U having aligned elongated slots inclined in the direction of said board,

the bend in said bracket in forming said lower portion of said U being concave with the lower end of said slots extending into said concave portion,

said axle being press fit through said block and solely suspended thereby and projecting through said inclined slots for pivotal movement around the center of the axle's projection through said block,

said block exerting resilient tension and compression forces on the length of said axle within said block on either side of said center,

and said pivotal movement being limited by contact between said axle and ends of said slots.

References Cited

UNITED STATES PATENTS

329,927	11/1885	Mendenhall	280—11.28
3,023,022	2/1962	Boyden	280—11.19 X

FOREIGN PATENTS

1,225,789	2/1960	France.
3,440	9/1876	Great Britain.

BENJAMIN HERSH, *Primary Examiner.*

MILTON L. SMITH, *Examiner.*