May 11, 1965 K. A. MÜLLERS 3,182,922

AUTOMATIC WINDING DEVICE, PARTICULARLY AN AUTOMATIC CROSS-WINDING DEVICE WITH MOVING WINDING LOCATIONS AND A STATIONARY KNOT-JOINTING- AND SPOOL-CHANGING-APPARATUS

Filed Dec. 4, 1962 3 Sheets-Sheet 1

FIG. 1

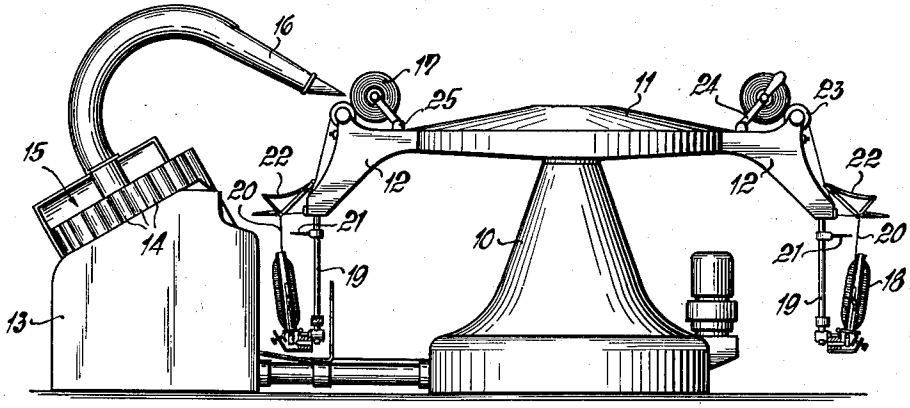

FIG. 2

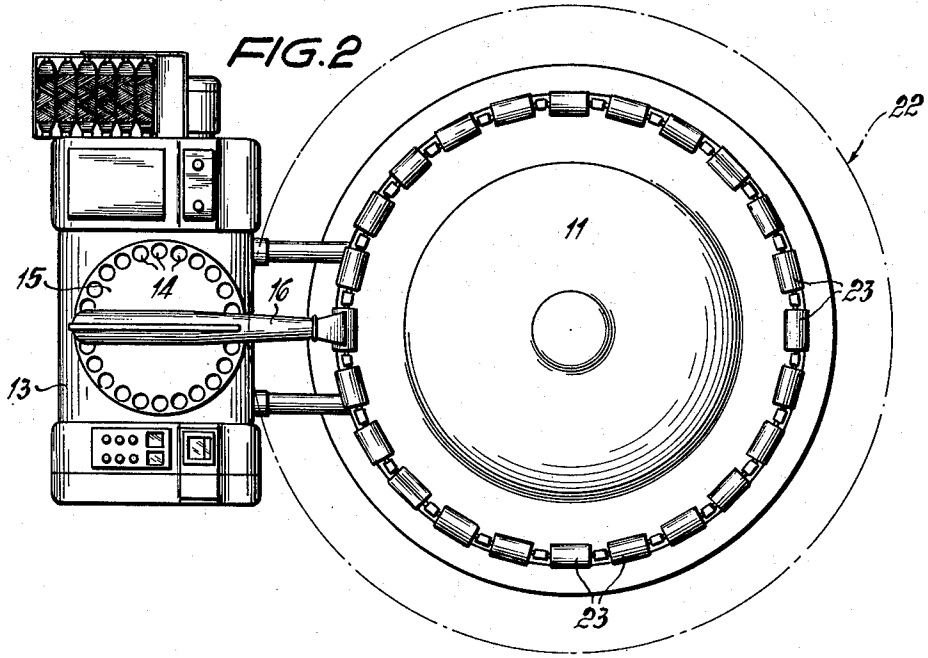

INVENTOR
Karl August Müllers
By Ernest G. Montague
Attorney

May 11, 1965 K. A. MÜLLERS 3,182,922
AUTOMATIC WINDING DEVICE, PARTICULARLY AN AUTOMATIC
CROSS-WINDING DEVICE WITH MOVING WINDING LOCATIONS
AND A STATIONARY KNOT-JOINTING- AND
SPOOL-CHANGING-APPARATUS
Filed Dec. 4, 1962 3 Sheets-Sheet 2

FIG. 3

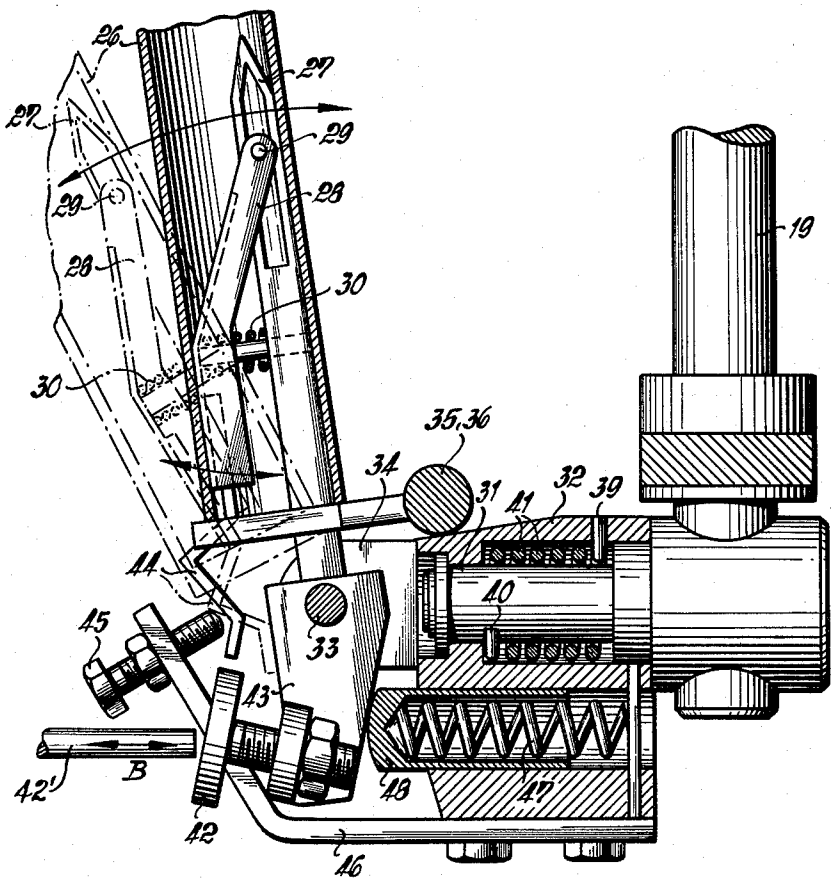

INVENTOR
Karl August Müllers
By Ernest G. Montague
Attorney

May 11, 1965 K. A. MÜLLERS 3,182,922

AUTOMATIC WINDING DEVICE, PARTICULARLY AN AUTOMATIC CROSS-WINDING DEVICE WITH MOVING WINDING LOCATIONS AND A STATIONARY KNOT-JOINTING- AND SPOOL-CHANGING-APPARATUS

Filed Dec. 4, 1962 3 Sheets-Sheet 3

FIG. 4

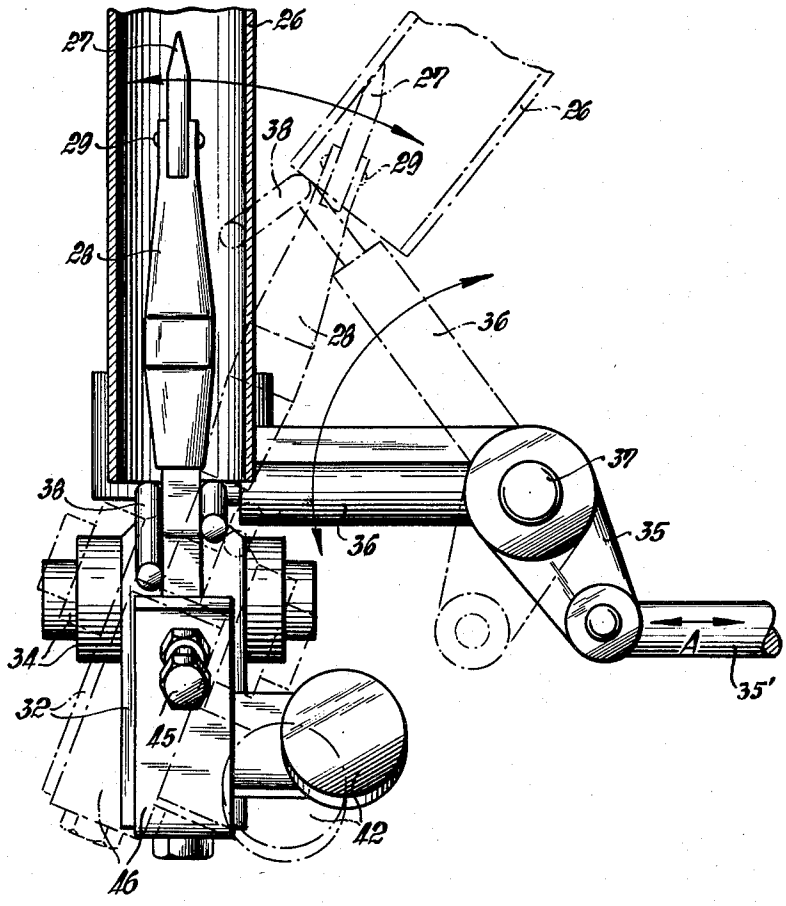

INVENTOR
Karl August Müllers
By Ernest G. Montague
Attorney

United States Patent Office 3,182,922 Patented May 11, 1965

3,182,922

AUTOMATIC WINDING DEVICE, PARTICULARLY AN AUTOMATIC CROSS-WINDING DEVICE WITH MOVING WINDING LOCATIONS AND A STATIONARY KNOT-JOINTING- AND SPOOL-CHANGING-APPARATUS

Karl August Müllers, Grossheide 55, Monchen-Gladbach, Rhineland, Germany

Filed Dec. 4, 1962, Ser. No. 242,267
4 Claims. (Cl. 242—35.5)

The present invention relates to an automatic winding device, particularly an automatic cross-winding device with moving winding locations and a stationary knot-jointing- and spool-changing-apparatus.

Automatic winding devices of different structures are known, and in particular winding devices with immovably disposed winding locations are known, in which each winding location has its own automatic changing apparatus, and wherein also each winding location is equipped with a cop-magazine. This magazine can be formed such, that it receives a plurality of cops, which are then fed automatically to the mounting spindle. It is also possible, however, to provide a plurality of mounting spindles, whereupon the cops are mounted manually, which cops are moved ahead upon removal of the cop which is disposed in discharge position, whereupon a new cop enters the working or operative position. In the meantime, the empty spindles can be always equipped manually with new mounting spools.

Furthermore, winding machines with stationary disposed winding locations are known, whereby one or a plurality of automatic knot-jointing units pass around the machine at the winding locations. These machines have a cop magazine for each winding location, and upon removal of the cop disposed in working or removal position, a reserve cop being in readiness is moved into its working position, and jointed by means of the moving knot-jointing unit.

Finally, winding machines with moving winding locations are also known, which pass by in cycles a stationary disposed knot-jointing unit. Here is the spool magazine coordinated to the knot-jointing unit. The mounting of the new cop takes place always, if a winding location runs empty or if it passes by with a broken thread on the knot-jointing unit.

In all winding machines, it is a presumption, that a mounting spindle is present, which receives the cops to be mounted automatically. The spindle must be formed such, that the cop falls easily onto the spindle, yet is then safely secured. For this purpose, the most differently mounting spindles are known, i.e., with resilient tongues or with spreading means.

In machines with stationary disposed winding locations, wherein the empty cop sleeves, to be thrown out, or cop sleeves, which are partly unwound, fall simply into containers or onto a conveyor device, which feeds the sleeves to the end portion of the machine, the formation and movement of the cop receiving spindle can be comparatively simple, since the latter requires merely a spreading device and has to be tilted in one direction only, in order to throw off the sleeves and to put the mounting spindle into a position, respectively, in which the automatically mounted cop falls onto the spindle.

It is one object of the present invention to provide an automatic winding device, particularly an automatic cross-winding device with moving winding locations of the type disposed above as the third type of machines, whereby each cop spindle, equipped with a sleeve-clamping device, is controlled for a tilting movement from the stationary unit in a radial plane selectively into a receiving position for a full cop or in its removing position tiltable and furthermore, can be transferred into a throw-out position for the empty or partly unwound cop.

In accordance with the present invention, the throw-out position of the cop spindles is provided in a plane set off about perpendicularly to the radial plane, thus tangentially to the direction of rotation of the winding locations.

The decisive advantage of this novel control of the cop spindles resides in the fact, that the movement of the cop spindles takes place in two planes disposed perpendicularly towards each other, each of which has a particular function. Due to the fact, that the empty sleeves and the partly unwound cops, respectively, are thrown out tangentially to the rotating path of the moving winding locations, the total space disposed within the rotating path, is available for the other structural parts of the automatic device. Furthermore, the empty sleeves and the partly unwound cops, respectively, can be fed away very easily and with little technical effort in the throw-off taking place in accordance with the present invention, tangentially to the path of rotation, without necessity that the conveying device crosses the path of rotation. The empty sleeves or partly unwound cops, respectively, can be removed with this conveying device and can then be sorted either manually or automatically.

It is another object of the present invention to provide an automatic winding device, particularly an automatic cross-winding device with moving winding locations, which includes a stripping lever engaging from below the cop sleeve and mounted for a tilting movement, in order to bring about a swinging movement of the cop spindle, which stripping lever swings out the cop spindle mounted in a holder or the like together with the holder in the rotary direction of the winding locations, as well as strips off the empty sleeve, and tensions a helical spring returning the cop spindle into its original position after stripping off the empty sleeve, during the performance of its working movement controlled by a drive rod or the like of the stationary automatically operating knot-jointing- and repeat knot-jointing device. On the other hand, in order to bring about a tilting or inclining movement of the cop spindle into the ready position for receiving a full spinning cop, a drive rod or the like works on an adjustable abutment plate disposed below the spindle axle, whereby during this inclining movement, an extension or tensioning limb pivoted to the cop spindle and spring-biased cross-wise to the longitudinal axle of the spindle, abuts on a set screw extending into the path of the inclining movement and moves the tensioning limb in the direction toward the spindle into a temporarily non-tensioning position, and wherein furthermore, during this inclining movement, a spring is tensionable which spring causes the return movement of the spindle.

If now one cop and an empty cop sleeve, respectively, is to be thrown off and is to be replaced by a completely wound cop, the following control movements are then performed by the automatically working and stationary unit, which controls the working movement for the knot-jointing, as well as for the repeat knot-jointing, and also for the exchange.

When the particular winding location, on which a cop has to be exchanged reaches the working range of the stationary unit, the latter permits a working movement which at first, a for instance, causes, over a connecting rod, or the like, swinging of the cop spindle together with its holder in the direction of rotation of the winding locations, whereby simultaneously the empty cop sleeve is thrown off. If the cop spindle is then automatically returned to its original position, for instance, by means of a spring or the like, another working movement sets in, which causes an inclining movement of the cop spindle in the direc-

tion towards the cop magazine and thus assumes a ready position, in which a complete cop can be mounted thereon. After mounting of the new cop, the cop spindle is returned again into its original position by rendering effective a return spring.

It is thus now completely possible to provide also a change of the cops in an automatic winding machine completely automatically, which should not only be limited to the situation, in which only completely empty cops and their empty sleeves, respectively, are thrown off and replaced by a full cop, rather it is possible also to throw off partly unwound cops and to replace them against a new one from the magazine.

With these and other objects in view, which will become apparent in the following detailed description, the present invention will be clearly understood in connection with the accompanying drawings, in which:

FIGURE 1 is a schematic front elevation of an automatic winding device, and in particular of a cross-winding device;

FIG. 2 is a top plan view of the device shown in FIG. 1;

FIG. 3 is an elongated side elevation, partly in section, of the lower part of the winding device; and

FIG. 4 is an end view of the part shown in FIG. 3 indicating the essential elements only, for the purpose of clearer demonstration of the present invention.

Referring now to the drawings, the automatic winding device comprises a frame or socket **10**, which carries a rotor **11** on the periphery of which the individual winding locations **12** are disposed. The rotor **11** moves the winding locations **12** during its rotation along an immovably disposed knot-jointing unit **13**, which has a thread knot-jointing device, as well as an intermittently rotating magazine **15** which receives the full reserve cops and is formed of a plurality of individual pockets **14**. The drive which performs the individual working movements of the knot-jointing unit **13** is disposed in its housing. Furthermore, this knot-jointing unit **13** has a suction branch **16** which extends into the range of the winding spool **17** and which sucks up, upon thread break, the thread end of the winding spool and feeds the same to the knot-jointing device.

As furthermore is likewise clearly apparent, the bearing elements for receiving the cops **18** are disposed on rod-like downwardly directed holders **19**, which form one part of the winding location. The thread **20** is removed from the cops **18** over their head and runs through the operating range of a balloon disturber **21**, as well as a thread cleaning and braking device **22**. The thread **20** is displaced onto the winding spool **17** provided in spool holders **24** which are mounted on pivots **25** by means of a thread displacing member, for instance, by a slotted drum **23** or the like.

The operation of such automatic winding machine is performed in the following manner:

The individual winding locations **12** pass by successively the immovable knot-jointing unit **13** during their rotation movement. As long as a winding location is not disturbed, it passes by freely along the knot-jointing unit **13**. If it is disturbed, however, that means, if for instance a cop **18** has been emptied, the corresponding winding location stops for a short time period at the knot-jointing unit **13**, whereby the empty sleeve is thrown off and a new cop is mounted. In case of a disturbance, brought about by a thread break, on the other hand, contrary to the cop exchanging program, a knot-jointing program is performed.

Furthermore, in the present embodiment shown in the drawings, the cop **18** comprises a sleeve **26** into which a cop or mounting spindle **27** extends. An immovable seat is achieved in such manner, that a tensioning limb **28** is pivotally connected by means of the pivot **29** with the cop spindle **27**, which tensioning limb **28** is urged by means of a spring **30** in the direction towards the inner wall of the sleeve **26**, and thus, retains clampingly the sleeve **26**. The spring **30** is disposed between the cop spindle **27** and the tensioning limb **28**.

This cop spindle **27** is mounted on a holder member **32** which is swingable about a bearing pin **31** such, that it is received by a bearing axle **33** which extends through the cop spindle **27**, as well as through two bearing cheeks **34** of the holder member **32** in a direction crosswise to the longitudinal axis of the bearing pin **31**. Furthermore, this cop spindle **27** is swingable, on the one hand, about the bearing pin **31** substantially in the direction of rotation of the winding locations (FIG. 4), and, on the other hand, it can be tipped about the bearing axle **33** (FIG. 3).

The operation is performed in the following manner:

If a cop **18** is to be exchanged, the corresponding winding location **12** enters the range of the stationary device **13**, which not only controls the control movements for the jointing and rejointing, but also the exchange movements of the cops. In particular a drive rod **35'** or the like which is effective in the direction of the arrow A, engages a short lever arm **35** of a stripper lever **36** formed as an angular, double-armed lever **38** and swings the latter during its forward movement about an axle **37**, so that it assumes in its end position of the swinging movement the position shown in dotted lines in FIG. 4. During this movement, the empty cop sleeve **26**, which is engaged from below by the angular portion **38** of the stripper lever **36**, is stripped off the cop spindle **27**, while simultaneously, during this movement a helical spring **41** is tensioned, which helical spring **41** engages at one end the member **39** of the holder **32** and at the other end **40** the bearing pin **31**, which helical spring **41** is in position, after stripping off the empty sleeve **26**, to return the empty cop spindle **27** again to its original position, which is shown in full lines in FIG. 4 of the drawing.

Since the cop spindle **27** is again disposed in this position, a further working movement is effective upon the cop spindle **27** in such manner, that a connecting rod **42'** or the like, movable in the driving direction B (FIG. 3) by the automatically working immovable unit **13**, abuts an abutment plate **42**, which is disposed on an extension **43** of the cop spindle **27** below the bearing axle **33**. During the advancing movement, in the direction of the arrow B, the empty cop spindle **27** is transferred into its inclined or tilting position, shown in dotted lines in FIG. 3. During the performance of this movement, an extension of the tensioning limb **28**, which is formed as a multi-crank lever **44**, abuts a set screw **45** which is provided on an angular support **46** secured to the holder member **32**. The tensioning limb **28** is, thereby, transmitted in the direction towards the cop spindle **27** into a temporary de-tensioned position, so that the complete cop emerging from the magazine is mounted easily and freely on the angular lever **38**. Only after the spindle **27** has assumed again the position shown in full lines in FIG. 3, is the sleeve **26** clamped securely again by means of the tension limb **28**.

Furthermore, during the performance of the inclining movement, into a ready position, a spring **47** disposed within the swinging holder **32** is tensioned, by compressing the spring **47** within a pressure sleeve **48** which engages the extension **43** of the cop spindle **27**, so that upon mounting of the full cop by the force of the spring **47**, the cop spindle **27** is returned into and is retained in its original position.

The cop spindle **27** is thus capable of assuming a swinging position due to the successive effectiveness of a plurality of working movements, in which swinging position the empty sleeve is thrown off and, furthermore, can be transformed into an inclined or tilting position, in which the full cop can be mounted. All steps are performed automatically in the above described manner.

While I have disclosed one embodiment of the present invention, it is to be understood that this embodiment is given by example only and not in a limiting sense, the

scope of the present invention being determined by the objects and the claims.

I claim:

1. An automatic winding device, particularly a cross-winding device, comprising

a socket,

a rotor mounted on said socket and defining along its periphery a plurality of winding locations,

an immovably disposed knot-jointing unit disposed adjacent said rotor and including a thread knot-jointing device, as well as an intermittently rotating magazine receiving a plurality of reserve cops,

a plurality of holder members disposed at the periphery of said rotor to provide one of said holder members for each of said winding locations,

a cop carried by each of said holder members,

each of said holder members including and rotatable about a bearing pin,

a pivot disposed crosswise to the longitudinal axis of said bearing pin,

a spindle swingably mounted on said pivot,

means for supporting and clamping means for retaining said cop in a predetermined position on said spindle,

means including a drive rod and a stripper lever adapted to be operated by said knot-jointing unit for swinging out said spindle and moving said cop supporting means relative to said spindle in order to throw off said cop from said spindle by turning said stripper lever, and

means adapted to be operated by said knot-jointing unit for swinging said spindle about said pivot into an inclined cop receiving position simultaneously releasing said clamping means for retaining said cop.

2. The device, as set forth in claim 1, wherein

said stripper lever includes a lever arm pivotally connected with one end of said drive rod and an angular portion engaging the bottom portion of said cop, and

resilient means tensioned during said cop removing movement of said cop supporting means and returning the latter into operative position upon throwing-off said cop.

3. The device, as set forth in claim 1, wherein

said spindle has an extension beyond said pivot,

an abutment plate adjustably mounted on said extension pivot,

a driving rod abutting said abutment plate in order to bring about a tipping movement of said spindle into a cop receiving position,

said cop clamping means including a multi-crank lever,

an immovably set screw engaging said multi-crank lever during the tipping movement of said spindle thereby rendering inoperative said cop clamping means, and

an additional spring disposed in said holder member below said bearing pin, and said additional spring being tensioned during said tilting movement of said spindle, so that said additional spring returns said spindle into its original operative position.

4. The device, as set forth in claim 3, wherein

said holder member has a cylindrical recess receiving said additional spring, and

a pressure sleeve is inserted in and movable in said cylindrical recess in a direction parallel to the longitudinal axis of said bearing pin and engaging said extension of said spindle at a point disposed below said bearing pin and opposite said abutment plate.

References Cited by the Examiner

UNITED STATES PATENTS

1,686,102	10/28	Peterson	242—35.5
2,733,870	2/56	Furst	242—35.6

FOREIGN PATENTS

1,222,608	1/60	France.

MERVIN STEIN, *Primary Examiner.*

RUSSELL C. MADER, *Examiner.*