May 28, 1963 E. B. OGDON 3,091,465

BALL IMPELLING DEVICE

Filed Aug. 29, 1961

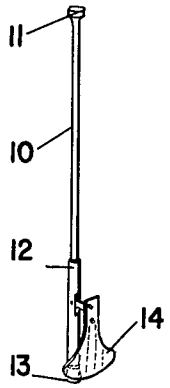

FIG. 1.

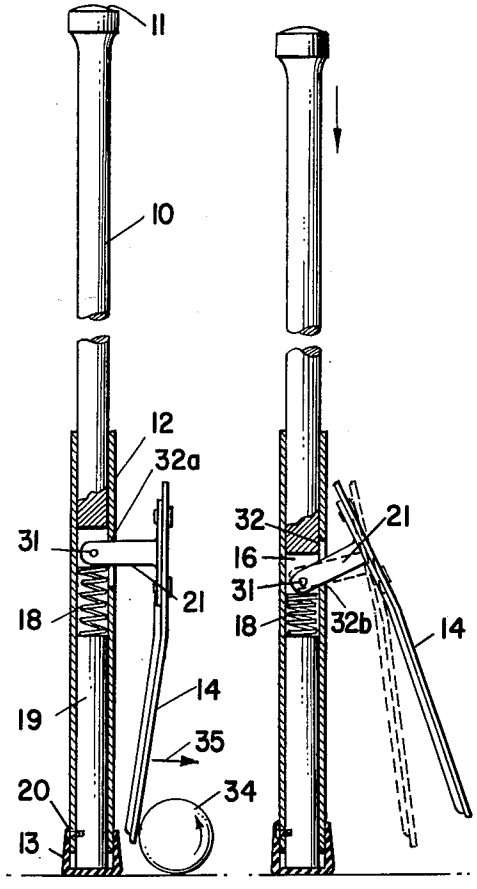

FIG. 3. FIG. 4.

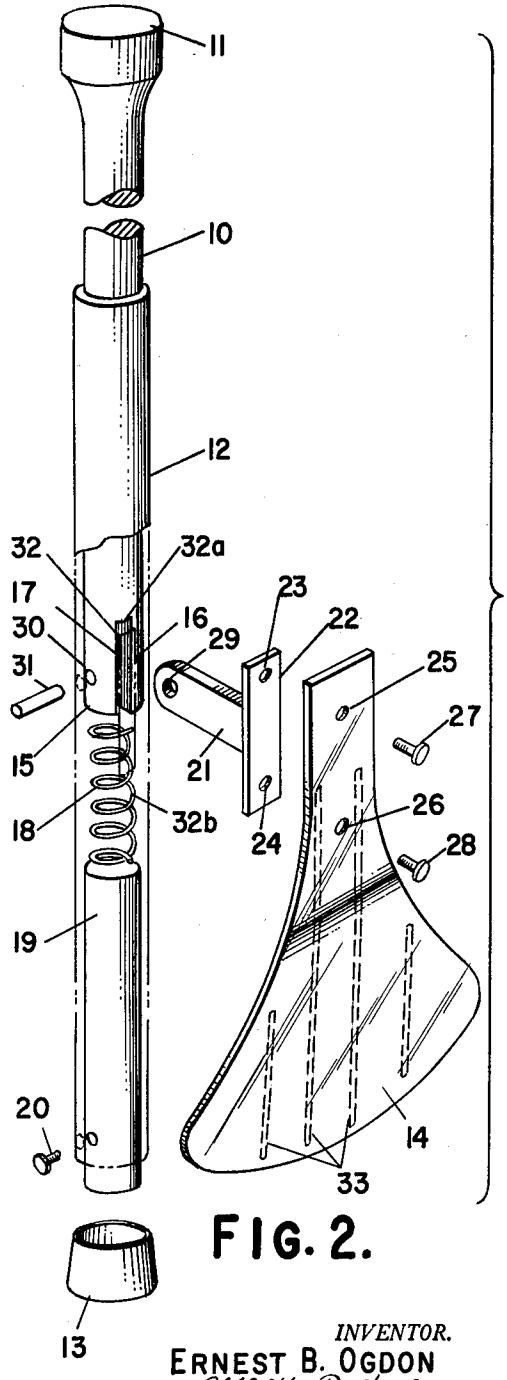

FIG. 2.

INVENTOR.
ERNEST B. OGDON
BY Elliott & Pastoriza
ATTORNEYS

United States Patent Office 3,091,465 Patented May 28, 1963

3,091,465
BALL IMPELLING DEVICE

Ernest B. Ogdon, 3416 Fay Ave., Culver City, Calif.

Filed Aug. 29, 1961, Ser. No. 134,620
5 Claims. (Cl. 273—129)

This invention relates generally to amusement devices and more particularly to an improved ball impelling device or toy for recreational use by one or more persons.

Ball impelling devices have been provided heretofore and generally take the form of an elongated handle structure provided with a paddle adjacent its lower end. Suitable actuating mechanism is provided for coupling the paddle to the handle structure such that a manual operation will serve to swing the paddle outwardly and impel a ball disposed in front of the paddle along a smooth, flat surface. Many of these prior art devices, however, include a relatively large number of components in the actuating means itself, which not only complicates the structure and may thereby decrease its reliability, but also will increase its manufacturing expense.

With the above in mind, it is a primary object of this invention to provide an improved ball impelling device which employs relatively few component parts to the end that greater reliability in operation is assured as well as a substantial decrease in manufacturing costs.

Another object of this invention is to provide an improved ball impelling device in which the mechanism is so designed that a ball impelled thereby will be caused to remain in contact with a flat surface upon which it is caused to roll so that inadvertent lifting of the ball resulting in bouncing of the ball along the surface is avoided.

Briefly, these and other objects and advantages of this invention are attained by providing a pair of telescoping members constituting a holding means together with a paddle means coupled by an actuating means to the lower end of one of the members through a slot provided in the other member. The actuating means is responsive to telescoping movement of the members to swing the paddle means outwardly and impel a ball disposed in front of the paddle means. The other telescoping member having a slot serves the dual function of a guide from the one telescoping member and also as a fulcrum or camming means for the actuating means in moving the paddle structure. As a consequence, certain components heretofore required have been eliminated.

A better understanding of the invention will be had by referring to a preferred embodiment thereof as illustrated in the accompanying drawings, in which:

FIGURE 1 is a perspective view of the ball impelling device of this invention;

FIGURE 2 is an enlarged partially exploded view of the device shown in FIGURE 1;

FIGURE 3 is a side elevational view partly in cross section illustrating the paddle means in a contracted position; and,

FIGURE 4 is a view similar to FIGURE 3 illustrating the paddle means in an outwardly swung or extended position.

Referring first to FIGURE 1, the device comprises a shaft **10** terminating at its upper end in an enlarged head portion **11** and arranged to have its lower end telescopically received within a tube **12**. The lower end of the tube **12** terminates in a surface engaging foot **13**. A paddle **14** of flared construction is coupled adjacent the lower end of the tube **12** and terminates short of the foot **13** so that it may swing outwardly without interference of the ground or other smooth surface upon which the foot **13** is positioned.

The foregoing arrangement is such that downward pressure applied to the upper portion **11** of the shaft **10** will cause the lower end to telescope within the tube **12** and through a suitable actuating mechanism swing the paddle **14** outwardly so as to impel a ball disposed in front thereof. The manner in which this operation is effected will become clearer by referring to FIGURES 2, 3, and 4.

As shown most clearly in FIGURE 2, the lower end of the shaft **10** terminates in a bifurcated structure **15**, **16** defining a slot **17** opening out the lower end of the shaft **10** and diametrically opposite sides of said lower end. Below the bifurcated structure is a compression spring **18** having its upper end engaging the shaft **10** and its lower end engaging a cylindrical plug **19** secured within the lower end of the tube **12** as by a screw **20**. The spring **18** thus biases the shaft **10** upwardly or tends to urge the same telescopically from the tube **12**.

A paddle bracket means **21** is secured to the paddle **14** at one end by means of a flange **22** provided with holes **23** and **24**. These holes register with corresponding holes **25** and **26** in the upper portion of the paddle and suitable screws or rivets **27** and **28** are provided for securing the flange to the paddle. The paddle bracket **21** thus extends laterally from the upper rear portion of the paddle **14**.

The other end of the paddle bracket **21** is provided with a transverse bore **29** arranged to be received between the bifurcated portions **15** and **16** in the slot **17** at the lower end of the shaft. The bifurcated portions **15** and **16** are provided with bores such as indicated at **30** registering with the bore **29** and arranged to receive a pivot pin **31** so that the paddle bracket **21** is pivoted to the lower end of the shaft **10**. The tube **12** is provided with a single access hole to receive the pin **31**.

In order to receive this portion of the paddle bracket, the tube **12** is provided with a lateral slot **32** adjacent the bifurcated portion, this slot defining upper and lower edges **32***a* and **32***b* somewhat further spaced apart than the length of the slot **17** in the shaft. The pin **31** is of a length corresponding to the outside diameter of the shaft **10** but is slightly less than the inside diameter of the tube **12** so that the shaft **10** can telescopically slide within the tube without interference from the pin **31**.

The operation of the device will be evident from the foregoing description of the various components. Thus, with particular reference to FIGURES 3 and 4, it will be evident that without any downward pressure exerted on the shaft **10** the spring **18** will urge the shaft **10** upwardly until the upper side of the paddle bracket **21** engages the upper edge **32***a* of the slot in the tube **12**. This engagement will tend to rotate the paddle bracket **21** in a clockwise direction about the pivot pin **31**. The extent of rotation, however, will be checked by the lower end of the paddle **14** engaging the side of the tube **12**.

If now a downward movement is exerted on the shaft **10** to telescope the lower end thereof inwardly within the tube **12**, the bracket **21** will be urged downwardly until its lower side engages the lower edge **32***b* of the slot **32**, thereby swinging the paddle bracket **21** in a counterclockwise direction or upwardly to move the paddle **14** upwardly and outwardly. Cessation of the pressure on the shaft **10** will then permit the spring **18** to retract the paddle **14** as described in conjunction with FIGURE 3.

With reference once again to FIGURE 2, it will be noted that the paddle includes reinforcing ribs **33** on its rear side opposite its ball engaging surface. Also, as is best shown in FIGURE 3, the ball engaging surface of the paddle is inclined forwardly from the vertical when in its retracted position. By this arrangement, a ball **34** when engaged by the ball engaging surface of the paddle **14** will be caused to roll along the ground and there is prevented the possibility of the paddle lifting the ball off the ground which may result in bouncing.

In actual use, two or more persons may each be provided with an impeller device and a ball impelled between them along a flat surface. This flat surface may be marked out similarly to a "Ping-pong" table and the ball itself may constitute a "Ping-pong" ball. The players may thus play singles or doubles in much the same manner as in tennis or "Ping-pong" impelling the ball back and forth between them along the smooth surface. Alternatively, a single person may manipulate the device to roll a ball off a backboard. Since the lower flared portion of the paddle **14** terminates short of the ground engaging foot **13**, there will be no interference in the swinging movement of the paddle when the lower end of the tube **12** engages the floor or ground.

By dimensioning the slot **32** to space the upper and lower edges **32***a* and **32***b* a sufficient distance apart, some play is provided in the downward movement of the shaft **10** before the lower side of the paddle bracket **21** engages the lower edge **32***b* of the slot. The user can thus provide a more or less snap action to the paddle by building up momentum of movement of the shaft **10** prior to outward swinging of the paddle structure itself. This action will enable the ball to be initially propelled with a greater speed than could be realized if initial movement of the shaft **10** immediately initiated outward swinging movement of the paddle.

From the foregoing description, it will be evident that the present invention has provided a greatly improved ball impelling device. The entire structure is extremely simple and employs a minimum number of component parts. It is to be noted that the tube **12** itself serves the dual function of guiding movement of the shaft **10** and, as a consequence of the elongated lateral slot therein, provides proper fulcrum edges for movement of the paddle bracket **21** to effect the desired swinging action of the paddle.

While only one particular embodiment of the device has been shown and described, it will be evident that various changes may be made that fall clearly within the scope and spirit of the invention. The improved ball impelling device is therefore not to be thought of as limited to the one embodiment set forth merely for illustrative purposes.

What is claimed is:

1. A ball impelling device comprising, in combination: a shaft; a tube telescopically receiving one end of said shaft and including a lateral slot; a paddle means; actuating means comprising a paddle bracket secured at one end to said paddle means and having its other end extending through said slot and pivotally connected to the lower end of said shaft, the lower edge of said slot serving as a fulcrum for said paddle bracket to cause pivoting movement of said paddle bracket upon inward telescoping movement of said shaft in response to downward pressure thereon to move said paddle means whereby a ball in front of said paddle means is impelled thereby; and a spring in said tube biasing said shaft in an upward direction to cause outward telescoping movement thereof to return said shaft to its initial position after cessation of said downward pressure.

2. A ball impelling device comprising, in combination: a shaft terminating at its upper end in an enlarged head portion and at its lower end in a bifurcated structure defining a shaft slot opening out said lower end and diametrically opposite side portions thereof; a tube terminating at its lower end in a ground engaging foot and telescopically receiving within its upper end said lower end of said shaft, said tube having a lateral slot cut in its sidewall defining upper and lower edges juxtaposed said shaft slot; a stop plug in the lower portion of said tube spaced below said lower end of said shaft; a spring disposed in said tube between said plug and said lower end of said shaft urging said shaft upwardly; paddle means exterior of said tube; a laterally extending paddle bracket secured to said paddle means at one end and passing through said tube slot to terminate within said shaft slot at its other end so as to be straddled by said bifurcated sturcture; and pin means passing through said bifurcated structure and paddle bracket to pivot said paddle bracket for arcuate swinging movement in a vertical plane, whereby downward telescoping movement of said shaft within said tube by applying downward pressure on said enlarged head portion causes the lower side of said paddle bracket to engage said lower edge of said tube slot to swing said paddle bracket upwardly and cause outward swinging movement of said paddle means, said spring urging said shaft upwardly upon cessation of said downward pressure to cause the upper side of said paddle bracket to engage said upper edge of said tube slot to swing said paddle bracket downwardly and cause retraction of said paddle means.

3. A ball impelling device according to claim 2, in which said paddle means extends downwardly from said paddle bracket to terminate in a flared area defining a ball engaging surface short of said foot so that swinging of said paddle does not interfere with any flat surface upon which said foot is positioned.

4. A ball impelling device according to claim 3, in which said paddle means includes reinforcing ribs on its back side opposite said ball engaging surface.

5. A ball impelling device according to claim 4, in which said ball engaging surface is tilted forwardly from a vertical plane when in its retracted position.

References Cited in the file of this patent

UNITED STATES PATENTS

747,646	Sandstrom	Dec. 22, 1903
2,518,913	Levi	Aug. 15, 1950

FOREIGN PATENTS

362,066	Great Britain	Dec. 3, 1931