United States Patent [19]

Suckley

[11] **Patent Number: Des. 320,986**

[45] **Date of Patent: ** Oct. 22, 1991**

[54] **RADIO TRANSMITTING HOUSING FOR A PORTABLE TELEPHONE OR SIMILAR ARTICLE**

[75] Inventor: **Michael Suckley,** Southampton, England

[73] Assignee: **Orbitel Mobile Communications Limited,** Bracknell, England

[**] Term: **14 Years**

[21] Appl. No.: **510,565**

[22] Filed: **Apr. 18, 1990**

[30] **Foreign Application Priority Data**

Oct. 19, 1989 [GB] United Kingdom 2001826

[52] **U.S. Cl.** **D14/144;** D14/155

[58] **Field of Search** D14/155, 137, 142; 379/440, 441, 62

[56] **References Cited**

U.S. PATENT DOCUMENTS

D. 259,423	6/1981	Root et al.	D14/137
D. 273,786	5/1984	Owerko	D14/155
D. 280,896	10/1985	Campbell	D14/155
D. 291,888	9/1987	Fong et al.	D14/155
D. 297,517	9/1988	Yuen	D14/155 X
D. 297,518	9/1988	Yuen	D14/155 X
D. 300,631	4/1989	Culbertson	D14/137
D. 301,476	1/1989	Scianna, Sr. et al.	D14/137 X
D. 303,115	8/1989	Hart et al.	D14/142
D. 306,583	3/1990	Krolopp et al.	D14/137
D. 307,426	4/1990	Ohta et al.	D14/142

Primary Examiner—Horace B. Fay, Jr.

Attorney, Agent, or Firm—Leydig, Voit & Mayer

[57] **CLAIM**

The ornamental design for a radio transmitting housing for a portable telephone or similar article, as shown and described.

DESCRIPTION

FIG. **1** is a left side, top and front perspective view of a radio transmitting housing for a portable telephone or similar article showing my new design;

FIG. **2** is a left side elevational view, the side opposite being a mirror image;

FIG. **3** is a plan view thereof; and

FIGS. **4** and **5** are respectively front and rear elevational views thereof.

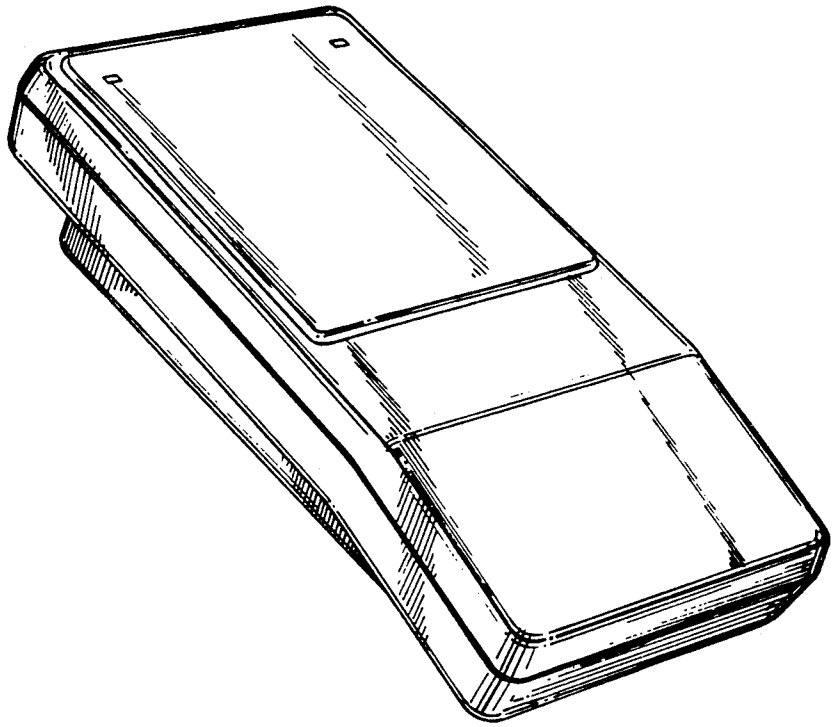

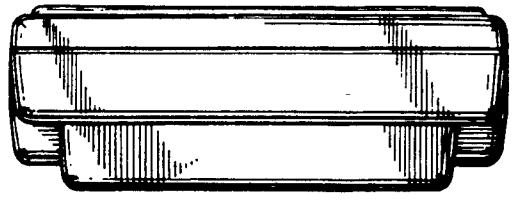

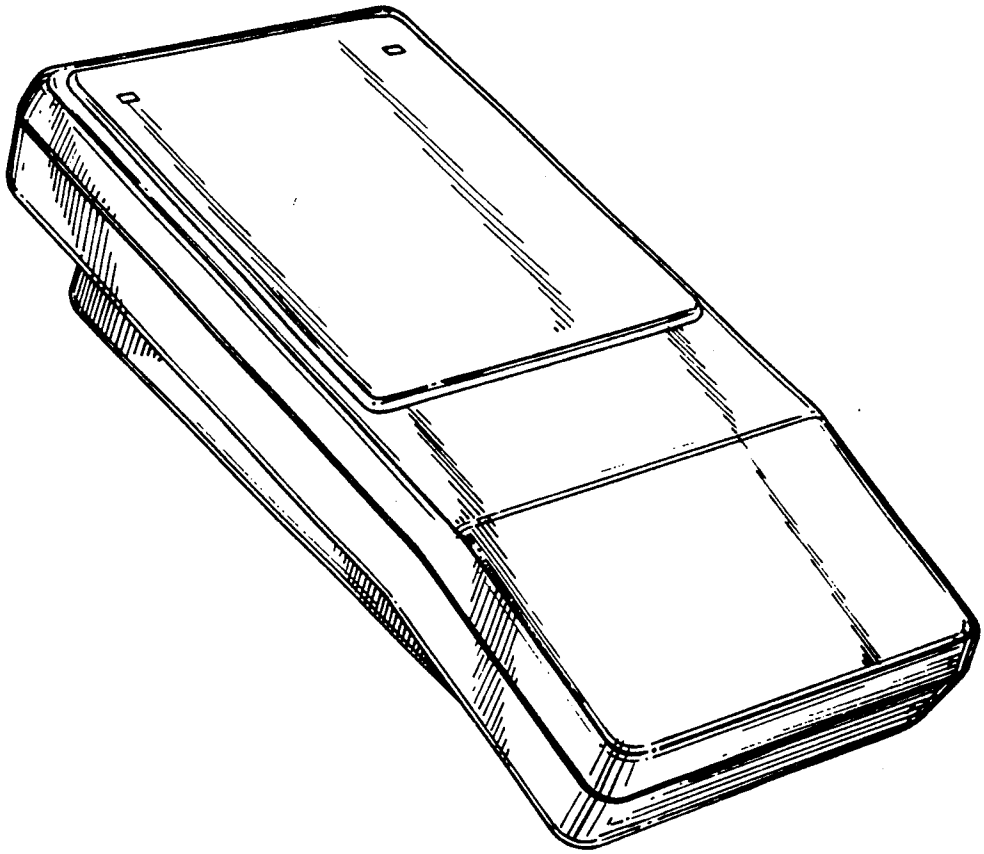

Fig.1.

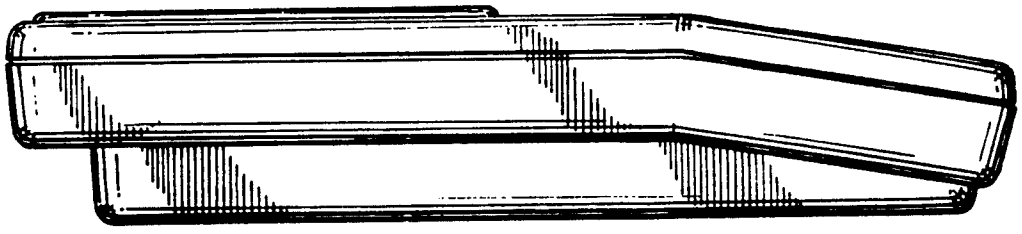

Fig.2.

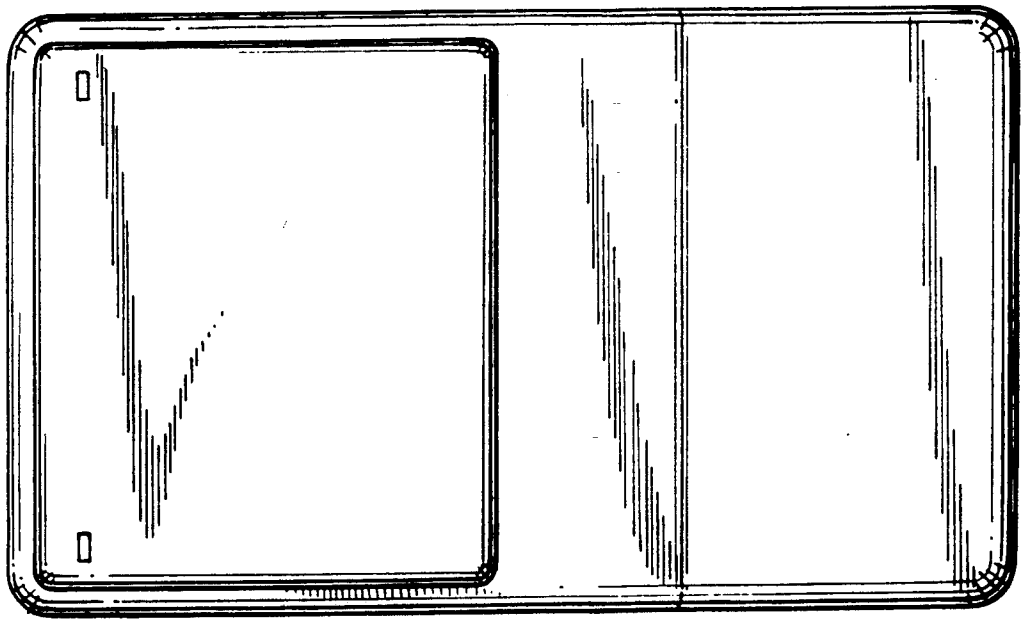

Fig.3.

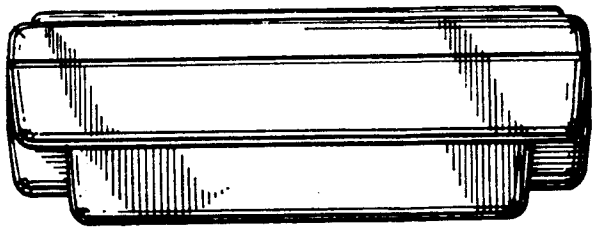

Fig.4.

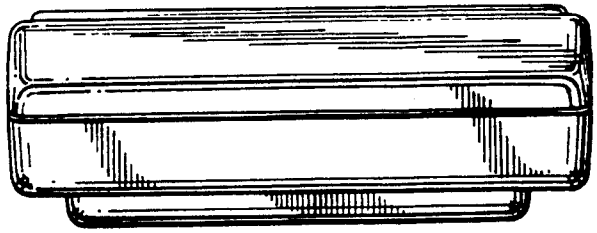

Fig.5.