United States Patent

Kisling, III

[15] **3,643,505**

[45] **Feb. 22, 1972**

[54] PROGRAMMED OFFSHORE FORMATION TESTERS

[72] Inventor: **James W. Kisling, III,** Houston, Tex.

[73] Assignee: **Schlumberger Technology Corporation,** New York, N.Y.

[22] Filed: **Feb. 2, 1970**

[21] Appl. No.: **2**

[52] **U.S. Cl.**.....**73/155,** 166/150, 166/152

[51] **Int. Cl.**.....**E21b 47/00**

[58] **Field of Search**.....73/151, 155; 166/150, 152; 137/514; 251/48, 54

[56] **References Cited**

UNITED STATES PATENTS

2,323,601 7/1943 Hobbs.....251/48 X

2,760,582 8/1956 Cutright.....166/152 X

Primary Examiner—Jerry W. Myracle

Attorney—Ernest R. Archambeau, Jr., David L. Moseley, Edward M. Roney, William R. Sherman and Stewart F. Moore

[57] **ABSTRACT**

In accordance with an illustrative embodiment of the present invention, an apparatus is described for making automatic formation evaluation tests in a well bore. To accomplish this, a formation tester is provided with timing means for controlling execution of various predetermined operations, such execution continuing from initiation to termination of the test with no requirement for operator intervention. The invention is of particular utility in an offshore environment wherein the continually changing elevation of the vessel with respect to the subsea well bore characteristically makes surface control difficult.

11 Claims, 3 Drawing Figures

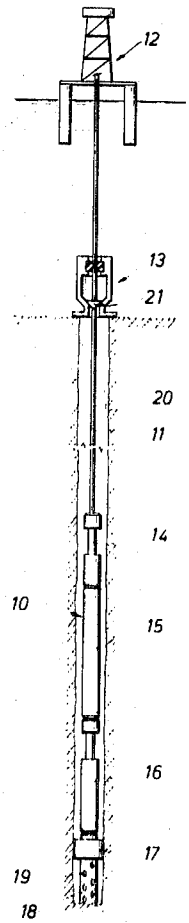

FIG. 1

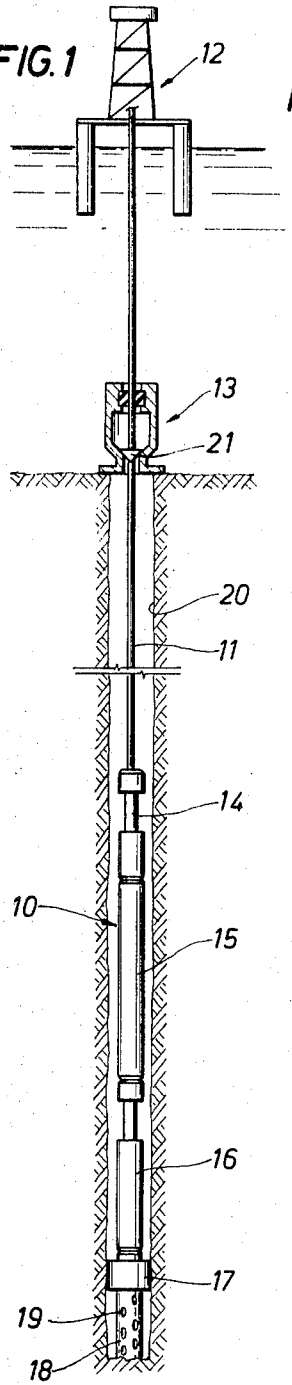

FIG. 2A

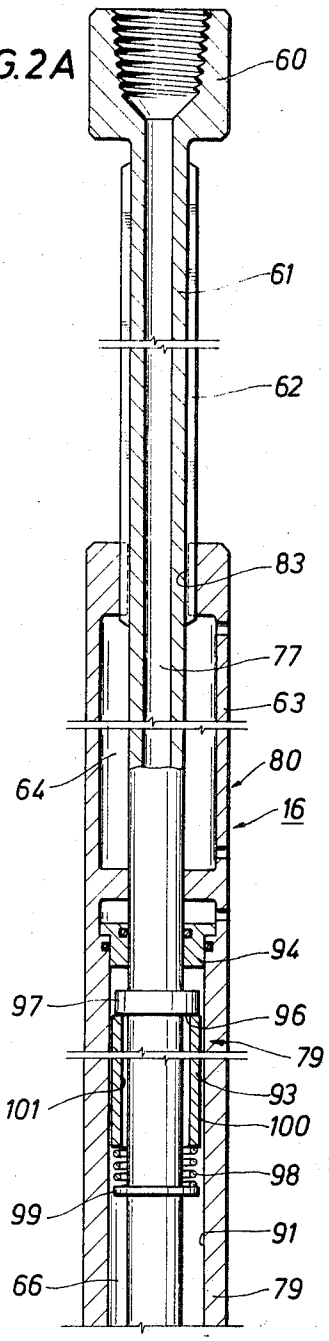

FIG. 2B

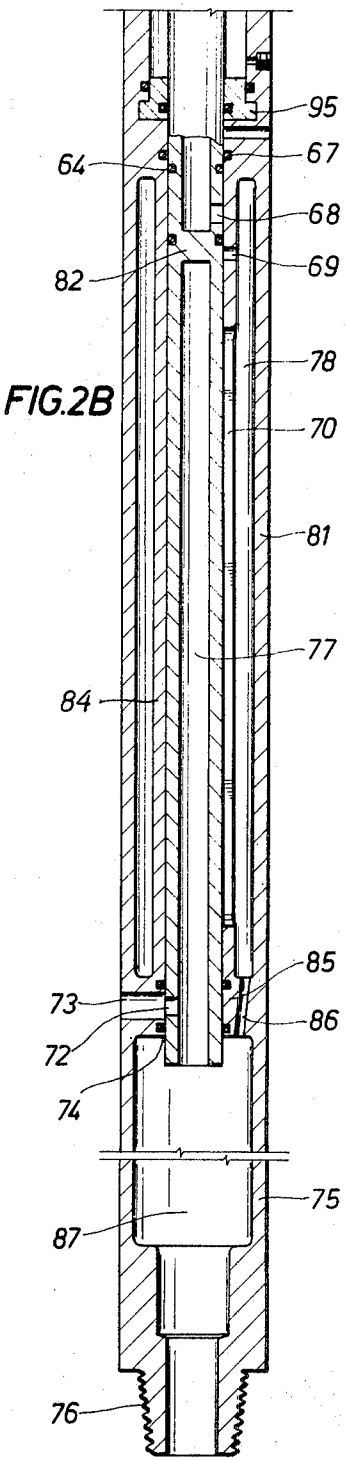

OPERATION SEQUENCE

0 - TEST VALVE CLOSED	BY-PASS	OPEN
*1 - INITIAL FLOW	BY-PASS	CLOSED
*2 - INITIAL SHUT-IN	BY-PASS	CLOSED
*3 - FINAL FLOW	BY-PASS	CLOSED
4 - FINAL SHUT-IN	BY-PASS	CLOSED

*SUM OF 1+2+3 EQUALS TIME CYCLE OF TOOL

James W. Kisling, III
INVENTOR

BY David L. Macaluso

ATTORNEY

PROGRAMMED OFFSHORE FORMATION TESTERS

This invention relates to formation testing apparatus for use in a well bore, and, more particularly, to formation tester apparatus that is programmed to make a formation test in a subsea well bore without the intervention of an operator.

Offshore drill stem tests are normally performed by lowering a string of tools including a testing tool and packer into the well bore to the desired depth at which the test is to be performed. Characteristically, the packer is set by applying the weight of the drill string, thereby isolating or packing off the formation to be tested. Subsequently, a test valve in the testing tool is opened by manipulating the pipe string to allow formation fluid to pass through the testing tool and drill string toward the surface. During the test, the force of the weight of the drill string and other elements such as drill collars is continuously applied to the packer so that the formation under consideration is effectively sealed off.

Great difficulty is encountered in conducting tests from a floating drilling vessel owing to the uncontrolled and essentially unpredictable motion of the floating vessel due to waves and tides. This occasions the need for constant supervision and manipulation by those conducting the test. The conventional systems characteristically employed in controlling the test, namely rotation of the drill string for opening and closing operations or longitudinal movement in both directions to control opening and closing of test valves have given rise to heretofore unresolved problems. In these systems, it is important, at all times, to have control over the pipe manipulations that are required to operate the tester while insuring that the packer remains seated. Since the floating vessel is constantly in motion with respect to the pipe string, it will be apparent that manipulations in order to conduct a test are not an easy matter. Particularly in systems applying the stroking technique to control the various stages of the test, undulating wave motion and the corresponding rising and falling of the floating vessel must at all times be taken into consideration and characteristically introduce uncertainty as to the longitudinal displacement required to successfully initiate the various operations of the test.

For reasons discussed hereinbefore, it has become highly desirable to devise a means by which a complete formation test may be set up or preprogrammed prior to the initiation of the test, i.e., completely determined prior to the lowering of the tools into the well bore. In so doing, it is necessary to provide a means by which the durations of the various operations of the test may be fixed absolutely and proportionately relative to one another. Execution of the various operations required in carrying out the test must be controlled by some reliable timing mechanism desirably contained completely within the testing tool.

In the preferred embodiment of applicant's invention, means are provided for controlling a timed sequence of operations defining a well test as follows:

1. First Time Interval - Initial Flow
2. Second Time Interval - Initial Shut-In
3. Third Time Interval - Final Flow
4. Fourth Time Interval - Final Shut-In.

The timed interrelationship of the periods of flow and shut-in enumerated above may be dependent upon several parameters whose definition varies according to the particular test to be performed. Within a given test's frame of reference, there may still be variables based upon well site information to consider. It is, therefore, necessary additionally to have the capability of varying the total amount of time required for a complete test as well as the time required for each period of flow and shut-in.

It is therefore an object of the present invention to provide a new and improved formation testing apparatus for conducting offshore subsea tests.

Another object of the present invention is to provide an apparatus for providing tests in a subsea open hole well bore wherein the various preprogrammed operations of the test are initiated and terminated without operator intervention.

A further object of the present invention is to provide a new and improved formation testing tool containing a means whereby time of the complete test may be predetermined at the surface or on the platform through the adjustment of a timing system contained within the tool.

With these and other objects in view, the present invention contemplates an apparatus for making offshore floating tests through the application of automatic preprogrammed timing for the various flow and shut-in periods of the test, removing the uncertainty which is inherent in systems requiring operator intervention. More particularly, the apparatus includes a series of tools, each including telescopically mounted members arranged to move between longitudinally spaced operating positions in a predetermined manner in such fashion as to establish a given time interval for each operation of the test to be performed. Determination of the optimum duration of each of the time intervals may be based upon prior knowledge of certain characteristics of the formations under consideration.

The apparatus includes a packer and an anchor, a programmed formation tester, drill collars for packer setting and tester operations, and a slip joint. Means are also provided for measuring pressure changes that occur in the isolated formation interval. The tester includes a mandrel telescopically disposed within a housing, a fluid passageway through which formation fluids may enter a central through-bore in the mandrel, a valve section in which there are located a system of flow ports which may be alternately opened and closed to fluid flow in response to longitudinal movement of the mandrel and a timing system comprising a pressure cylinder or piston attached to the mandrel and disposed within a fluid filled chamber such that the passage of the piston through the chamber in the downward direction is retarded and metered.

Drill collars are provided for the purposes of assuring that sufficient weight is applied downwardly to insure packer setting and to operate the tester. A slip joint is provided and includes means for insuring that weight is applied downwardly for a time equal to that required for the longitudinal displacement of the mandrel during the formation test.

In the preferred embodiment, a hydraulic delay system is provided for retarding the downward displacement of the mandrel so that a flow port within the mandrel is alternately brought into registry with longitudinally spaced, complementally disposed flow ports in the valve section of the housing. The time required for the mandrel to be displaced sufficiently so that it has traversed those portions of the housing containing the flow ports defines the times for initial and final flow. The time during which the mandrel is being displaced downwardly so that the flow port is in registry with neither of the flow ports within the housing and the time during which the mandrel has become fully seated correspond to the times of initial and final shut-in.

The novel features of the present invention are set forth with particularity in the appended claims. The present invention both as to its organization and manner of operation together with further objects and advantages thereof may best be understood by way of illustration and example of certain embodiments when taken in conjunction with the accompanying drawings, in which:

FIG. 1 is a view in elevation of a series of well tools suspended from a string of pipe and arranged for going in a subsea well through a subsea head; and

FIGS. 2A and 2B are cross-sectional views, with portions in side elevation, of the upper and lower portions of a formation tester, FIG. 2B forming a lower continuation of FIG. 2A.

Referring first to FIG. 1, a test string 10 is arranged to be connected to the lower end of a string of pipe or tubing 11 and suspended from the derrick of a conventional floating drilling rig 12 and extending through a subsea wellhead 13. The details of the subsea wellhead 13 form no part of the present invention and are fully described at page 3,730 of the 1968–1969 *Composite Catalog of Oilfield Equipment and Services*. The test string 10 includes a slip joint 14 depicted in midposition, drill collars 15 for packer setting, a programmed

formation evaluator or tester **16**, a packer **17** and a perforated anchor section **18**. The anchor carries conventional pressure recorders (not shown) and has perforations **19** in the wall of the anchor section to permit fluid to flow into a bore in the packer mandrel and up through the string of tools. Two pressure recorders can be provided, one recorder measuring pressure externally of the anchor and the other measuring pressure internally of the anchor.

In the operation of the formation testing apparatus, as shown in FIG. **1**, the assembled test string **10** is attached to the pipe **11** and lowered into the well bore **20** through the subsea head **13** and ultimately disposed adjacent to the formation to be tested. Bypass means within the tester permits fluids in the well bore to bypass through the packer section **17** as the tool is lowered into the well bore thereby permitting a more rapid descent of the tool into the well bore. When the perforated anchor section **18** is seated on the bottom of the borehole, further downward pressure on the tool will cause the elastomer packer section **17** to be expanded in the well bore to isolate the formation to be tested from the rest of the well bore. Formation fluids enter the tool through the perforations **19** in the anchor section **18** and flow upwardly to the formation tester section **16**. Valves in the tester section are opened and closed to flow and shut in the formation fluids. The recorders (not shown) housed in the anchor section are used to measure the pressure of the fluids during the flow and shut-in periods.

The packer **17** is of conventional design, the particular details of which are well known to those skilled in the art and form no part of the present invention. An example is shown in U.S. Pat. No. 3,308,887. The anchor or tail pipe **18** is also of conventional design and is coupled below the packer in conventional manner. Again, the details of design and of interaction or coupling between the two elements are well known to those skilled in the art.

Referring now to FIG. **2**, details of the tester section of the tool will be described. The tester section **16** includes a telescopically arranged mandrel **61** and housing **80**, such housing having an upper section **63**, a valve section **81** and a lower section **75**. The mandrel **61** has a threaded box portion **60** adapted for connection to the drill collars **15**, and has a central through-bore **77** formed therein. A closure plug or barrier **82** is located intermediate the length of the bore, and can be integral as shown or removable in a well-known manner. A test port **68** extends through the wall of the mandrel above the barrier **82**. Typical seals **64** are positioned above and below the test port **68**. The mandrel **61** is provided with an arrangement of longitudinally extending splines **62** which are slidably received within a corresponding or complementally arranged, longitudinally extending set of spline grooves **83** conjunctively assuring that the mandrel **61** is not subject to rotation as it is telescopically received within housing **80**.

The mandrel **61** is further provided with a timing system **79** disposed within a chamber **66** situated in the upper housing section **63** in such manner as to cause a timing action as the mandrel **61** moves downwardly into housing **80**. The timing system includes a piston **93** in the form of a sleeve between the cylinder wall and the mandrel **61**. The annular chamber **66** formed between the cylinder wall **91** and the mandrel **61** is filled with a hydraulic fluid and sealed by closure members **94** and **95** positioned at each end of the chamber **66**. The delay piston **93** abuts on one end against an upper annular valve seat **96** formed by a flange **97** on the mandrel **61**. A delay valve spring **98** is disposed between a lower flange **99** on the mandrel **61** and the lower end of piston **93**. Spring **98** normally urges the piston **93** toward the seat **96** on the valve seat flange **97**. The outer diameter of the piston **93** is less than the diameter of the wall **91** to form a restricted annular orifice **100**. Hence, as the mandrel **61** is moved downwardly relative to the housing **80**, the piston **93** seats on the valve seat flange **97** and the flow of hydraulic fluid is metered between the piston **93** and the cylinder wall through the restricted annular orifice **100**. This has the effect of delaying movement of the mandrel downwardly relative to the housing. Upon upward movement of the mandrel **61**, fluid pressure forces the piston **93** downwardly away from the valve seat **96** as the spring **98** is collapsed. A series of internal grooves **101** enables fluid to pass freely through the piston **93** so that the mandrel **61** can be elevated freely relative to the housing **80**.

Disposed immediately below the chamber **66** in the upper housing section **63** and sealingly separated therefrom by seals **67** is the valve section **81** of housing **80**. The valve section includes a concentrically disposed sleeve **84** defining a fluid passageway **78** and having flow ports **69** and **70** intermediate the fluid passageway **78** and the mandrel bore **77**. The valve section **81** is separated from the lower housing section **75** by a partition **85** having a flow port **86** so that fluids can flow upwardly into valve section **81** from the lower section **75**. The lower housing section **75** is provided with bore **87** into which formation fluids are introduced through perforations **19** in the anchor **18**. Within the lower housing section **75** is disposed a bypass port **73** which, during descent into the borehole, is brought into registry with mandrel port **72**, so that fluids in the borehole may pass freely through the packer **17**, thereby allowing a more rapid descent of the test tool. The lower housing section **75** is additionally provided with a threaded pin **76** to which may be connected the packer **17**.

The operation of the apparatus of FIGS. **1** and **2** may best be understood by considering the following discussion of the timed longitudinal downward passage of the mandrel **61**. Reference is made to operation sequence chart, shown in the drawings, wherein five states are indicated. The tool is depicted as being in the initial phase corresponding to 0 on the chart, wherein the valve section **81** is closed to fluid flow and bypass port **73** is in registry with mandrel port **72**. In this manner, the tool is lowered into the well bore and fluid is allowed to enter the packer and anchor section and pass upwardly through the lower housing section **75** and through bypass ports **72** and **73**, allowing a more rapid descent into the formation to be tested. As can be seen, the timing system **79** is not activated until the tool has been seated and is disposed at the top of chamber **66** during the descent.

FIG. **1** depicts the situation immediately after the packer **17** and anchor **18** have become seated and the packer expanded, the drill string **11** continuing in its downward passage until the slip joint **14** is fully collapsed, at which time the start of the timing sequence for the test occurs. Upon the telescoping of the slip joint **14**, all of the weight of the drill collars **15** is exerted in a downward direction so that the mandrel **61** is caused to begin its longitudinal passage into the housing **80**. The drill string **11** can have a landing flange **21** that seats in the subsea head **13** in order to suspend the drill string therefrom.

Referring now to FIG. **2**, the downward displacement of mandrel **61** occasions the registry of test port **68** with flow port **69** at which time fluid is allowed to pass from the fluid passageway **78** into the through-bore **77** and upwardly through the mandrel **61**. This is the first operation of the test and is indicated as Operation 1, Initial Flow, in the operating sequence chart shown in the drawing. Note that the bypass port **73** is blocked during this operation and subsequent operations.

Operation 2, Initial Shut-In, occurs as the mandrel **61** continues its downward motion and test port **68** is no longer in registry with the flow port **69**. Initial Shut-In continues for the length of time required for the test port **68** to again come into registry with the lower flow port **70**. Upon such registry, Operation 3, or the Final Flow, is initiated and continues during such time as may be required for mandrel **61** to completely traverse that portion of the valve section **81** having the port **70** through which fluid may flow from fluid passageway **78**.

Upon completion of the downward motion through that section above described, the final position of the mandrel **61** is reached and is indicated as Operation 4 or Final Shut-In. The mandrel's having become fully seated within the valve section defines the end of the test cycle.

In summary, the length of time required for the timing system 79 to complete its downward passage through chamber 66 is determined at the surface prior to initiation of the test. The tool is prepared for the test by programming the test tool for the desired time periods of Initial Flow, Initial Shut-In and Final Flow. The pipe string is also spaced out so the slip joint 14 will allow the collar weight to travel downward to operate the various valve stages and apply weight to the packer. The test string is then lowered into the hole and the upper end of the pipe string is landed in the subsea head and the weight of the drill collars 15 activates the packer 17 and the tester 16. The test can be terminated at any time by picking straight up. This closes the test valve and opens the bypass. Slacking off once more starts the time cycle from the beginning position.

Various means may be employed to accomplish the preprogramming of applicant's invention. In order to vary the time required for completion of one cycle or test, the rate of descent of the pressure piston may be adjusted by increasing or decreasing the width of the metering passage formed between the outer diameter of the piston and the inner diameter of the cylinder wall. An additional means of effecting changes in the metering rate is that of varying the weight or viscosity of the fluid within the metering chamber.

In order to adjust or to reallocate the testing time among the different operations comprising the test, changes may be made in the longitudinal extent or length of the various flow ports, i.e., any of the plurality of ports which may be provided in the valve section of the housing or that which is found in the mandrel. For example, removable sleeves in which flow ports of varying length are found may be substituted one for another under changing test conditions.

While particular embodiments of the present invention have been shown and described, it is apparent that changes and modifications may be made without departing from this invention in its broader aspects and, therefore, the aim in the appended claims is to cover all such changes and modifications that fall within the true spirit and scope of this invention.

I claim:

1. A well tester apparatus comprising: an inner member telescopically disposed within an outer member and movable longitudinally relative thereto, said members having a fluid passageway; valve means responsive to longitudinal movement of said members for opening said passageway to fluid flow for a first preselected time interval and then closing said passageway to fluid flow for a second preselected time interval; and timing means for controlling the rate of longitudinal movement of said inner member within said outer member to fix the respective durations of said time intervals.

2. The apparatus of claim 1 wherein said valve means includes a first flow port and a second flow port within said outer member for controlling the flow of fluid through said passageway, said ports being axially disposed with respect to one another in such relative position as to permit flow through said passageway alternatively via either of said flow ports.

3. The apparatus of claim 2 wherein said valve means includes means for permitting the opening of said fluid passageway for a third preselected time interval in response to continued longitudinal movement of said inner member within said outer member.

4. The apparatus of claim 3 wherein said inner member has a third flow port disposed to enter into alternative registry with said first and second flow ports within said outer member.

5. The apparatus of claim 3 wherein said longitudinal movement of said inner member is in the downward direction only and wherein said inner member includes a third flow port disposed to enter into sequential registry with said first and second flow ports during such downward passage.

6. The apparatus of claim 5 wherein said timing means comprises a piston means on said inner member disposed within a fluid filled chamber, and means for providing a metered descent of said piston means through said chamber.

7. A well tester apparatus comprising: an inner member telescopically disposed within an outer member and movable longitudinally relative thereto between extended and contracted positions, said members having a fluid passageway; means for preventing rotation of said inner member within said outer member; valve means including longitudinally spaced flow ports in one of said members positioned for alternate registry with a flow port in the other of said members, said valve means being responsive to downward movement of said inner member for alternately opening and closing said passageway for a plurality of preselected time intervals; and timing means for controlling the rate of downward movement of said inner member to fix the respective durations of said time intervals.

8. A well tester apparatus comprising: an inner member telescopically disposed within an outer member said inner member being adapted for longitudinal movement relative to said outer member in response to downward force applied to said inner member, said members having a fluid passageway; means on said inner and outer members for preventing relative rotation therebetween; means for limiting longitudinal movement of said inner member; piston means on said inner member disposed within a fluid filled chamber within said outer member for retarding and metering longitudinal movement of said inner member to provide a timing system, said fluid filled chamber being sealingly separated from the remainder of said outer member; valve means controlled by said timing means and responsive to longitudinal movement of said inner member for opening and closing said fluid passageway to fluid flow for a plurality of preselected time intervals, said valve means including a sleeve fixed to said outer member and surrounding said inner member and forming an annular space between said members that provides a portion of said fluid passageway, said valve means further including a first flow port in said inner member; a plurality of longitudinally spaced flow ports within said outer member adapted for registry with said first flow port and so disposed as to enter sequentially into registry with said first flow port during the downward motion of said inner member; and bypass means for selectively equalizing the pressure of fluids in said passageway with the pressure of fluids in the well annulus surrounding said members.

9. Apparatus for making an offshore drill stem test from a floating drilling vessel comprising: an inner member telescopically disposed within an outer member and movable longitudinally relatively thereto between extended and contracted positions, said members having a fluid passageway; valve means responsive to longitudinal movement of said inner member for periodically opening and closing said passageway to fluid flow in a predetermined timed sequence of operations, said sequence of operations defining a cycle for said drill stem test; timing means for controlling the rate of longitudinal movement of said inner member within said outer member to cause said longitudinal movement to occur at a uniform rate, thereby fixing the respective durations of the periodic openings and closings of said passageway; a pipe string having upper and lower portions; means for connecting said inner member to the lower portion of said pipe string; and means in said pipe string to enable longitudinal relative movement between said portions of said pipe string by an extent at least equal to the extent of movement of said inner member within said outer member.

10. A well tester apparatus comprising: packer means for isolating a formation interval to be tested; anchor means coupled to said packer means for locating said packer means at a selected elevation in the borehole; tester means coupled to said packer means and including an inner member movable downwardly within an outer member, said inner member having a fluid passageway; valve means responsive to downward movement of said inner member for opening said passageway to fluid flow for a first preselected time interval and then closing said passageway to fluid flow for a second preselected time interval; pressure recorder means associated with said well tester apparatus for recording changes in the pressure of fluids in the well bore below said packer means as a function of time;

and timing means for controlling the rate of downward movement of said inner member within said outer member to fix the respective durations of said time intervals.

11. A well tester apparatus comprising: packer means for isolating a formation interval to be tested, said packer means including expansible means for sealing off the formation from fluids contained in the borehole; anchor means connected to said packer means for locating said packer means at a selected station in the borehole; pressure recording means in said well tester apparatus for recording the pressure of fluids in said interval; tester means including an inner member telescopically disposed within an outer member, said inner member being movable downwardly within said outer member in response to downward force applied to said inner member; said members having a fluid passageway; means on said members for preventing relative rotation of said members; means for limiting longitudinal movement of said members; piston means on said inner member and disposed within a fluid filled chamber within said outer member for retarding and metering the downward longitudinal movement of said inner member to provide a timing system insuring a constant rate of downward movement of said inner member, said chamber being sealingly separated from the remainder of said outer member; valve means responsive to downward movement of said inner member for opening and closing said fluid passageway to fluid flow for a plurality of preselected time intervals, said valve means including a sleeve fixed to said outer member and surrounding said inner member and forming an annular space between said inner and outer members that provides a portion of the said fluid passageway, said valve means further including a first flow port in said inner member, a plurality of flow ports in said outer member adapted for registry with said first flow port and so disposed as to enter sequentially into registry with said first flow port during movement of said inner member; and bypass means responsive to upward movement of said inner member for selectively equalizing the pressure of fluids in the well bore above and below said packer means.

* * * * *