July 23, 1968 R. N. NEALIS 3,394,365

PANTOGRAPH SHOES AND CONDITION INDICATOR

Filed Nov. 17, 1966 2 Sheets-Sheet 1

FIG. 1

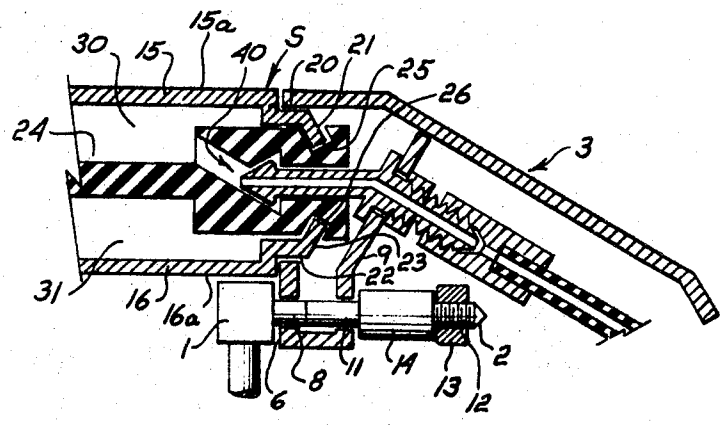


FIG. 2

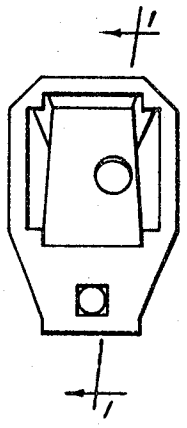


FIG. 3

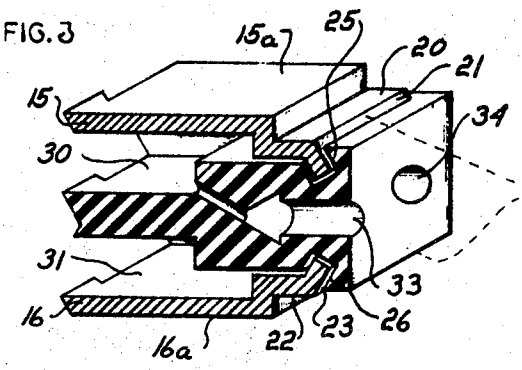


FIG. 4

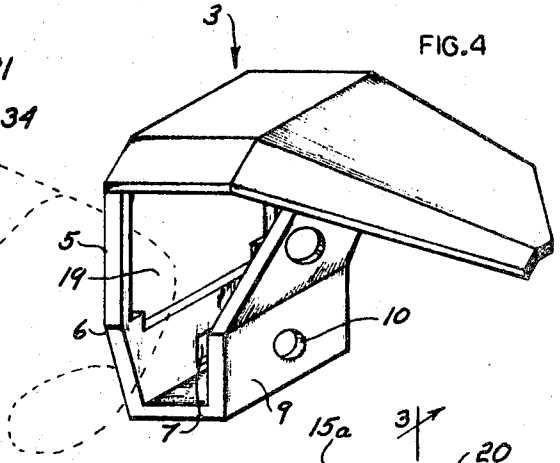


FIG. 5

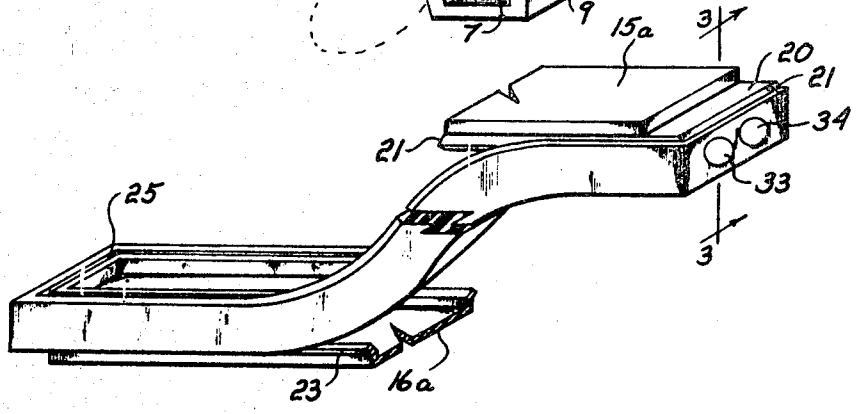


INVENTOR

Raymond N. Nealis

BY

Frederick J. Olsson

ATTORNEY

July 23, 1968 R. N. NEALIS 3,394,365

PANTOGRAPH SHOES AND CONDITION INDICATOR

Filed Nov. 17, 1966 2 Sheets-Sheet 2

FIG. 6

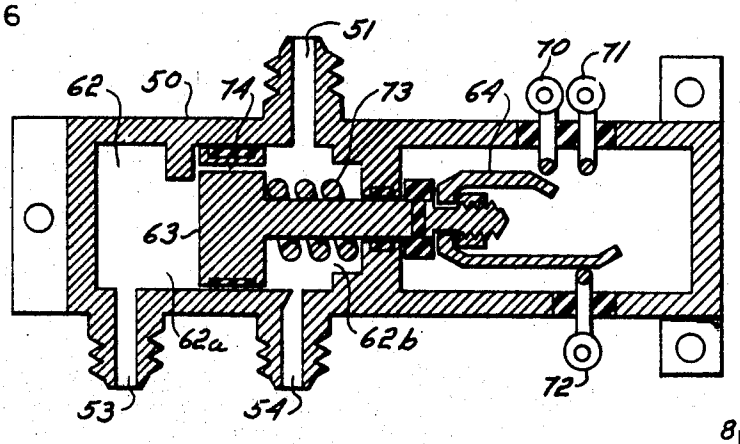


FIG. 7

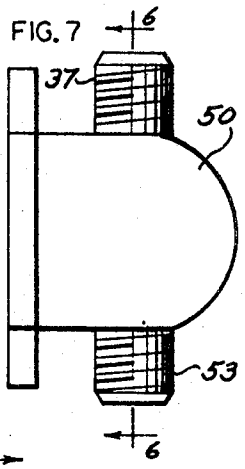


FIG. 8

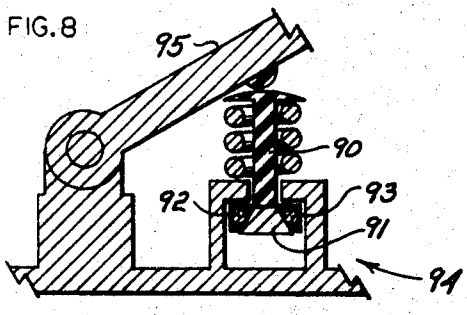


FIG. 9

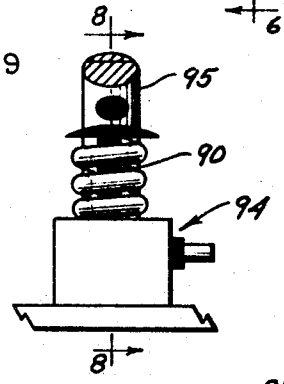


FIG. 10

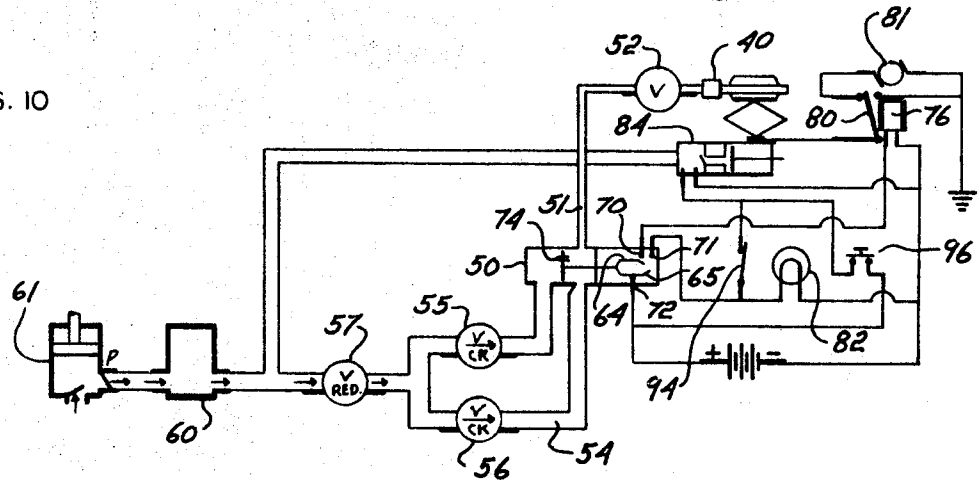


INVENTOR.
Raymond N. Nealis
BY
Frederick J. Olsson
ATTORNEY

United States Patent Office 3,394,365 Patented July 23, 1968



3,394,365

# PANTOGRAPH SHOES AND CONDITION INDICATOR

Raymond N. Nealis, 11 Harvest Road, Levittown, Pa. 19056

Filed Nov. 17, 1966, Ser. No. 595,140
5 Claims. (Cl. 340—213)

## ABSTRACT OF THE DISCLOSURE

The invention relates to pantograph-mounted shoes for electrified railway cars and contemplates a shoe and means to move the shoe to engage and disengage the trolley wire together with mechanism operative to automatically detect a wear hole in the shoe and cause an indicator to warn of the condition and/or cause the pantograph to move the shoe away from the trolley wire.

This invention relates to pantograph-mounted shoes used on electrified railway cars for transferring electrical energy between the overhead trolley wire and the car.

In one aspect the invention concerns an improved shoe and detecting mechanism cooperating therewith to automatically detect a wear hole in a shoe and cause the pantograph to operate to move the shoe down away from the trolley wire.

In another aspect the invention concerns an improved shoe and detecting mechanism cooperating therewith to automatically detect a wear hole in a shoe and cause indicator means to operate to warn of the presence of a wear hole.

In another aspect the invention contemplates improvements of the kind mentioned wherein the pantograph and worn shoe are automatically locked in the "down" position but having means providing for manual operation of the worn shoe for emergency conditions.

In another aspect the invention contemplates improvements of the kind in question including safety mechanism which will prevent shoe disconnection under conditions of low clearance between the overhead trolley wire and the car top so as to avoid severe arcing that otherwise could take place.

In another aspect the invention contemplates an improved shoe, the wear or contact surface of which forms part of a pressurized air chamber which a wear hole will connect to atmosphere and the change in pressure being sensed by means to cause the pantograph to move the shoe down away from the trolley wire.

In another aspect the invention contemplates an improved shoe structure comprising a pair of shoes one of which is in contact with the overhead trolley wire and the other in condition so that it can be readily activated to replace the shoe in contact with the trolley wire when a wear hole appears.

A preferred construction of the invention will be described below in connection with the following drawings, wherein:

FIGURE 1 is a side elevational sectional view taken along the lines 1—1 of FIGURE 2 and illustrating the improved shoe structure of the invention;

FIGURE 2 is an end view of the improved shoe structure of the invention;

FIGURE 3 is a perspective elevational view partially in section of certain portions of the shoe structure of FIGURE 1;

FIGURE 4 is a perspective view of certain of the components of FIGURE 1;

FIGURE 5 is a perspective view of certain of the components of the structure shown in FIGURE 1 and illustrating a manner of disassembly;



FIGURE 6 is a side elevational view taken along the lines 7—7 of FIGURE 7 and illustrating air pressure detecting mechanism;

FIGURE 7 is an end elevational view of the detecting mechanism of FIGURE 6;

FIGURE 8 is a side elevational sectional view taken along the lines 8—8 of FIGURE 9 and illustrating a safety interlock preventing operation of the pantograph under low clearance conditions;

FIGURE 9 is an end view of the safety device of FIGURE 8;

FIGURE 10 is a schematic diagram illustrating the manner in which the invention is incorporated into the air and electrical systems of a conventional railway car.

In FIGURE 1 the shoe structure S is mounted on top of the conventional pantograph equipment by means of the elongated block **1** attached to the pantograph. The shoe structure extends with the pantograph structure transversely of the car wherein a similar block (not shown) is connected to the opposite side of the pantograph.

The block **1** carries a threaded stud **2** upon which is slidably mounted U-shaped side support **3** (FIGURE 4), the surface **4** of which constitutes a horn. A similar side support on the opposite side of the car is fixedly mounted on the pantograph. The inside leg **6** of the slidable side support **3** has a rectangular aperture **7** which is disposed over the rectangular section **8** of the stud **2**. The outside leg **9** of the side support has a round aperture **10** which fits over the cylindrical section **11** of the stud **2**. The threads **12** on the outer end of the stud carry a nut **13** which bears on the spacing sleeve **14** and secures the side support up against the block **1**. A similar stud and nut arrangement with the sleeve omitted is used for mounting the fixed side support.

The shoe mechanisms **15** and **16** extend between the side supports and are identical in construction. The outside portion **15***a* of the shoe **15** and the outside portion **16***a* of the shoe **16** constitute wear plates. These plates **15***a* or **16***a* contact the overhead trolley wire depending upon which of the shoes occupies the top position.

The shoe **15** has a peripheral shoulder **20** and an outwardly extending flange **21**. The shoe **16** has a peripheral shoulder **22** and an outwardly extending peripheral flange **23**.

Interposed between the shoes **15** and **16** is a rubber divider member **24** which has a peripheral slot **25** accommodating the flange **21** and a peripheral slot **26** accommodating the flange **23**. The shoes **15** and **16** are assembled to the rubber divider one at a time. For this purpose the divider is distorted so that the flange **21** of the shoe **15** can be progressively inserted into the slot **25**. When this is done the shoe **16** is similarly joined to the divider.

The shoulders **20** of the shoe **15** and the shoulder **22** of the shoe **16** are adapted to fit into the receiving aperture **19** in the inside leg **5**. The parts are dimensioned so that a precise fit is effected.

The composite structure is mounted on the pantograph as described following:

First the fixed side support is secured to the pantograph. Then the shoe-divider assembly is inserted into the receiving apertures of the fixed side support. The slidable support is impaled on the stud **2** and moved so that its receiving aperture engages the shoulder of the shoe-divider assembly. The sleeve **14** is impaled on the stud and then the nut **13** is placed on threads **12** and tightened up to secure the side support against the block **1**.

As will be apparent, the shoe **15** and the rubber divider **24** constitute a chamber **30**, and the shoe **16** and the rubber divider constitute a chamber **31**. The flanges **21**

and 23 and the slots 25 and 26 are designed to make an air tight engagement and provide that the pressure in chambers 30 and 31 can be maintained above atmosphere.

The head 32 of the rubber divider (FIGURE 3) has a pair of apertures 33 and 34. The aperture 33 is connected to the chamber 30 as shown in FIGURE 3, and the aperture 34 is connected to the chamber 31.

The apertures 33 and 34 are adapted to alternatively accommodate a nipple structure generally indicated by 40. In the position of the parts as indicated in FIGURE 1 the nipple structure 40 is accommodated by the aperture 33.

When air is introduced into one of the chambers, say chamber 30, the rubber divider will distend and draw the rubber forming the slot 25 tight on the shoulder 21 so that chamber 30 is air tight.

One of the features of the invention is the quick replacement of a damaged shoe. Thus, when a wear hole appears in the shoe 15, the shoe 16 can be quickly substituted. For this purpose the side support 3 and nipple structure 40 are drawn back along the stud. Then the assembly comprising the shoes 15 and 16 and the divider 24 is pulled out of the receiving aperture in the fixed side support and turned 180°. The shoe-divider assembly is then reinserted in the fixed side support with the shoe 16 on the top and the shoe 15 on the bottom. The side support 3 is moved along the stud so that the receiving aperture engages the shoulders of the shoe-divider assembly and the nipple structure 40 enters into the aperture 34. The nut 14 is tightened up to secure the side support against the block 1.

When the assembly as shown in FIGURE 1 is secured on the pantograph the shoe 15 is in condition for contacting the overhead trolley wire. Under these conditions the pressure in chamber 30 is maintained above atmosphere, and if a hole appears in the wear surface 15*a* a leak will develop in the chamber and the pressure will be reduced. A reduction in pressure in the chamber is detected. The circuit between the overhead trolley wire and traction motor is opened. An indicating device is energized to warn of the wear hole condition and cut off power to traction motor. The control mechanism for the pantograph is energized to cause the same to lower away and disengage the shoe and the trolley wire.

In FIGURE 6 I have shown a mechanism for maintaining the desired pressure in the chamber 30 or 31 and for detecting any change in pressure and initiating the above functions.

The housing 50 has a port 51 which is connected (see FIGURE 10) to a shut off valve 52 feeding the nipple 40. The valve is located at a convenient place on the car so that it can be easily operated to admit or prevent air flow to the chambers. The housing 50 also has ports 53 and 54, which are connected through check valves 55 and 56 and thence through a reducing valve 57 to the railway car air reservoir 60 connected to an air compressor 61 which supplies air to the system.

The housing 50 is formed with a chamber 62 mounting a piston 63. The piston supports a pair of spring-loaded metal contacts 64 and 65 insulated from the piston. Contact 65 is in constant sliding electrical contact with terminal 72. A spring 73 biases the piston toward the position shown in FIGURE 6. When the piston 63 is moved to the right the contact 64 serially engages the terminals 70 and 71. The piston 63 is provided with a leak feeding port 74.

Under normal conditions; i.e., with no wear holes in the plate 15*a* (or 16*a*), the air pressure in chambers 62*a* and 62*b* is the same, the spring bias causes the piston 63 to assume the position as shown in FIGURE 6. When a wear hole appears in the plate 15*a* and the chamber is connected to atmosphere, the air pressure on opposite sides of the piston becomes unbalanced; that is to say, the pressure in chamber 62*a* becomes greater. The force on the piston due to the greater pressure in chamber 62*a* moves the piston toward the right into chamber 62*b* to engage the contact 64 with the terminals 70 and 71 and completing an electric circuit from contact 72.



When the piston moves over toward the right, the port 54 is closed. However, the respective axial positions of the ports 51 and 54 are set up so that the port 51 remains partially open. The air flowing through the port 74 then feeds the chamber 62*b* and the shoe chamber. The drop across the port 74 maintains the pressure in 62*b* less than the pressure in 62*a* so that the piston remains over to the right. When the valve 52 is shut off the port 74 permits the pressure in 62*b* to balance the pressure in 62*a* so that the spring will move the piston to the left.

The effect of the contact 64 engaging the terminals 70 and 71 will be explained in connection with FIGURE 10.

The terminal 72 is connected to a power source 75, and when the contact 64 engages the terminal 70, power is supplied to a motor cut out relay 76 which operates a switch 80 to cut off the power supply to the traction motor 81. With the current drawing source out of the circuit, the pantograph and shoe can be lowered away from the overhead trolley wire without serious arcing.

When the contact 64 engages the terminal 71, the indicator device 82 is connected to the power source. The indicator may take the form of visible means such as a light or audible means such as an alarm.

As will be apparent to those skilled in the art, the relay 76, switch 80, motor 81, control device 84, and switch 85 are all conventional standard components on a railway car pantograph operating system. By the modifications noted above, the invention is integrated into the standard system to provide for either automatic lowering of the pantograph or indication followed by manual lowering.

Under certain conditions in railway car operation the clearance between the trolley wire and the shoe with the pantograph in down position would be insufficient to prevent arcing. Therefore, the invention contemplates a low trolley wire switch which will prevent automatic lowering of the pantograph when the above conditions are present.

The low trolley wire switch is shown in FIGURES 8 and 9 and comprises a spring loaded plunger 90 having a contact 91 which is adapted to make and break with the terminals 92 and 93. The contact 91 and terminals 92 and 93 form a normally closed switch 94 which as shown in FIGURE 10 is in the power circuit to the pantograph control device 84. The topmost position of the plunger is chosen so that if the pantograph arm 95 moves down to the point where it engages the plunger and opens the switch 94, the power circuit to the control device 84 is interrupted. Thus even if the detecting mechanism operates for automatic lowering of the pantograph, the same cannot take place because the switch 94 is open.

This does not effect the electrical circuit to lower the pantograph through use of the conventional pantograph down button shown in FIGURE 10 as switch 96.

When clearance conditions permit closing of switch 94, the invention is immediately operative as heretofore described.

As will be understood by those skilled in the art, it is preferable that means be provided to insure a positive conducting path for the transfer of power from the shoes. For this purpose I use a braided pigtail having a terminal which is placed on the rectangular section 8 of the stud 2 between the block 1 and the end support. The pigtail extends as shown by the dotted lines between FIGURES 3 and 4 up between the legs 6 and 9 from which one part goes to the flange 21 and another portion to the flange 23. On each flange is a U-shaped clip which is secured to the pigtail. As will be apparent the pigtail accommodates the rotation of the shoe-divider assembly when changing shoes. For purposes of clarity, I have not included the details of the foregoing structure in the drawings.

I claim:

1. In combination:

a shoe formed with a wear plate for engaging an overhead trolley wire for the transfer of electrical power;

means supporting said shoe and constructed to move the shoe to an operative position wherein the wear plate engages the overhead trolley wire and to an inoperative position wherein the wear plate is spaced away from the trolley wire; and

mechanism connected with said wear plate and operative to detect a hole extending through the wear plate and to cause said support means to move the shoe to the inoperative position, said wear hole being caused by the engagement of the wear plate with the overhead trolley wire.

2. In combination:

a shoe formed with a wear plate for engaging an overhead trolley wire for the transfer of electrical power;

means supporting said shoe and constructed to move the shoe to an operative position wherein the wear plate engages the overhead trolley wire and to an inoperative position wherein the wear plate is spaced away from the trolley wire;

indicator means; and

mechanism connected with said wear plate and operative to detect a hole extending through the wear plate and to cause said indicator means to operate to indicate the appearance of a hole in said plate.

3. In combination:

a shoe including means forming an air chamber one side of which includes a wear plate for engaging with an overhead trolley wire for the transfer of electric power;

means supporting said shoe and constructed to move the shoe to an operative position wherein the wear plate engages the overhead trolley wire and to an inoperative position wherein the wear plate is spaced away from the trolley wire;

control mechanism connected with said support means for causing the same to move said shoe to the operative position and to the inoperative position;

means connected with said air chamber to supply and maintain a predetermined pressure therein; and

air pressure sensing mechanism connected between the air chamber in said shoe and the control mechanism to detect a reduction in air pressure in the chamber and to cause said control mechanism to control the support means to move a shoe which is in the operative position to the inoperative position, the change of air pressure being the result of the escape of air through a wear hole in the wear plate caused by the engagement of the plate with the overhead trolley wire.



4. In combination:

a shoe including means forming an air chamber one side of which includes a wear plate for engaging with an overhead trolley wire for the transfer of electric power;

means supporting said shoe and constructed to move the shoe to an operative position wherein the wear plate engages the overhead trolley wire and to an inoperative position wherein the wear plate is spaced away from the trolley wire;

control mechanism connected with said support means for causing the same too move said shoe to the operative position and to the inoperative position;

means connected with said air chamber to supply and maintain a predetermined pressure therein;

indicator means; and

air pressure sensing mechanism connected between the air chamber in said shoe to detect a reduction in air pressure in the chamber and to cause said indicator means to operate to indicate the appearance of a hole in said shoe, the change of air pressure being the result of the escape of air through a wear hole in the wear plate caused by the engagement of the plate with the overhead trolley wire.

5. In combination:

improved shoe structure comprising an elongated shoe having a peripheral flange;

a second shoe having a peripheral flange;

a rubber divider between said shoes one side of which is formed with a slot accommodating the flange of first said shoe and the other side of which has a slot accommodating the shoulder of second said shoe, the rubber divider and one of said shoes forming an air chamber, and the rubber divider and the other said shoe forming a second air chamber; and

means on one end of said divider forming two air passages, one of which is connected to one of the chambers and the other of which is connected to the other chamber.

**References Cited**

UNITED STATES PATENTS

| | | | |
|---|---|---|---|
| 2,629,862 | 2/1953 | Sawyer | 340—213 |
| 2,691,114 | 10/1954 | Lykins | 340—267 XR |
| 2,700,760 | 1/1955 | Brown | 191—45 XR |


ARTHUR L. LA POINT, *Primary Examiner.*

S. T. KRAWCZEWICZ, *Assistant Examiner.*