United States Patent [19]

Chilton et al.

[11] **3,819,976**

[45] **June 25, 1974**

[54] **TA-AL ALLOY ATTENUATOR FOR TRAVELING WAVE TUBES AND METHOD OF MAKING SAME**

[75] Inventors: **John Michael Chilton,** Coopersburg; **Donald Jaffe,** Emmaus, both of Pa.

[73] Assignee: **Bell Telephone Laboratories, Incorporated,** Murray Hill, Berkley Heights, N.J.

[22] Filed: **May 11, 1973**

[21] Appl. No.: **359,462**

[52] **U.S. Cl.** **315/3.5,** 315/3.6, 333/22

[51] **Int. Cl.** **H01j 25/34**

[58] **Field of Search** 315/3.5, 3.6; 333/22

[56] **References Cited**

UNITED STATES PATENTS

3,368,103	2/1968	Thall	315/3.5
3,474,284	10/1969	Anand	315/3.5
3,544,832	12/1970	Brous	315/3.5
3,548,345	12/1970	Falce	315/3.5

Primary Examiner—James W. Lawrence
Assistant Examiner—Saxfield Chatmon, Jr.
Attorney, Agent, or Firm—M. J. Urbano

[57] **ABSTRACT**

The high frequency attenuator in a traveling wave tube and in other devices, in which the attenuator is disadvantageously subject to electron and/or ion bombardment, comprises an alloy coating of tantalum and aluminum. Also described is a process of fabricating such coatings in which the alloy is sputtered from a planar cathode comprising an aluminum plate and a perforated tantalum plate mounted on the aluminum plate.

6 Claims, 3 Drawing Figures

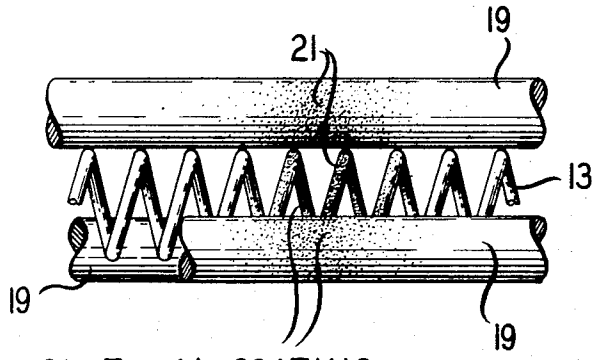

21: Ta-AL COATING

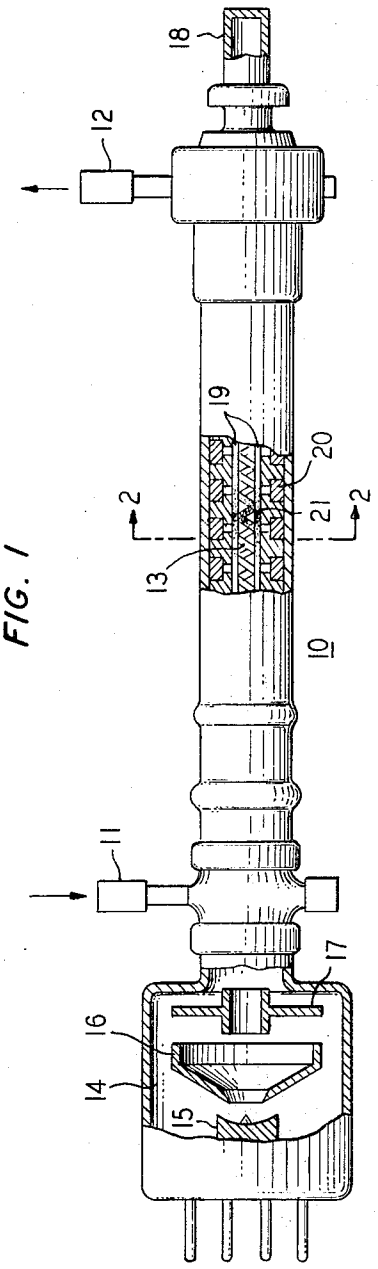

FIG. 1

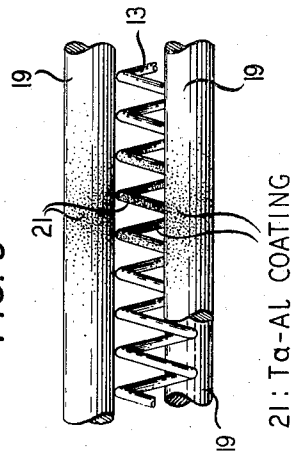

FIG. 3

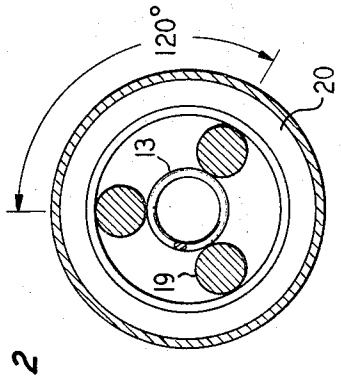

FIG. 2

TA-AL ALLOY ATTENUATOR FOR TRAVELING WAVE TUBES AND METHOD OF MAKING SAME

BACKGROUND OF THE INVENTION

This invention relates to radio-frequency attenuation devices, and more particularly to the attenuation of reflected radio-frequency energy in traveling wave tubes.

In a traveling wave tube, an electron beam is projected in close proximity to a slow-wave structure, such as a conductive helix, with interaction taking place between the electron beam and the field of an electromagnetic wave propagating on the helix. With the helix many wavelengths long at the operating frequency, the cumulative interaction between the electron beam and the field of the wave results in a transfer of energy from the beam to the field of the wave, thereby amplifying the wave.

While the advantages of traveling wave tubes are well recognized, and the tubes widely used, it is also recognized that the device can become unstable, that is oscillate, if energy propagation along the helix is not carefully controlled. The major cause of instability in a traveling wave tube is the reflection of electromagnetic wave energy due to impedance mismatches in the output section of the helix. Subsequent and repeated reflections, of course, cause oscillations in the tube. These reflected waves are usually suppressed by an attenuation coating along part of the helix. It is common practice to include on part of the helix a lossy material, typically a thin coating of graphite or carbon composition, which absorbs and dissipates the reflected wave energy. The input signal energy is maintained through the loss section because at that location much of the input signal wave energy exists on the beam as space-charge waves and can therefore propagate freely. It has been observed, however, that the loss characteristics in tubes of this type tend to deteriorate in time, such deterioration being the result of sustained electron and ion bombardment of the attenuation coating. The deterioration of the loss characteristics causes the traveling wave tube to self-oscillate and thus renders it completely useless.

In a long life and high gain traveling wave tube it is particularly important that the helix loss characteristic be maintained throughout the operating life of the tube. This requirement is necessary because the loss material is very carefully applied during the manufacture to minimize interference with propagating space-charge waves while effectively absorbing reflected electromagnetic waves on the helix.

One solution to this problem is proposed by R. P. Anand in U.S. Pat. No. 3,474,284 issued on Oct. 21, 1969 and assigned to the assignee hereof. It is suggested by Anand that the high frequency TWT attenuator comprise a coating containing the element tantalum, e.g., either substantially pure tantalum or the compound tantalum nitride. Substantially pure tantalum has been used commercially to the exclusion of tantalum nitride primarily for reasons relating to ease of manufacture; that is, the resistivity of tantalum-nitrogen films is a strong function of the nitrogen content which means more stringent controls on processing are required. However, the substantially pure tantalum attenuators have indeed reduced the effects of prolonged particle bombardment. Unfortunately, one problem not contemplated with respect to a tantalum attenuator film is that it undergoes at about 700° C a phase transition in which its crystalline structure changes from beta-tantalum to body-centered-cubic (bcc) tantalum accompanied by a sharp decrease in resistivity by a factor of four. Of course, such a drastic decrease in resistivity severely hampers the ability of the tantalum film to perform properly its designated function of attenuating reflected energy in the TWT.

The tantalum thin film may reach 700° C during fabrication or during operation of the TWT. First, in the fabrication of the TWT, after the loss pattern has been applied to the helix and support rods, the helix assembly is typically subjected to a vacuum heat treatment at, for example, 800° C for 1 hour at 5×10^{-6} torr. The purpose of this step is to stabilize the loss pattern and to outgas the helix. Tests have shown that the resistance of beta-tantalum decreases by a factor of four under such conditions. Second, in relatively high power TWTs the normal operating power may be 41 dbm or higher which may be sufficient, especially in thinner portions of the attenuator coating, to raise its temperature above 700° C.

SUMMARY OF THE INVENTION

In an illustrative embodiment of our invention, a traveling wave tube comprises an electron gun for projecting a beam of electrons toward a collector. An elongated slowwave structure, such as a wire helix, which extends between the electron gun and the collector, surrounds the beam path and is coupled at its input end to a signal source and at its output end to a load. The tube is provided with a focusing structure for constraining the flow of electrons to a path entirely within the slow-wave structure.

Feedback energy is attenuated by a coating of lossy material on a portion of the helix. It is well known that the helix loss material should have a low vaporization pressure, high melting point, and high resistivity and should, according to the Anand patent previously mentioned, be capable of extended operation without substantial change of its loss characteristic due to electron and ion bombardment.

Our invention is characterized in that a portion of the slow-wave structure is coated with a film comprising an alloy of tantalum and aluminum for attenuating feedback energy. This alloy possesses a sufficiently high melting point, low vaporization pressure, and high resistivity to meet the above requirements. In addition, a thin film of a tantalum aluminum alloy on the helix and support rods provides the desired loss characteristics without deteriorating substantially as a result of electron and ion bombardment.

More importantly, however, we have found that an attenuator coating of tantalum-aluminum alloy desirably exhibits no phase transition, and hence no abrupt decrease in its resistivity, in the temperature range from 500° to 900° C. This range covers essentially all film temperatures which would be expected under normal operating conditions of even relatively high power TWTs, and in addition covers the common range of temperatures used in the aforementioned vacuum heat treatment. We have found, moreover, that a near optimum alloy composition includes 40±10 atomic percent aluminum which limits the resistivity changes of the film to ±10 percent over the range 500° C to 900° C. This resistivity range represents a permissible deviation from stability in a commercial TWT.

We have found, in addition, that the tantalum-aluminum alloy attenuator coating is preferably deposited on the helix and support rods by sputtering from a planar cathode which comprises a "Swiss cheese-like" structure; i.e., an aluminum plate affixed to a water cooled mount and a perforated tantalum plate affixed to the aluminum plate. By sputtering at about 4 kV and 150 ma with this type of cathode, we have been able to fabricate reproducibly relatively pure tantalum-aluminum films (less than about 3 atomic percent interstitial impurites and about 2 atomic percent argon) with aluminum compositions of about 40 atomic percent — the near optimum design.

BRIEF DESCRIPTION OF THE DRAWING

Our invention, together with its various features and advantages, can be easily understood from the following more detailed description in conjunction with the accompanying drawing, in which:

FIG. **1** is a partial sectional view of a traveling wave tube employing the principles of our invention;

FIG. **2** is an enlarged section taken along line **2—2** of FIG. **1**; and

FIG. **3** is an enlarged view of part of the helix and helix support structure of the traveling wave tube of FIG. **1**.

DETAILED DESCRIPTION

Before discussing in detail our invention, it will be helpful to review briefly the operation of a TWT and the role which a high frequency attenuator plays in its operation.

Referring now to FIG. **1**, there is shown a traveling wave tube package **10**, the purpose of which is to amplify electromagnetic waves which are transmitted to the tube by an input waveguide **11** as shown by the arrow. Located near the opposite end of the device is an output waveguide **12** for extracting amplified electromagnetic waves from the traveling wave tube and transmitting them to an appropriate load as indicated by the other arrow. Extending between the input and output waveguides is a conductive wire helix **13** which surrounds the central axis of the device. An electron beam is formed and projected along the central axis by an electron gun **14** of a well-known type which includes a cathode **15**, a beam-forming electrode **16** and an accelerating anode **17**. The electron beam is collected by a collector electrode **18** located at the end of the helix **13** opposite the electron gun **14**.

The electron beam is projected in close proximity to the conductive helix with interaction taking place between the electron beam and the field of an electromagnetic wave propagating on the helix. With the helix many wavelengths long at the operating frequency, the cumulative interaction between the electron beam and the field of the wave results in a transfer of energy from the beam to the field of the wave, thereby amplifying the wave.

The helix **13** is mounted by three support rods **19** which are shown in more detail in FIGS. **2** and **3**. A periodic magnetic structure **20** surrounding both the rods **19** and the helix **13** focuses the beam and constrains it to flow along the central axis to the collector **18**. Other known focusing structures can be used, if so desired.

As mentioned previously, the major cause of instability in a traveling wave tube is the tendency of wave energy to be reflected from the output end of the helix **13** back toward the input end and thereby to cause oscillations within the device. The reflected waves are usually suppressed by an attenuation coating or layer **21** along part of the helix **13**. It has been common practice to include on part of the helix a lossy material, typically a thin coating of graphite or tantalum, which absorbs and dissipates the reflected wave energy. Such helix loss materials should have a low vaporization pressure, a high melting point, and should preferably be a material having comparatively high resistivity. The resistivities of graphite and tantalum at 20° C., for instance, are 800 micro-ohm cm and 15 micro-ohm cm, respectively. Illustratively the coating is about 0.08 inches long and 500 Angstroms thick depending on its resistivity and the desired resistance.

The manner in which the layer **21** attenuates the reflected energy is best understood by considering a single turn of the helix **13** in the loss region defined by the layer **21**. As reflected electromagnetic wave energy travels from the output end of the helix **13** toward the input end, it encounters the turn of the helix and therein produces an electric field. The ends of the turn are electrically connected through the layer **21** on the support rods **19**. The electric field produced by the reflected waves in the turn of the helix are effectively shunted through the layer **21** and thereby attenuated. Thus the layer **21** acts as a load to the electric fields in the helix in much the same way that a resistor acts as a load when connected across a battery. Also of importance is the attenuation of surface currents produced in the helix by the reflected energy. Since these currents travel on the helix surface, they are attenuated by the layer **21** on the surface of the helix itself.

It is important that the loss material be very carefully applied so that it effectively acts as a reflectionless absorber of waves traveling toward the input end, while minimally affecting the growing wave traveling toward the output end. To this end, the density of the loss material should be tapered in the direction of the output end so that reflected-backward traveling waves are gradually absorbed. On the other hand, the total length of the loss section should be minimized to give the smallest possible interference with the growing wave.

In accordance with one embodiment of our invention a traveling wave tube is characterized in that the attenuating coating or layer **21** comprises a tantalum-aluminum alloy. As shown in FIG. **3**, this layer is deposited along a discrete region of the helix **13** and the support rods **19**. In order to maintain adequate stability for commercial operation of a TWT, it is desirable that the resistivity of the attenuation coating not vary by more than about ± 10 percent. We have found that tantalum-aluminum alloy coatings having 40± 10 atomic percent aluminum satisfy this requirement over the temperature range from approximately 500° to 900° C.

We have also demonstrated that the aluminum content of such coatings can be systematically and reproducibly varied from about 30 atomic percent aluminum to about 50 atomic percent aluminum by means of a unique sputtering arrangement. This arrangement included a planar "Swiss cheese-like" cathode made up of tantalum and aluminum plates illustratively measuring 17.5 inches wide by 2 inches high. The aluminum plate was affixed to a water cooled copper electrode by aluminum screws and the tantalum plate (about 0.02 inches thick) was attached to the aluminum plate using tantalum screws. Importantly, the tantalum plate was

perforated; i.e., in one embodiment it contained 140 holes each 21/64 inches in diameter and spaced ½ inch apart in order to expose about 34 percent of the area of the aluminum plate. The cathode was located in a suitable vacuum chamber and a plurality of helices (including support rods **19**), suitably masked to define the loss regions, were rotatably mounted in the chamber facing the perforated tantalum plate. A movable shutter shielded the cathode from the helices.

After evacuating the chamber to a pressure of less than about 5×10^{-6} torr, argon was introduced at a flow of approximately 4.0 sccm. With the chamber pressure of about $15 - 25 \times 10^{-3}$ torr, presputtering was conducted for approximately 25 minutes before opening the shutter to allow deposition of the attenuator coating. During deposition the helices were each rotated about their (cylindrical) axes at a rate of about 60 rpm.

We have found that relatively pure films (less than 3 atomic percent interstitial impurities and approximately 2 atomic percent argon) with aluminum contents nearly optimum (about 40 atomic percent) can be reproducibly fabricated by sputtering at 4 kV and 150 ma. In addition, we were able to systematically vary the aluminum content between about 45 and 30 atomic percent as the voltage increased from 3.0 to 5.0 kV (all at 150 ma). The corresponding range of resistivity values was between approximately 375 and 297 micro-ohm centimeters as measured on ceramic monitor substrates located in the sputtering chamber.

Subsequent to deposition, the helices were, as mentioned before, subjected to a vacuum heat treatment, typically for 1 hour at 800° C and 5×10^{-6} torr in order to stabilize the loss patterns and outgas the helices. Optimum stability, less than ± 10 percent resistivity change, was obtained for films containing about 40± 10 atomic percent aluminum which were deposited by sputtering at 4 kV and 150 ma. The deposition rate under these conditions was approximately 55 Angstroms per minute and the film resistivities were approximately 320 micro-ohm cm as measured on ceramic monitor substrates. In a total of about 25 additional runs at 4 kV and 150 ma the variation in aluminum content was only about ± 3 atomic percent.

Tubes with helices sputtered as aforesaid with tantalum-aluminum alloy attenuator coatings have been successfully life tested. For example, traveling wave tubes operated under normal conditions, with about 5 watts of power being dissipated in the attenuator, have exhibited no failures for more than 5,000 hours.

It is to be understood that the above-described arrangements are merely illustrative of the many possible specific embodiments which can be devised to represent application of the principles of our invention. Numerous and varied other arrangements can be devised in accordance with these principles by those skilled in the art without departing from the spirit and scope of the invention. In particular, tantalum-aluminum is also useful as a loss material on other slow-wave structures and in fact in any device, such as a magnetron or cross-field amplifier, in which the loss material is subject to sustained particle bombardment and in which stable resistivity is desired.

What is claimed is:

1. A transmission system for propagating energy in a first direction comprising:

a source of electrons and means for projecting said electrons for interaction with said propagating energy;

said system tending disadvantageously to reflect energy in a second direction opposite to the first direction; and

means for absorbing the reflected energy thereby preventing the establishment of oscillations in said transmission system;

characterized in that said absorbing means comprises an alloy of tantalum and aluminum containing approximately 30 to 50 atomic percent aluminum.

2. The system of claim **1** wherein said alloy contains approximately 40 atomic percent aluminum.

3. The system of claim **1** wherein said transmission system includes a slow-wave structure of a traveling wave tube, said absorbing means being formed on said slow-wave structure.

4. An electron discharge device comprising:

a source of electrons;

an electron collector;

means for projecting electrons in the form of a beam from said source to said collector;

means for focusing the beam of electrons;

a slow-wave structure surrounding the beam path and support means therefor;

said slow-wave structure having input and output ends;

means for coupling electromagnetic wave energy to the input end of said slow-wave structure;

means for extracting electromagnetic wave energy from the output end of said slow-wave structure;

said output end tending disadvantageously to reflect wave energy; and

means for attenuating the reflected wave energy along a discrete portion of said slow-wave structure;

characterized in that said attenuating means comprises a thin film alloy of tantalum and aluminum containing about 30 to 50 atomic percent aluminum.

5. The device of claim **4** wherein said alloy contains about 40 atomic percent aluminum.

6. The electron discharge device of claim **4** wherein:

said slow-wave structure comprises a wire helix;

said support means comprises a plurality of rods each substantially coextensive with said helix and abutting against said helix; and

said thin film is deposited onto a portion of said helix and said support rods.

* * * * *