US00D995201S

(12) **United States Design Patent**
Hagan

(10) **Patent No.: US D995,201 S**
(45) **Date of Patent: ** Aug. 15, 2023**

(54) **HYDRO BOTTLE CAP**

(71) Applicant: **SNUGZ/USA, LLC**, West Jordan, UT (US)

(72) Inventor: **Jim Hagan**, City of Industry, CA (US)

(73) Assignee: **SNUGZ/USA, LLC**, West Jordan, UT (US)

(**) Term: **15 Years**

(21) Appl. No.: **29/765,176**

(22) Filed: **Jan. 6, 2021**

(51) **LOC (14) Cl.** **07-01**

(52) **U.S. Cl.**
USPC **D7/392.1**; D9/449

(58) **Field of Classification Search**
USPC D7/507, 509, 510, 511, 533, 535, 536, D7/392.1, 396.1, 396.2, 608, 300.1, 532, D7/900; D9/443, 446, 449; D3/202
CPC A47G 19/22; A47G 19/2288; A47G 19/2205; A47G 19/2266; A47G 19/2272; A47J 41/0077; A47J 41/0088; B65D 77/283
See application file for complete search history.

(56) **References Cited**

U.S. PATENT DOCUMENTS

D786,072 S * 5/2017 Breit D9/443
D801,111 S * 10/2017 Eyal D9/449
D817,085 S * 5/2018 Davis D7/392.1
D830,783 S * 10/2018 Diener D7/532
D843,778 S * 3/2019 Yao D7/392.1
D867,811 S * 11/2019 Lane D7/392.1
D870,509 S * 12/2019 Bo D7/392.1
D896,572 S * 9/2020 Nichols D9/449
D913,036 S * 3/2021 Steenari D7/392.1
D920,041 S * 5/2021 Chen D7/396.2
D935,266 S * 11/2021 Chen D7/392.1
D935,836 S * 11/2021 Wang D9/449
D944,052 S * 2/2022 Yao D7/392.1
D945,210 S * 3/2022 Ni D7/392.1
D968,885 S * 11/2022 Kutlug D7/392.1
D977,299 S * 2/2023 Chen D7/392.1
D980,016 S * 3/2023 Xu D7/510

FOREIGN PATENT DOCUMENTS

CN 305016375 * 1/2019
CN 306124636 * 10/2020
(Continued)

OTHER PUBLICATIONS

Cheetah [online] URL: https://www.amazon.com/Cheetah-Bottles-Replacement-Accessories-Wide-Mouth/dp/B07SHD3VMD (site visited: Feb. 6, 2023) (Year: 2019).*
(Continued)

Primary Examiner — Jae Liang
Assistant Examiner — Tia Ruth-Renee Polidori
(74) *Attorney, Agent, or Firm* — Workman Nydegger

(57) **CLAIM**

The ornamental design for a hydro bottle cap, as shown and described.

DESCRIPTION

FIG. **1** is a front perspective view of a hydro bottle cap.
FIG. **2** is a front view of the bottle.
FIG. **3** is a rear view of the bottle.
FIG. **4** is a right side view of the bottle.
FIG. **5** is a left side view of the bottle.
FIG. **6** is a top view of the bottle.
FIG. **7** is a bottom view of the bottle; and,
FIG. **8** is another top perspective view thereof, shown in a configuration of use with an environmental bottle.
The broken line showing of the bottle in FIG. **8** depicts environmental subject matter that forms no part of the claimed design. The portions of the hydro bottle cap shown in broken line form no part of the claimed design.

1 Claim, 6 Drawing Sheets

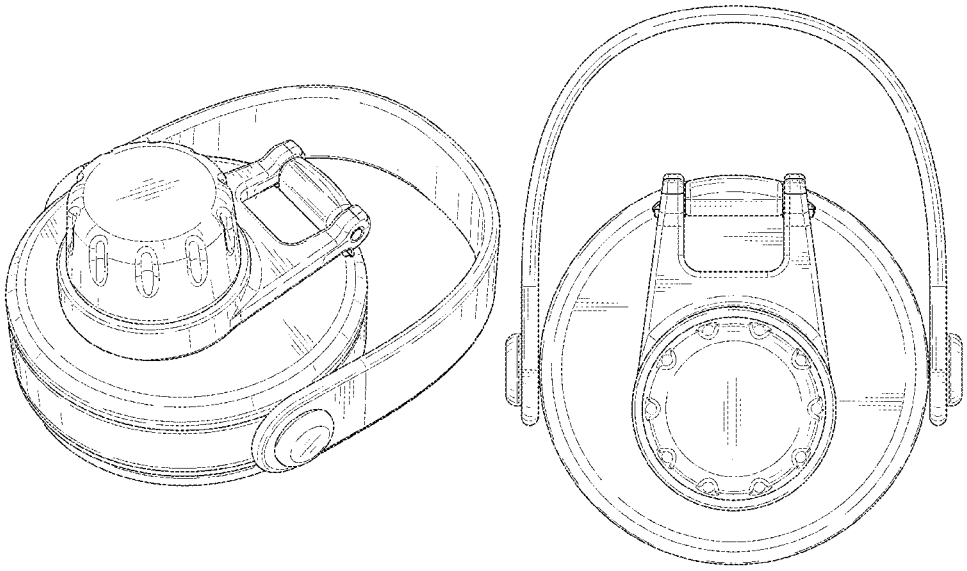

(56) **References Cited**

FOREIGN PATENT DOCUMENTS

CN	307218175	*	4/2022
CN	307722533	*	12/2022
CN	307844529	*	2/2023
CN	307844563	*	2/2023
CN	307866901	*	2/2023
CN	307893924	*	3/2023
CN	307917247	*	3/2023
CN	307931669	*	3/2023
KR	301003061.0000	*	4/2019

OTHER PUBLICATIONS

Wapest [online] URL: https://www.amazon.com/WAPEST-Bottle-Replacement-Reusable-Accessories/dp/B08PCGQS51 (site visited: Feb. 6, 2023) (Year: 2020).*

Wish Direct [online] URL: https://www.amazon.com/Wish-Flexible-Handle-Simple-Modern/dp/B083SGDN17 (site visited: Feb. 6, 2023) (Year: 2020).*

Lululemon [online] URL: https://shop.lululemon.com/p/water-bottles/Back-to-Life-Sport-Bottle-32oz/_/prod 10190145?color=59587 &sz=ONESIZE (site visited: Feb. 6, 2023) (Year: 2021).*

ThermoFlask [online] URL: https://mythermoflask.com/products/thermoflask-chug-lid (site visited: Feb. 6, 2023) (Year: 2021).*

ImprintItems [online] URL: https://www.imprintitems.com/product/basecamp-mega-sp-tundra-bottle-40-oz (site visited: Feb. 6, 2023) (Year: 2023).*

Manna [online] URL: https://mannahydration.com/products/titan-lid-v1 (site visited: Feb. 6, 2023) (Year: 2023).*

NYFifth [online] URL: https:/lwww.nyfifth.com/sample_design.php?products_id=55914 (site visited: Feb. 6, 2023) (Year: 2023).*

SnugZUSA [online] URL: https://snugzusa.com/product/bc5005 (site visited: Mar. 30, 2023) (Year: 2023).*

Takeya [online] URL: https://www.amazon.com/dp/B01GJOV4G4 (site visited: Mar. 30, 2023) (Year: 2016).*

* cited by examiner

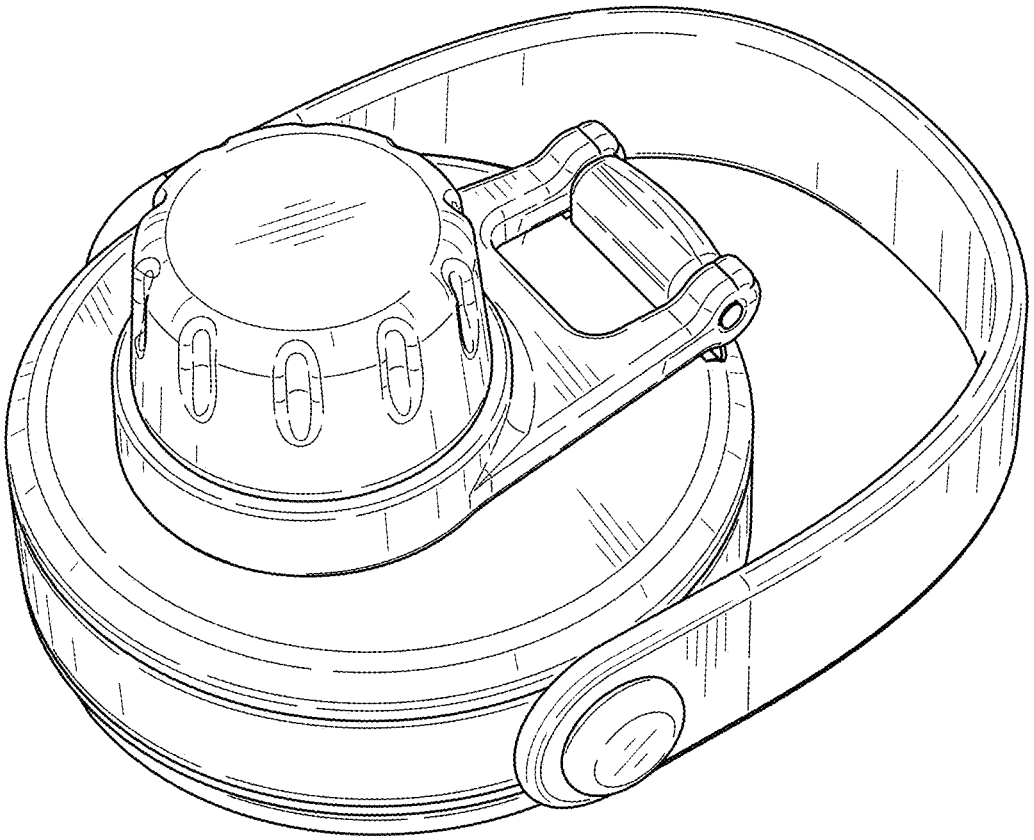

FIG. 1

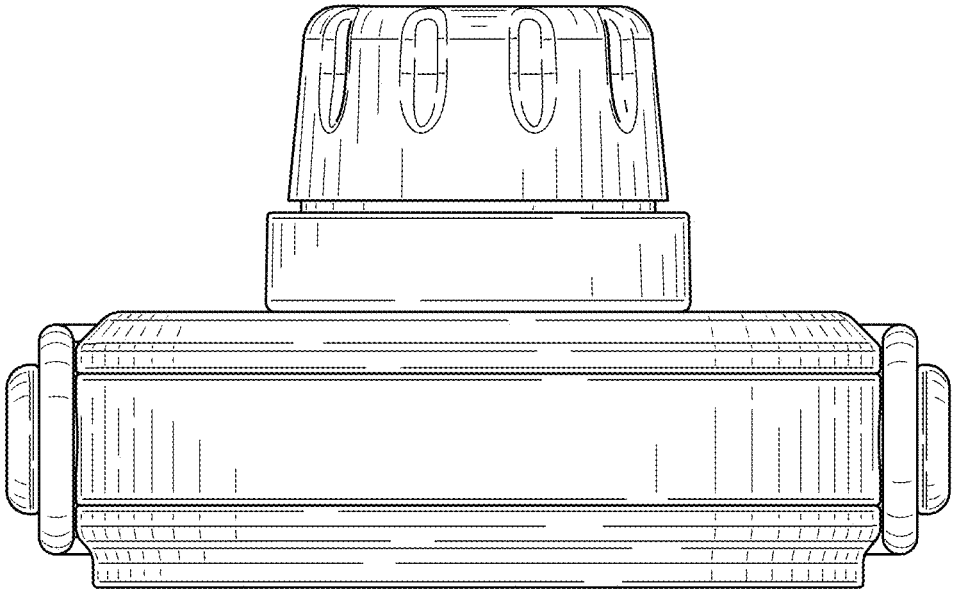

FIG. 2

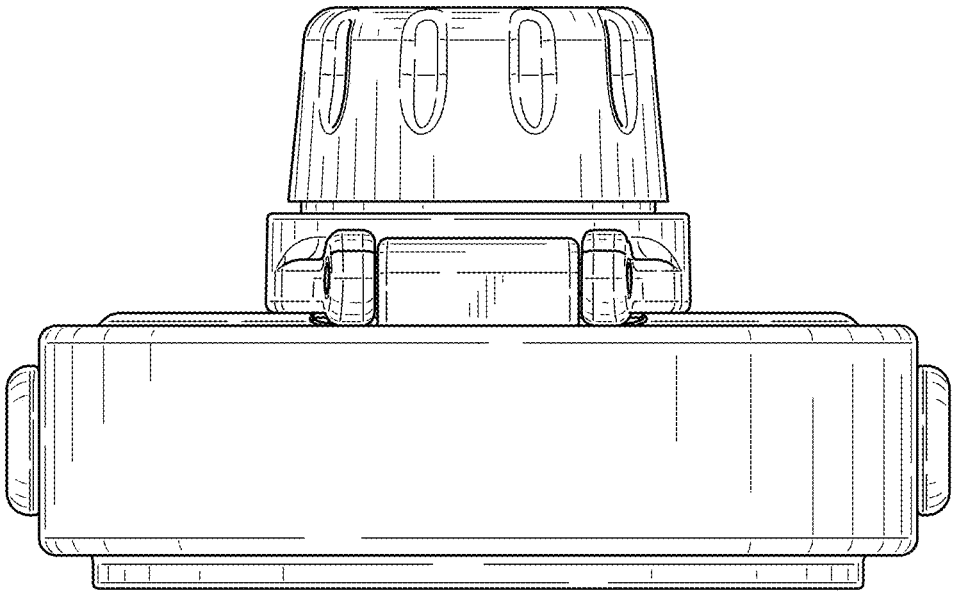

FIG. 3

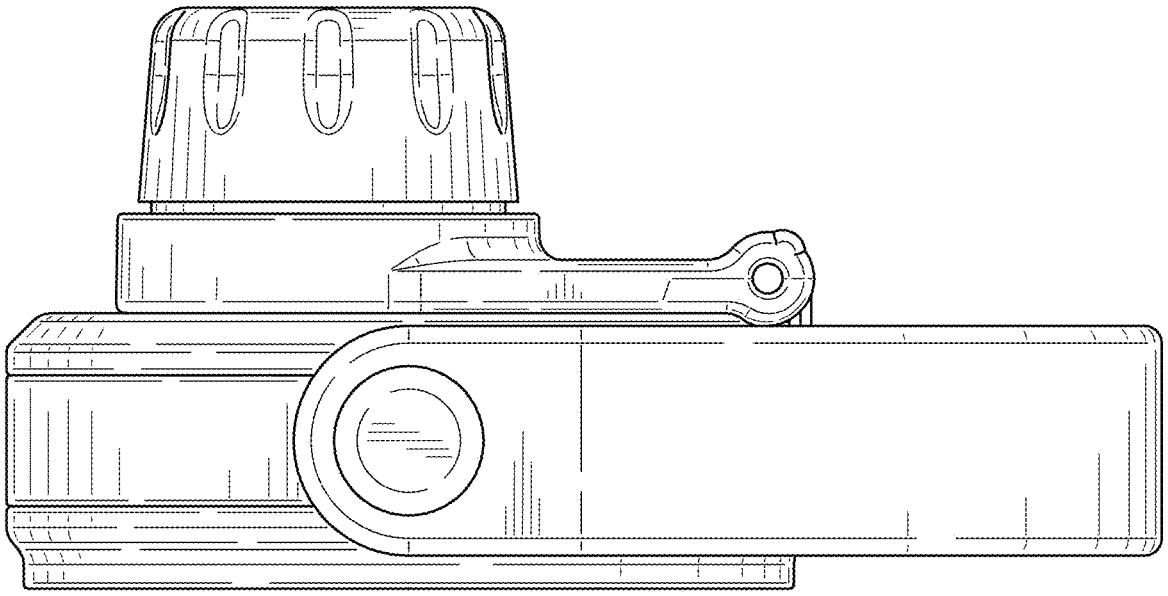

FIG. 4

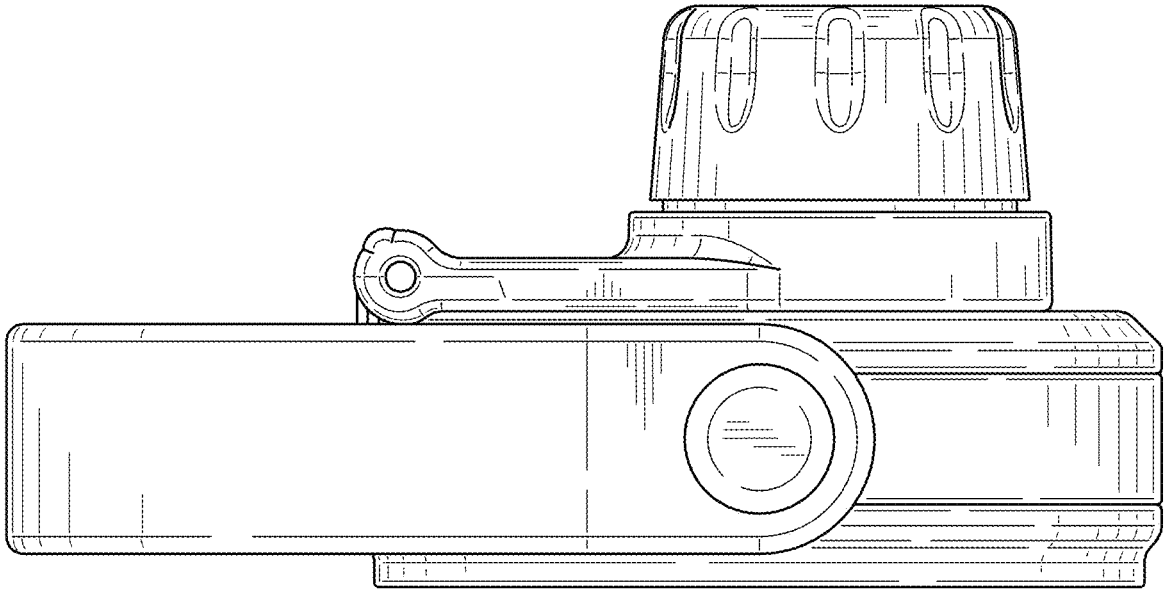

FIG. 5

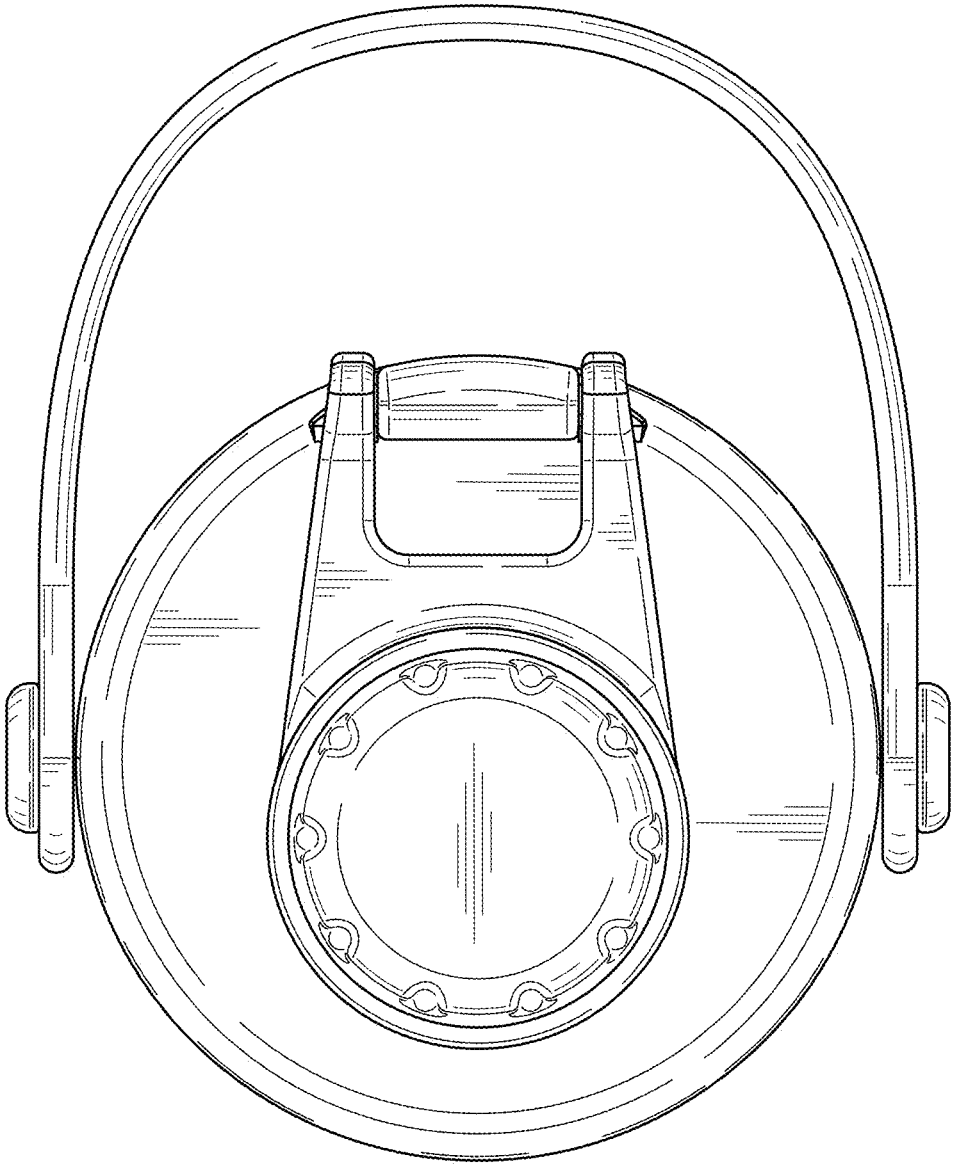

FIG. 6

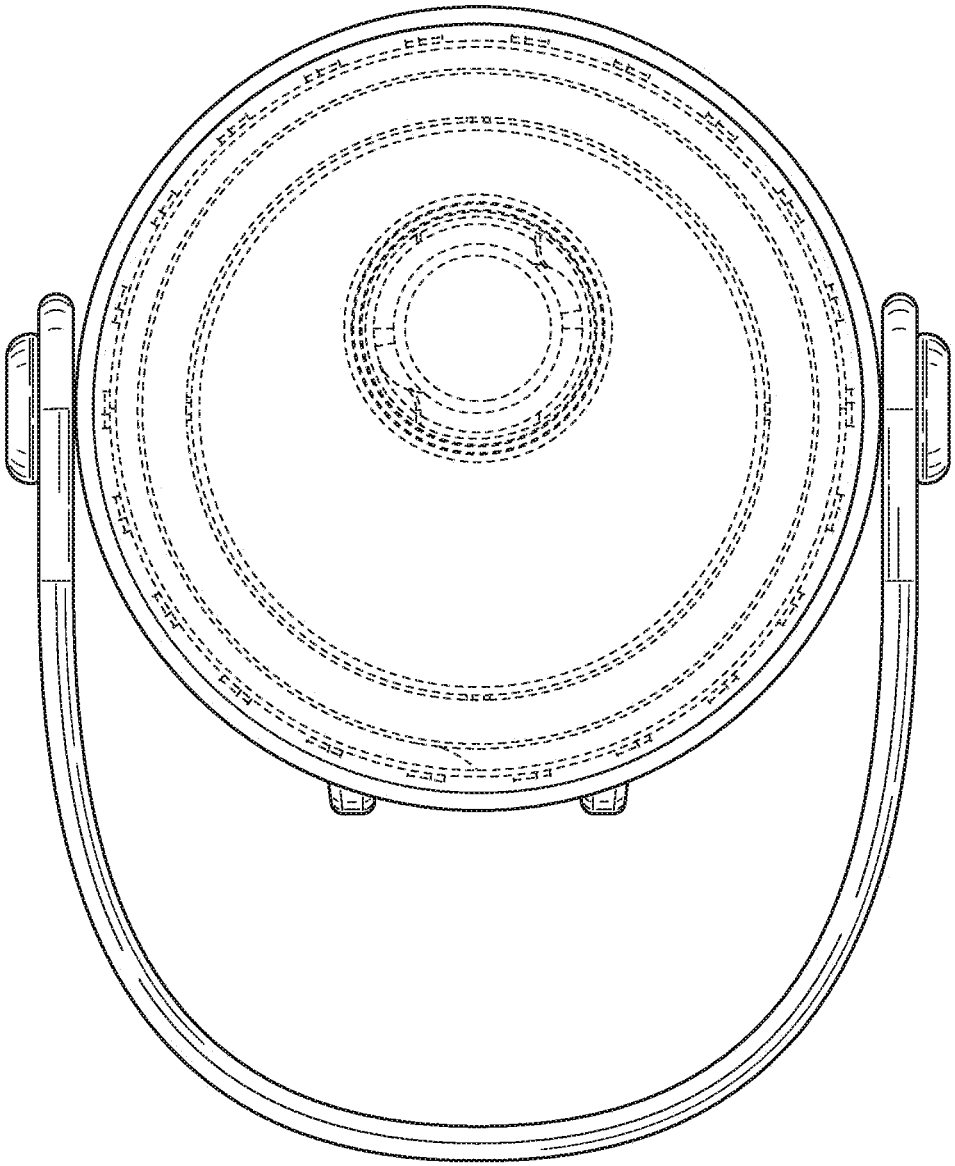

FIG. 7

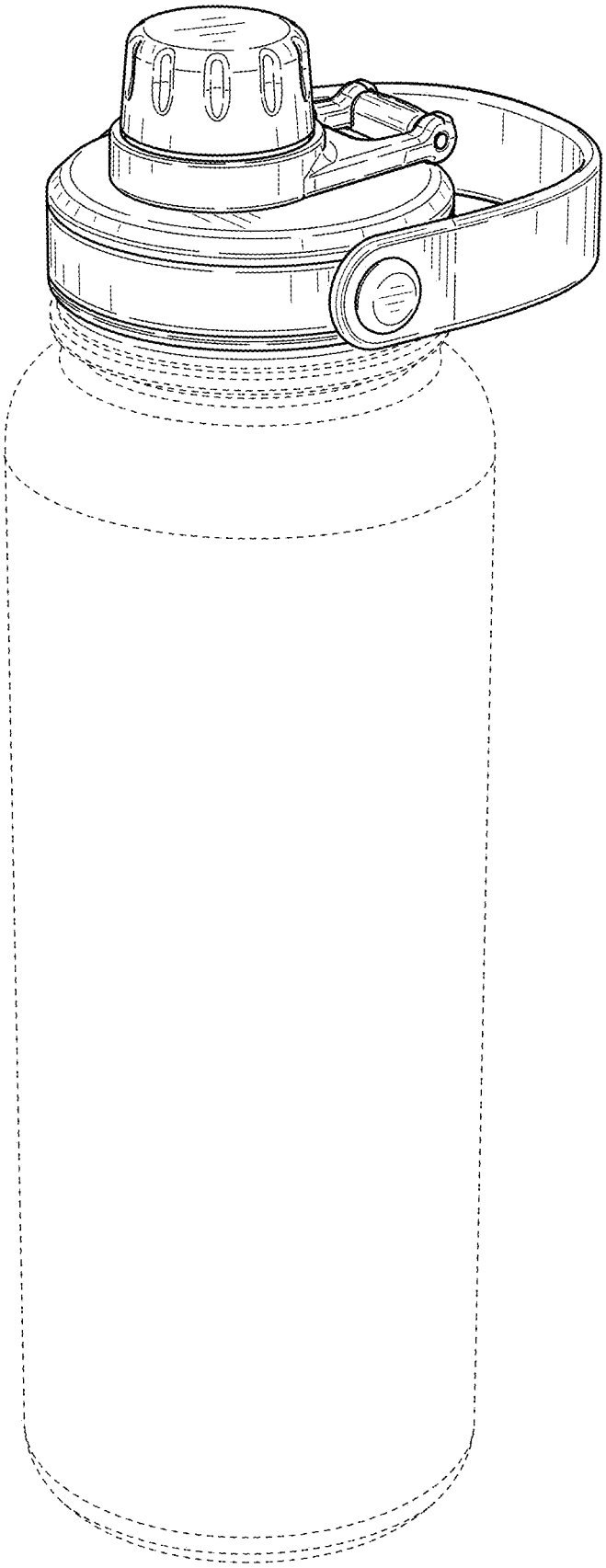

FIG. 8