Aug. 2, 1966 O. A. WANDEL 3,263,888

HANDLE HOLD DOWN LATCH FOR COMPRESSION TACKER

Filed Oct. 1, 1964

Fig. 1

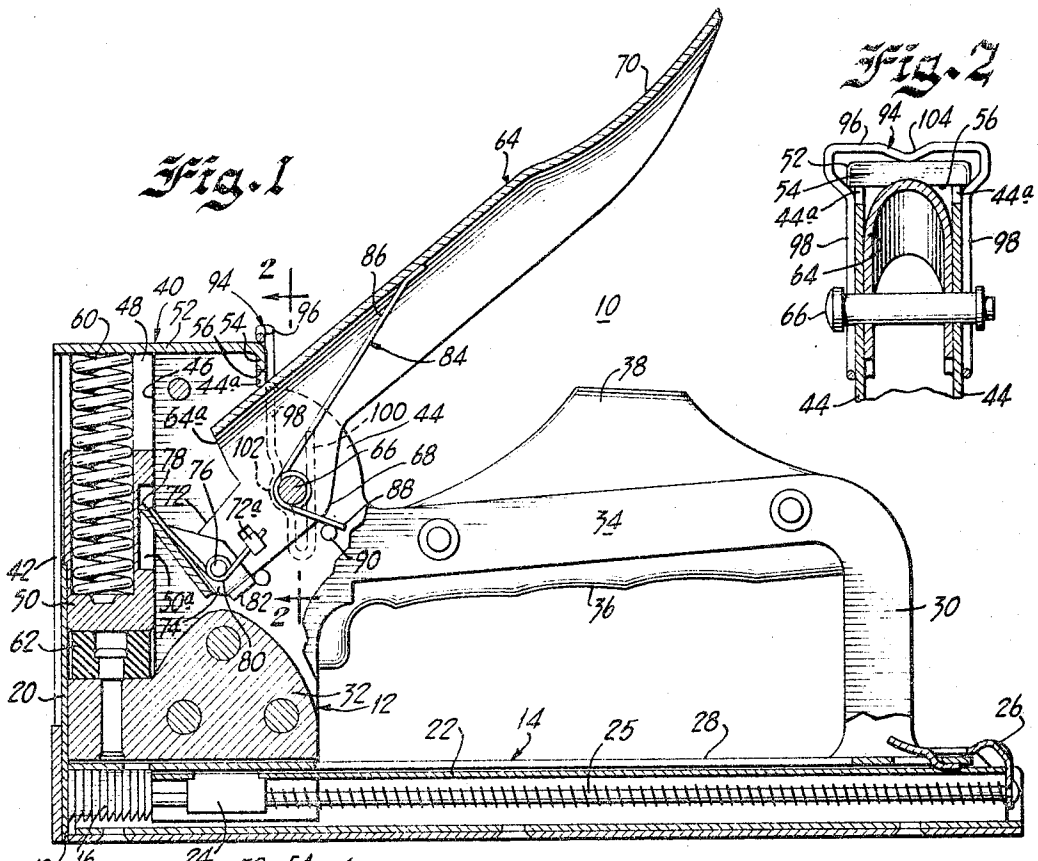

Fig. 2

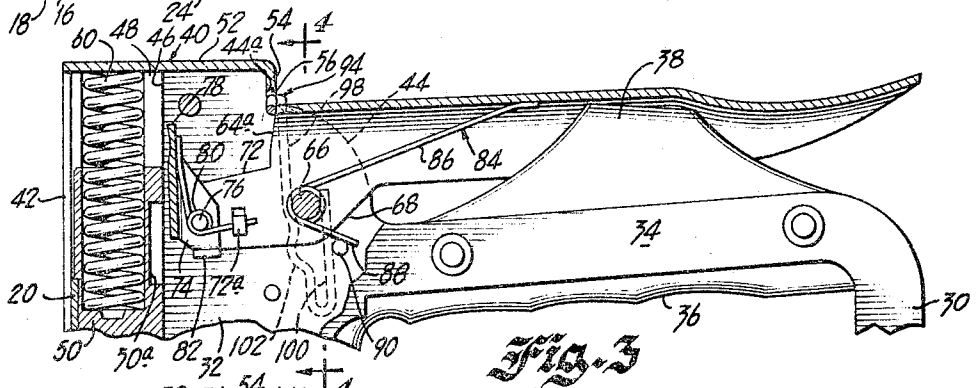

Fig. 3

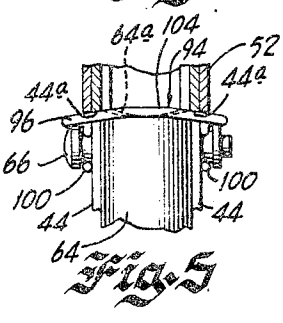

Fig. 4

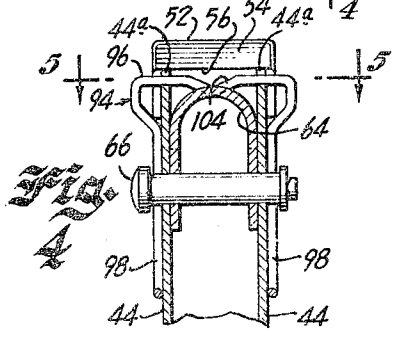

Fig. 5

INVENTOR
OSCAR A. WANDEL

Mason, Kolehmainen, Rathburn and Wyss
ATTORNEYS.

United States Patent Office 3,263,888 Patented August 2, 1966

3,263,888

HANDLE HOLD DOWN LATCH FOR COMPRESSION TACKER

Oscar A. Wandel, Mundelein, Ill., assignor to Fastener Corporation, Franklin Park, Ill., a corporation of Illinois

Filed Oct. 1, 1964, Ser. No. 400,791
6 Claims. (Cl. 227—132)

The present invention relates to fastener driving tools and more particularly to hand operated tools commonly known as tackers or staplers for driving staples and the like.

Hand operated tackers and staplers are generally provided with actuating handles which are normally biased by resilient means to an actuating position upwardly away from the frame of the stapler wherein an operator may depress the handle toward the frame in order to actuate the stapler to drive a staple. In order to reduce the overall size of the stapler for storing, boxing and shipping and to prevent inadvertent actuation thereof, the present invention provides new and improved means for locking or latching the handle in a depressed or downward inoperative position wherein the handle lies closely adjacent to the frame of the stapler and cannot be actuated.

Accordingly, it is a principal object of the present invention to provide a new and improved stapling device of the hand operated or actuated type.

It is another object of the present invention to provide a new and improved latching or locking means for a stapling device of the type described.

Another object of the present invention is the provision of a new and improved hand operated stapling device of the type described including new and improved means for latching or locking the handle thereof in a depressed or inoperative position against the urging of resilient means which tends to normally move the handle outwardly away from the frame to an operative or actuating position in preparation for actuation by the operator when it is desired to drive a staple.

More specifically, it is an object of the present invention to provide new and improved latching means for latching the handle of a stapling device of the type described in an inoperative or depressed position wherein the latching means is selectively reciprocally movable between a latched position engaged between the handle and frame rendering the handle inoperative and an unlatched position out of the moving path of the handle to permit free movement thereof during actuation.

Yet another object of the present invention is the provision of a new and improved latching means of the type described above which includes a U-shaped member having a central bight portion for engaging the handle of the stapler to latch the handle in an inoperative or depressed position and a pair of dependent legs engaging a pivot pin which pivotally carries the handle of the stapler.

Still another object of the present invention is the provision of a new and improved latching means of the type described which includes means for positively retaining the latch in its unlatched position free from engagement with the handle of the tacker.

Yet another object of the present invention is the provision of a new and improved latching means of the type described which is simple in construction, low in cost and easy to manipulate into the desired selected position.

The foregoing and other objects and advantages of the present invention may be carried out in one form by the provision of a new and improved hand operated tacker or stapler including a frame and an actuating handle mounted for pivotal angular movement about a pivot pin carried by the frame. Resilient means are provided normally urging the handle in a given angular direction away from an inoperative or depressed position juxtaposed the frame to an outward or actuating position ready for depression by an operator of the tacker to drive a staple. New and improved latching means are provided for selectively engaging the handle when in a latched position and for maintaining the handle in a depressed or inoperative position against the urging of the resilient means which normally tends to move the handle outwardly to an outward or opreative position wherein it can be depressed by an operator to drive a staple, the latching means being selectively, reciprocally movable as desired between the latched position and an unlatched position wherein the handle is freely movable by the resilient means to the outward operative position or by the operator on depression thereof to drive a staple.

For a better understanding of the invention reference will be had to the following detailed description when taken in conjunction with the drawings, in which:

FIG. 1 is a sectional elevational view of a hand operated stapler or tacker constructed in accordance with the present invention and illustrating the handle in its operating or actuating position away from the frame and ready for actuation or depression by an operator to drive a staple.

FIG. 2 is an enlarged detailed sectional view taken substantially along line 2—2 of FIG. 1 illustrating in detail the new and improved latching means of the present invention as it is positioned in its unlatched position.

FIG. 3 is a partial sectional elevational view similar to FIG. 1 illustrating the latching means in a position latching the handle in a depressed or inoperative position.

FIG. 4 is an enlarged fragmentary sectional view taken along line 4—4 of FIG. 3.

FIG. 5 is an enlarged fragmentary sectional view taken substantially along line 5—5 of FIG. 4.

Referring now more specifically to the drawings, there is illustrated a fastener driving tool or hand operated stapler or tacker referred to generally by the reference numeral **10**. The stapler **10** includes a main structure or frame **12**, a magazine assembly **14** for holding a supply of staples **16** and feeding them into a drive track **18** disposed at the forward end of the stapler from which the staples are driven by a reciprocal driving element or blade **20**.

The magazine assembly **14** includes a staple guide rail **22**, a staple pusher **24**, slidably mounted thereon, a pusher feed spring mechanism **25** with a latch mechanism **26** at the rearward end thereof, which can be unlatched to allow the pusher to be withdrawn so that a new supply of staples **16** may be positioned on the guide rail **22**, and a cover or housing **28** for enclosing the assembly. The magazine assembly **14** is secured adjacent its rearward and forward ends, respectively, to a fixed depending rear handle portion **30** and a main forward portion **32** of the frame **12**.

The forward portion **32** and the rear portion **30** of the frame **12** are joined by an integrally formed fixed hand grip portion **34** having a grip **36** on the underside thereof. A resilient cushion **38** is mounted on the upper side of the grip portion **34**. The forward portion of the frame **12** is provided, as shown, with a housing **40** having a forward wall **42** defining a forward wall of the drive track **18** and a pair of side walls **44** formed to provide opposed grooves **46** which provide a guide way **48** for accommodating the sliding movements of a plunger **50** which carries the driving blade **20**. The housing **40** also includes a top wall or cap **52** having a downwardly depending lip **54** at the rearward end thereof which defines the upper edge of a rearwardly facing opening **56**

in the housing. The side walls **44** are provided with rearwardly facing notches **44***a* positioned just below the lower edge of the depending lip **54** of the top wall or cap **52**.

A compression type actuating spring **60** is disposed between the top wall **52** of the housing and the plunger **50** so as normally to urge the plunger downward on a staple driving stroke. A resilient cushion **62** is provided at the lower end of the forward portion **32** of the housing for engagement by the lower end of the plunger as it moves rapidly downward at the end of a driving stroke, resiliently to cushion the shock of the driving stroke.

In order to initiate a staple driving stroke of the plunger **50** and the attached driving blade **20**, the stapler is provided with an actuating handle **64** which is mounted for angular movement with respect to the frame **12** about a pivot pin **66** which is journaled in the side walls **44** of the frame. The handle **64** is of substantially inverted U-shaped cross-section as shown in FIGS. 2 and 4 and includes parallel side portions **68** adjacent the forward portion thereof through which the pivot pin **66** extends. The handle **64** is disposed relative to the frame **12** to extend through the opening **56** in the housing **40** and rearwardly therefrom and the top portion of the rearward end of the handle is provided with an identation **70** for aiding an operator in gripping and depressing the handle.

The side portions **68** of the handle **64** are provided with forwardly extending legs **72** (see FIG. 1) on which is pivotally mounted a trigger mechanism **74** journaled about a pin **76** extending between the legs **72**. The trigger **74** is provided with a forward wall **78**, the upward end of which is adapted to engage a lifting slot **50***a* defined in the rear surface of the plunger **50** so that the plunger will be lifted upwardly against the compression of the spring **60** when the handle is depressed downwardly from its upper or actuating position of FIG. 1 toward the depressed position of FIG. 3. The upper portion of the forward wall **78** of the trigger **74** is biased forwardly to insure engagement within the slot **50***a* of the plunger by means of a coil spring **80** journaled about the pin **76** and provided with a pair of legs, one of which is secured to a lug **72***a* extending from one of the legs **72** of the handle **64**. The other end of the spring **80** bears against the forward wall **78** of the trigger mechanism. A bottom stop plate **82** is provided on the trigger **74** to engage the lower edges of the forward legs **72** of the handle **64** to limit the forward movement of the upper portion of the forward face **78** relative to the handle **64** so that as the trigger moves upwardly in engagement with the slot **50***a* of the plunger **50** on a downward actuating stroke of the handle, it will slip out of engagement with upper edge of the slot **50***a* near the end of its upper movement to free the plunger for rapid downward movement under the influence of the compression spring **60** to drive a staple **16** positioned in the drive track **18** by the magazine assembly **14**.

As the handle **64** reaches the end of an actuating stroke, it will engage the resilient cushion **38** and when the handle is released by the operator it will normally move back to the actuating position of FIG. 1 under the influence of resilient means such as a biasing spring **84** which normally urges the handle to pivot upwardly about the pivot pin **66** in a counter-clockwise direction as illustrated in FIG. 1. The spring **84** is provided with a central coiled portion disposed around the handle pivot pin **66**, an integral upper leg **86** extending therefrom bearing against the underside of the handle **64** and a lower short leg **88**, the outer end of which bears against a fixed pin **90** secured between the side walls **44** of the frame. Thus, the spring **84** continually exerts a biasing force on the handle **64** tending to bias the rearward end thereof upwardly away from the frame **12** in a counter-clockwise direction.

In order to provide means for latching or locking the handle **64** in its downward depressed or inoperative position as shown in FIG. 3 so that the stapler **10** may be stored or boxed in a manner requiring a minimum of space, and to prevent inadvertent actuation of the stapler, there is provided in accordance with the present invention a new and improved latching or locking mechanism indicated generally by the numeral **94**. The locking mechanism **94** is reciprocably movable between a latched or locking position as shown in FIGS. 3, 4, and 5 and an unlatched or open position as shown in FIGS. 1 and 2. Preferably, the latching mechanism is formed of strong resilient wire such as piano wire or the like which is bent to a generally U-shaped configuration as clearly shown in FIG. 2. The latch includes an upper central or bight portion **96** integrally jointed to downward depending legs **98** which extend inwardly (see FIG. 2) below the bight portion **96** and downwardly to engage the pivot pin **66**. The legs **98** are provided with hooked ends and upwardly extending portions **100** which extend upwardly generally parallel to the downwardly depending main portion of the legs **98** on the opposite side of the pin **66** so as to contact the pivot pin **66** on the opposite side thereof from the downwardly extending main portions of the legs **98**. The downwardly depending portions **98** are provided with detents **102** curved to partially encircle the forward surface of the pin **66** for normally maintaining the locking member **94** in the upward or unlatched position of FIGS. 1 and 2. When in this position, the central bight portion **96** rests above the top wall or cap **52** of the forward housing of the frame and is free from engagement with any part of the handle **64**, thereby allowing a free pivotal movement of the handle. The bight portion **96** is provided with a downwardly and forwardly extending indentation **104** at the central portion thereof which, when the latching assembly is unlatched as shown in FIG. 1, bears against the top plate **52** and in combination with the detents **102** in the legs **98** maintains the latch in an unlatched position.

When it is desired to latch the handle **64** in its depressed or inoperative position as shown in FIG. 3, the latching member **94** is manually moved downwardly to the position there shown wherein the bight portion **96** is disposed in the path of movement of a forward edge **64***a* of the handle. When the latching means **94** is in this position, the bight portion **96** engages a forward edge **64***a* of the handle as shown in FIGS. 3, 4 and 5 and prevents the handle from pivoting to its upper position under the urging of the biasing spring **84**. When the handle **64** is depressed and then released after movement of the latching member **94** to its latching position, the forward edge **64***a* of the handle engages the bright portion **96** forcing it forwardly against the rearward facing edges of the notches **44***a* in the side walls **44** of the housing preventing further upward movement of the handle **64**. When in the latched position as shown in FIG. 3, the upper ends of the upwardly extending hook portions **100** of the latching member **94** maintain the lower portion of the latching member in contacting engagement with pin **66** and prevent any rotation of the lower portion of the latch. The bight portion **96** is therefore held in the latched position against the rearwardly facing edges of the notches **44a** in the side members **44** by the forward pressure of the edges **64a** of the handle, and the lower edge of the lip **54** of the top wall or cap **52** plus the upper and lower edges of the notches **44a** prevent any upward movement of the latching member **94** out of the latched position.

When it is desired to operate the stapler **10** after the handle **64** has been latched in the depressed or inoperative position as shown in FIG. 3, the rear end of the handle is depressed against the cushion **38** to relieve the forward pressure exerted by the edge **64a** of the handle against the bight portion **96** of the latch member **94**. The latching member may then be moved upwardly out of the path of movement of the forward edge **64a** of the handle to the unlatched position shown in FIG. 1 in which position the latching member is maintained by the action of the

detents **102** which engage the pin **66** and the indentation **104** of the bight portion **96** which engages on the top wall **52** as previously described. The handle **64** is then free to pivotally move about the pivot pin **66** and the rearward end of the handle when released by the operator will move upwardly under the influence of the biasing spring **84** to the position of FIG. 1 from whence it can be actuated or depressed to initiate the driving stroke of the stapler.

The latching member **94** provides a simple and efficient means for maintaining the handle **64** of the stapler in its downward depressed or inoperative position when the stapler is not in use. The latching member is reciprocably movable between its unlatched and latched positions and is positively secured in both of these selected positions so that it may not inadvertently move from one to the other.

Although the present invention has been described with reference to a single illustrative embodiment thereof, it should be understood that numerous other modifications and embodiments can be devised by those skilled in the art that will fall within the spirit and scope of the principles of this invention.

What is claimed as new and desired to be secured by Letters Patent of the United States is:

1. A fastener driving tool comprising a frame member and a handle element pivotally mounted for angular movement about a pivot pin carried by said frame member, resilient means normally urging said handle element in a given direction of angular rotation about said pivot pin relative to said frame member and a U-shaped latch member mounted on said pin including a bight portion reciprocally movable toward and away from said pin between a latched position wherein said bight portion projects into the path of movement of said handle element for engagement therewith to selectively fix the position thereof against the action of said resilient means and an unlatched position out of the path of movement of said handle element, said latch member including means on said bight portion engageable with said frame member for positively holding said latch member in said unlatched position.

2. A fastener driving tool comprising a frame and an actuating handle pivotally mounted for angular movement about a pivot pin carried by said frame, resilient means operatively engaging said handle and frame normally urging a rearward portion of said handle pivotally upward away from said frame to an upper position in preparation for a downward actuating movement thereof by an operator of the tool and latch means selectively movable between a latched position wherein said handle is maintained in a downward position with the rearward portion thereof adjacent said frame and an unlatched position permitting said resilient means to urge the rear portion of said handle to said upper position, said latch means comprising a U-shaped member having an upper bight portion selectively movable downwardly into engagement with a forward end of said handle when in a latched position to restrict the upward movement of the rearward portion of said handle urged by said resilient means, said U-shaped member including a pair of integrally formed depending legs engaging said pivot pin, said legs being provided with indentations adapted to engage said pin when said U-shaped member is moved to its unlatched position for maintaining said member in said unlatched position.

3. A fastener driving tool comprising a frame and an actuating handle mounted for pivotal movement about a pivot pin carried by said frame between an upper actuating position and a downward storing position, resilient means normally urging said handle in a given angular direction from said storing position toward said actuating position, said handle having a forward edge movable in a path in close proximity to said frame on pivotal movement of said handle and a U-shaped locking member mounted on said pivot pin and having a central bight portion selectively movable into and out of a latched position wherein said bight portion is engaged between said frame and the forward edge of said handle preventing pivotal movement of said handle in said given angular direction from said storing position to said actuating position, said U-shaped member including a pair of integrally formed legs depending from said bight portion and engaging said pivot pin for guiding said member during reciprocal movement into and out of said latched position, said legs including resilient detent means engageable with said pivot pin for maintaining said member in an unlatched position wherein said bight portion thereof is positioned out of the path of movement of the forward edge of said handle.

4. A fastener driving tool comprising a frame and an actuating handle mounted for pivotal movement about a pivot pin carried by said frame between an upper actuating position and a downward storing position, resilient means normally urging said handle in a given angular direction from said storing position toward said actuating position, said handle having a forward edge movable in a path in close proximity to said frame on pivotal movement of said handle and a U-shaped locking member having a central bight portion selectively movable into and out of a latched position wherein said bight portion is engaged between said frame and the forward edge of said handle preventing pivotal movement of said handle in said given angular direction from said storing position to said actuation position, said locking member including a pair of legs engaging said pivot pin permitting pivotal and reciprocal movement of said member with respect thereto, said frame including notch defining means therein for receiving said bight portion when said locking member is in said latched position.

5. A fastener driving tool comprising a frame and an actuating handle mounted for pivotal movement about a pivot pin carried by said frame between an upper actuating position and a downward storing position, resilient means normally urging said handle in a given angular direction from said storing position toward said actuating position, said handle having a forward edge movable in a path in close proximity to said frame on pivotal movement of said handle and a U-shaped locking member mounted on said pivot pin and having a central bight portion selectively movable into and out of a latched position wherein said bight portion is engaged between rearwardly facing notches formed in respective side walls of said frame and the forward edge of said handle preventing pivotal movement of said handle in said given angular direction from said storing position to said actuating position, said U-shaped member including a pair of integrally formed legs depending from said bight portion and engaging said pivot pin for guiding said member during reciprocal movement into and out of said latched position, said legs including resilient detent means engageable with said pivot pin for maintaining said member in an unlatched position wherein said bight portion thereof is positioned out of the path of movement of the forward edge of said handle.

6. A fastener driving tool comprising a frame and an actuating handle pivotally mounted for angular movement about a pivot pin carried by said frame, resilient means operatively engaging said handle and frame normally urging a rearward portion of said handle pivotally upward away from said frame to an upper position in preparation for a downward actuating movement thereof by an operator of the tool and latch means selectively movable between a latched position wherein said handle is maintained in a downward position with the rearward portion thereof adjacent said frame and an unlatched position permitting said resilient means to urge the rear portion of said handle to said upper position, said latch means comprising a U-shaped member having an upper bight portion

selectively movable downwardly into engagement with a forward end of said handle when in a latched position to restrict the upward movement of the rearward portion of said handle urged by said resilent means, said U-shaped member including a pair of integrally formed depending legs engaging said pivot pin, said legs being provided with indentations adapted to engage said pin when said U-shaped member is moved to its unlatched position for maintaining said member in said unlatched position, said latch means also including upwardly extending leg means extending upwardly from said depending legs and engaging an opposite side of said pivot pin for maintaining said

latch means in continual engagement with said pin during movement between latched and unlatched positions.

References Cited by the Examiner

UNITED STATES PATENTS

2,746,044	5/1956	Cusumano et al.	227—132
2,982,966	5/1961	La Pointe et al.	227—63 X
3,095,574	7/1963	Robbins	227—132 X
3,149,339	9/1964	Johnson	227—132

GRANVILLE Y. CUSTER, JR., *Primary Examiner.*