Dec. 29, 1964 W. F. WISMAR 3,163,014

APPARATUS FOR GENERATING GASEOUS MIXTURES

Filed May 7, 1963

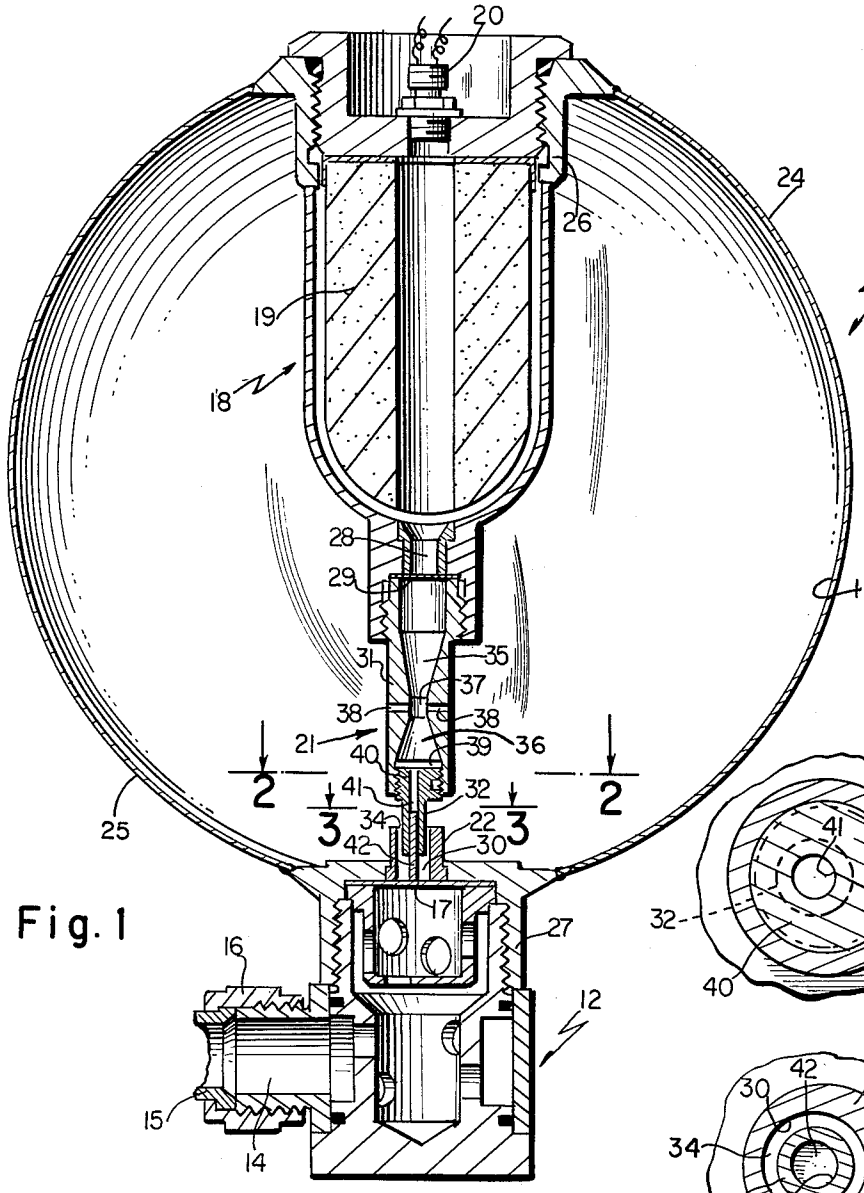

Fig. 1

Fig. 2

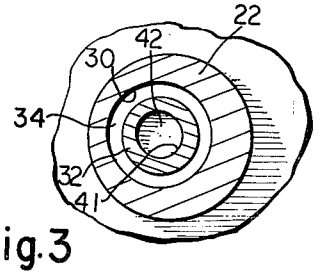

Fig. 3

INVENTOR.
WILLIAM F. WISMAR

BY

ATTORNEY

United States Patent Office 3,163,014 Patented Dec. 29, 1964

3,163,014

APPARATUS FOR GENERATING GASEOUS MIXTURES

William F. Wismar, Union, N.J., assignor to Specialties Development Corporation, Belleville, N.J., a corporation of New Jersey

Filed May 7, 1963, Ser. No. 278,637
8 Claims. (Cl. 62—48)

The present invention relates to inflating inflatable devices, and, more particularly, to improved apparatus for generating gaseous mixtures from liquefied carbon dioxide or other refrigerants and combustion products of propellants, and alcohol or other materials having a high latent heat of vaporization, if desired, which mixtures are suitable for inflating such devices.

One of the difficulties which has been encountered in the use of such apparatus is that the hot combustion gases and the refrigerant and alcohol are not thoroughly and uniformly admixed, particularly when the propellant is first ignited, with the result that hot spots are caused in the mixing chamber of the apparatus which burn out or weaken the structural elements of the apparatus. This difficulty is avoided by utilizing apparatus such as disclosed in co-pending application for United States Letters Patent, Serial No. 167,519, filed January 22, 1962, now Patent No. 3,117,424, dated January 14, 1964.

The apparatus disclosed in the aforementioned patent generally comprises a receptacle or container for confining a refrigerant under pressure and having an outlet at one end provided with a rupturable closure disc, a chamber at the end of the receptacle opposite its outlet adapted to confine a propellant for generating hot gases in the chamber and discharging the same through an outlet of the chamber, baffle means at the side of the disc facing the interior of the receptacle including a central opening, and a hot gas distributor tube having an inlet at one end connected to the chamber outlet and having an outlet at its other end arranged for directing hot gases into the central opening and having other openings for directing hot gases into the receptacle to effect admixture of the hot gases and the refrigerant.

The receptacle of such apparatus is constructed of two halves, which are welded together, with the gas generating chamber welded to one of the halves and a fitting providing the outlet and support for the baffle means welded to the other of the halves.

A difficulty encountered in making such a construction is that the making of the three welds just mentioned may cause axial misalignment or eccentricity of the central opening of the baffle means and hot gas directing outlet at the end of the tube.

Another difficulty encountered is that the closure disc may burst prematurely, that is, before thorough admixture of hot gases and refrigerant has taken place, whereby an excessive amount of uncooled hot gases is directed into the central opening and through the discharge outlet of the receptacle.

Still another difficulty is that, in cases where alcohol is also stored in the receptacle, the alcohol may settle at the bottom of the receptacle near the discharge outlet, whereby premature opening of the discharge outlet allows the alcohol to be expelled before being completely vaporized and admixed with the hot combustion gases and the refrigerant.

Accordingly, the primary object of the present invention is to provide improved apparatus for thoroughly and uniformly mixing hot combustion gases, refrigerant and alcohol which is constructed of minimum of parts and requires a minimum number of assembling operations and overcomes the foregoing difficulties and disadvantages.

Another object is to provide such apparatus which delays opening of the discharge outlet until the materials in the receptacle have been thoroughly admixed.

A further object is to provide such apparatus which is readily assembled and enables parts to be aligned.

Other and further objects of the invention will be obvious upon an understanding of the illustrative embodiment about to be described, or will be indicated in the appended claims, and various advantages not referred to herein will occur to one skilled in the art upon employment of the invention in practice.

A preferred embodiment of the invention has been chosen for purposes of illustration and description, and is shown in the accompanying drawing, forming a part of the specification, wherein:

FIG. 1 is a vertical longitudinal sectional view of apparatus in accordance with the present invention.

FIG. 2 is an enlarged sectional view taken along the line 2—2 of FIG. 1.

FIG. 3 is an enlarged sectional view taken along the line 3—3 on FIG. 1.

Referring to the drawing in detail, a gas generator 10 for producing a mixture of gases is shown which generally comprises a container 11 for confining carbon dioxide or other refrigerants (and alcohol, if desired); an outlet assembly 12 having an outlet 14 for connection of a conduit thereto by a coupling 16; a valve or closure such as a pressure rupturable disc 17 for normally sealing the container and allowing discharge of the gaseous mixture through the outlet upon rupture thereof; a hot gas generating chamber 18 opposite the outlet including a charge 19 of propellant and an electrically actuated squib 20 for igniting the charge; a gas mixing arrangement including nozzle means 21 and a baffle sleeve 22 mounted above the sealing disc 17.

The container 10, as shown, preferably is generally spherical and has hemi-spherical upper and lower sections 24 and 25, although the container may be generally cylindrical and may have hemi-spherical end domes similar to the sections 24 and 25. The upper section 24 has a central tubular portion 26 located within the container for securing the chamber 18 and the lower section 25 has a central external tubular portion 27 for mounting the outlet assembly 12. The chamber 18 has an outlet 28 facing the outlet assembly and has the nozzle means 21 connected thereto with a pressure rupturable disc 29 normally sealing the outlet 28 and allowing discharge of hot gases through this outlet upon rupture of the disc 29.

The baffle sleeve 22 is a cylindrical member having a bore 30 facing the nozzle means, and is rotatably mounted and secured over the outlet sealing disc 17.

The nozzle means comprise a body section 31 secured over the disc 29 at its upper end, and a tubular member 32 connected to the lower end of the body section and extending partially into the bore 30 of the baffle sleeve 22 to provide an annular space 34 between it and the sleeve which space is in fluid flow communication with the interior of the container.

The body section 31 is formed with a bore which includes upper and lower flared sections 35 and 36 formed with a throat 37 therebetween, side outlets 38 establishing fluid flow communication between the interior of the container and the bore at the throat 37, and a cylindrical portion 39 below the lower section 36.

The tubular member 32 has a cylindrical enlargement or head 40 rotatably mounted in the bore portion 39 and adapted to be secured therein, and has a bore 41 extending therethrough which constitutes the outlet for the nozzle means 21.

In order to prevent premature bursting of the disc 17, a plug 42 is slidably mounted in the bore 41 to close the

same, preferably with its lower end in contact with the disc 17, whereby the plug is retained in the bore 41 and serves as a closure for it until the disc 17 is ruptured.

In order to center or axially align the tubular member 32 with respect to the bore 30 of the sleeve 22 so that the annular space 34 is of equal dimension throughout its circumference, either or both the bores 30 and 41 may be eccentrically disposed in relation to the sleeve 22 and the head 40 respectively, whereby either or both the sleeve 22 and the member 32 can be rotated to adjust the annular space 34 to equal dimensions before being secured in a fixed position. This can be accomplished without interfering with the positioning of the plug 42 on the disc 17.

In operation, when the charge 19 is ignited, pressure is built up in chamber 18 which causes the disc 29 to burst. The hot combustion gases are directed through the openings 38 into container to heat the refrigerant and increase its pressure. While the disc 17 remains intact, the hot combustion gases are prevented from passing directly to the opening closed by the disc 17 because of the plug 42, but a mixture of combustion gases and refrigerant are baffled through the annular space 34 and act on the disc 17. When this mixture of gases attains a sufficient pressure, the disc 17 is ruptured and the plug 42 uncloses the bore 41. The combustion gases now flowing through the venturi-like bore of the nozzle 21 tend to entrain the mixture of gases in the container by way of the openings 38 at the throat 37, whereby mixtures of combustion gases and refrigerant enter the bore 30 of the sleeve 22 both by way of the annular space 34 and the bore 41 for further admixture in the outlet assembly before entering the conduit.

While the present invention has been described in connection with producing mixtures of gases primarily suitable for inflation by way of example, it will be understood that the apparatus disclosed herein could likewise be employed for generating gases at pressures capable of operating pressure medium actuated mechanisms.

From the foregoing description, it will be seen that the present invention provides improved apparatus for producing mixtures of useful gases in a simple and reliable manner.

As various changes may be made in the form, construction and arrangement of the parts herein, without departing from the spirit and scope of the invention and without sacrificing any of its advantages, it is to be understood that all matter herein is to be interpreted as illustrative and not in any limiting sense.

I claim:

1. Apparatus for producing a mixture of gases under pressure comprising a container confining a refrigerant under pressure having an outlet at its lower end; a closure sealing said outlet constructed and arranged to rupture in response to a predetermined pressure within said container; a source of hot combustion gases at the opposite end of said container including depending nozzle means having an outlet bore facing said closure; and a plug slidably mounted in said bore having a lower end engaging said closure to retain said plug in said bore and close the same until said closure is ruptured.

2. Apparatus according to claim 1, wherein said nozzle means has aperture means above the upper end of said plug for directing combustion gases into said container.

3. Apparatus according to claim 1, including a sleeve mounted above said closure into which said bore extends to provide an annular passageway.

4. Apparatus according to claim 3, wherein said nozzle means include a body section formed with a cylindrical bore and a member having a circular portion rotatably mounted in said cylindrical bore and having said first mentioned bore formed therein eccentrically disposed with respect to said circular portion, whereby said member can be adjusted to center its said bore with the center of said sleeve.

5. Apparatus according to claim 1, wherein said nozzle means include a body section formed with a cylindrical bore and a member having a circular portion rotatably mounted in said cylindrical bore and having said first mentioned bore formed therein eccentrically disposed with respect to said circular portion, whereby said member can be adjusted to center said plug on said closure.

6. Apparatus according to claim 1, including a sleeve rotatably mounted above said closure and having an eccentrically disposed bore into which said first mentioned bore extends to provide an annular passageway, whereby said sleeve can be adjusted to center the bore of said sleeve with the center of said first mentioned bore.

7. Apparatus for producing a mixture of gases under pressure comprising a container confining a refrigerant under pressure having an outlet at its lower end; a closure disc sealing said outlet constructed and arranged to rupture in response to a predetermined pressure within said container; a sleeve mounted on said closure disc, a source of hot combustion gases at the opposite end of said container having a discharge opening; a nozzle having an inlet in fluid flow connection with said discharge opening, an outlet port extending into said sleeve and a passageway between its said inlet and said outlet port provided with side openings in fluid flow communication with the interior of said container; and means for closing said outlet port rendered ineffective upon rupture of said closure disc.

8. Apparatus for producing a mixture of gases under pressure comprising a container confining a refrigerant under pressure having an outlet at its lower end; a closure disc sealing said outlet constructed and arranged to rupture in response to a predetermined pressure within said container; a sleeve mounted on said closure disc, a source of hot combustion gases at the opposite end of said container having a discharge opening; a nozzle having an inlet in fluid flow connection with said discharge opening, an outlet port, a passageway between its said inlet and said outlet provided with side openings in fluid communication with the interior of said container; a tubular member secured in said outlet having passageway means extending therethrough and into said sleeve; and means slidably positioned in said passageway means for sealing the same and engaging said closure disc to enable displacement thereof upon rupture of said closure disc.

References Cited in the file of this patent

UNITED STATES PATENTS

2,902,822	McKiernan	Sept. 8, 1959
2,989,381	Musser	June 20, 1961
3,091,081	Alper et al.	May 28, 1963