(19) Europäisches Patentamt
European Patent Office
Office européen des brevets

(11) Publication number: **0 063 902**
B1

(12) # EUROPEAN PATENT SPECIFICATION

(45) Date of publication of patent specification: **26.06.85**

(51) Int. Cl.⁴: **B 41 J 3/04**

(21) Application number: **82301962.5**

(22) Date of filing: **16.04.82**

(54) **An ink jet printing machine.**

(30) Priority: **17.04.81 US 255017**
25.09.81 US 305583

(43) Date of publication of application:
03.11.82 Bulletin 82/44

(45) Publication of the grant of the patent:
26.06.85 Bulletin 85/26

(84) Designated Contracting States:
DE IT

(56) References cited:
US-A-4 032 929
US-A-4 243 995

(73) Proprietor: **XEROX CORPORATION**
Xerox Square - 020
Rochester New York 14644 (US)

(72) Inventor: **Debesis, John R.**
146 Valley Green Drive
Penfield New York 14526 (US)
Inventor: **Sultan, Bertil S.**
1606 Valleycrest
Carrollton Texas 75006 (US)

(74) Representative: **Prior, Nicholas J. European Patent Attorney et al**
Rank Xerox Patent Department 338 Euston Road
London NW1 3BH (GB)

EP 0 063 902 B1

Note: Within nine months from the publication of the mention of the grant of the European patent, any person may give notice to the European Patent Office of opposition to the European patent granted. Notice of opposition shall be filed in a written reasoned statement. It shall not be deemed to have been filed until the opposition fee has been paid. (Art. 99(1) European patent convention).

Courier Press, Leamington Spa, England.

Description

This invention relates generally to an ink jet printing machine, and more particularly concerns isolating adjacent ink jet nozzles from one another to prevent interaction therebetween.

Generally, an ink jet printing machine has an array of small nozzles with each nozzle having a chamber containing ink associated therewith. Upon excitation, an electromechanical transducer varies the volume of the chamber producing a temporary increase in pressure forcing a droplet of ink to be ejected from the corresponding nozzle. These individual droplets of ink are sprayed onto a copy sheet. One column of vertical drops is referred to as a scan. If, in forming a character, a particular space in a scan is to be left blank, the transducer associated with the appropriate nozzle remains de-energized and a droplet of ink is not ejected from the nozzle. Thus, drops of ink are deposited in appropriate positions on the copy sheet to form the desired character. Ink jet printing machines of this type are described in U.S. Patent No. 3,683,212 issued to Zoltan in 1972; U.S. Patent No. 3,747,120 issued to Stemme in 1973; U.S. Patent No. 3,832,579 issued to Arndt in 1974; and U.S. Patent No. 3,871,004 issued to Rittberg in 1975.

One of the problems in a printing machine of this type is excitation of the transducer associated with a selected nozzle frequently introduces cross-coupling between adjacent nozzles. Thus, not only may the desired nozzle be excited, but other nozzles adjacent thereto also may be excited.

Various approaches have been devised to improve ink jet printing.

U.S. Patent No. 4032929 discloses a multiple nozzle unit having an ink supply chamber. A piezoelectric layer is excited to deform or decrease the volume of the respective chamber to cause a droplet of ink to be ejected from the nozzle.

U.S. Patent No. 4057807 describes an ink jet assembly in which excitation of an electromagnet deforms a diaphragm to decrease the volume of an ink chamber. Decreasing the volume of the chamber causes ink to be ejected from a nozzle in communication therewith.

U.S. Patent No. 4243995 describes an ink jet recording system in which a piezoelectric transducer is positioned partially in the ink channel. The piezoelectric transducer expands when excited acting like a piston to eject ink from the nozzle.

An ink jet printing machine according to the present invention has an array of nozzles, means for storing a supply of writing fluid for each nozzle of said array of nozzles, and means for energizing selected nozzles of said array of nozzles to eject spaced droplets of writing fluid therefrom, and is characterised by means for interposing a damping medium in the form of air, a fluid or a liquid, between said storing means for isolating the nozzles of said array of nozzles from one another to prevent interaction between said nozzles from energizing nozzles other than the selected nozzles of said array of nozzles.

In order that the invention may be more readily understood, reference will now be made to the accompanying drawings, in which:

Figure 1 is an elevational view, partially in section, depicting an ink jet module of a machine of the present invention;

Figure 2 is a sectional elevational view taken in the direction of the arrows 2—2 of Figure 1;

Figure 3 is an elevational view, partially in section, showing an array of ink jet modules;

Figure 4 is an elevational view, partially in section, showing another embodiment of an array of ink jet modules;

Figure 5 is a fragmentary perspective view illustrating the corrugated members of Figure 4 for isolating adjacent ink jet modules from one another;

Figure 6(a) is an elevational view showing one embodiment of the corrugated members depicted in Figure 5; and

Figure 6(b) is an elevational view illustrating another embodiment of the corrugated members depicted in Figure 5.

Referring to Figures 1 and 2, there is shown an ink jet module 10 arranged to eject droplets of writing fluid or ink therefrom. Ink jet module 10 includes a nozzle 12 in communication with tube 14 in housing 16. An inlet portion 18 of tube 14 is connected to a supply of writing ink. A piezoelectric transducer 20 is positioned closely adjacent tube 14. Piezoelectric transducer 20 is encapsulated in an elastomeric material such as urethane 22. An electric voltage pulse generator (not shown) is connected to piezoelectric transducer 20 by electrical lead wire 24. Rectangular recessed portions 28 are formed in housing 16 to define slots between adjacent ink jet modules. These slots are preferably filled with air so as to reduce cross coupling between adjacent ink jet modules. Alternatively, these slots may be filled with a liquid. All of the recessed portions are preferably about the same volume. In this manner, each recessed portion is one half of the volume of the slot separating adjacent ink jet modules. Excitation of piezoelectric transducer 20 causes tube 14 to be compressed or restricted in size. In this way, a droplet of ink or writing fluid is ejected from nozzle 12. Preferably, piezoelectric transducer 20 is made from piezoceramic PZT-5, available from Vernitron Piezoelectric Division, Bedford, Ohio, U.S.A.

Housing 16 is preferably formed by casting a plastic material, such as urethane. Piezoelectric transducer 20 is at least partially secured to housing 16. Nozzle 12 is also secured to housing 16.

As shown in Figure 3, a linear array of ink jet modules are formed by placing each ink jet module of Figure 2 adjacent to another. As depicted thereat, the recessed portions 28 of adjacent ink jet modules are aligned with one another to define slots therebetween. In this way,

adjacent ink jet assemblies are isolated from one another. This is achieved by the air spaces in the slots between adjacent modules. The air between adjacent ink jet modules acts as a damping medium to insure that surface to surface contact, between adjacent ink jet modules, is minimized. Hence, when one of the ink jet modules is actuated by energizing a selected piezoelectric transducer, adjacent ink jet modules remain deactivated, i.e. there is no cross coupling between the adjacent ink jet modules or interaction therebetween due to the isolation provided by the slots therebetween. Preferably, these slots are air filled, but the slots may be filled with any suitable fluid including a liquid.

Turning now to Figures 4 and 5, another embodiment of a linear array of ink jet modules is formed. As shown in Figure 4, corrugated plates 29 are arranged between the modules. The plates may be formed with the sides of the modules or arranged in the recesses 28. In this way, adjacent ink jet assemblies are isolated from one another. This is achieved by the corrugations forming air spaces between adjacent modules. The air between adjacent ink jet modules acts as a damping medium. The corrugations insure that there is no surface to surface contact between adjacent ink jet-modules, but rather a plurality of point contacts. Hence, when one of the ink jet modules is actuated by energizing a selected piezoelectric transducer, adjacent ink jet modules remain de-activated, i.e. there is no cross coupling between the adjacent ink jet modules or interaction therebetween due to the isolation provided by corrugated plates 29.

As shown in Figure 5, a wall 30 of plate 29 intersects with a wall 32 thereof at an apex 34. A plurality of apexes of a plate of one module contact the apexes of the plate of the next adjacent ink jet module. Thus, each plate 29 is a corrugated member comprising a series of triangular members connected to one another. The axis formed by the apexes of one plate 29 are substantially normal in direction to the axis formed by apexes of the next adjacent plate. In this way, a series of multiplicity of point contacts between adjacent ink jet modules occur rather than surface or area contact therebetween. Air is interposed between adjacent ink jet modules to provide damping therebetween. Preferably, wall 30 intersects wall 32 of each plate 29 at a 90° angle at apex 34.

Figure 6(a) depicts one embodiment of the relationship between adjacent plates 29. As shown thereat, all of the walls 30 and 32 of each plate 29 intersect at the same angle at apex 34. As previously indicated, this angle is preferably 90°. Under these circumstances, all of the apexes 34 of one wall 29 will contact all of the apexes of the next adjacent wall.

Alternatively, as shown in Figure 6(b), walls 30 and 32 may intersect one another at apexes 34 at different angles or the walls may be of different lengths. Under these circumstances, a plurality of apexes 34 will be spaced from the next adjacent plate 29. Thus, only periodic apexes 34 will contact the next adjacent plate 29. This further minimizes interaction between adjacent ink jet modules in that the contact therebetween is further reduced and more damping provided. The greater damping is introduced by the increase in air between adjacent plates 29. Moreover, the contact between adjacent plates 29 is greatly reduced in that contact will occur only periodically along discreet points rather than at each apex as is shown in Figure 5(a).

It will be appreciated that while plates 29 have been depicted herein as being corrugated, other configurations may be employed. Thus, any plate having a plurality of protuberances extending outwardly therefrom may function to isolate adjacent ink jet modules from one another. These protuberances could be dimples, grooves, creases, or any other such arrangement.

In recapitulation, it is clear that the ink jet printing machine of the present invention includes a linear array of nozzles with adjacent nozzles being isolated from one another to prevent interaction therebetween when a selected nozzle is energized. Isolation of adjacent nozzles is achieved by interposing a damping medium therebetween. This damping medium is disposed in slots between adjacent nozzles and tends to prevent cross coupling. In this way, interaction is minimized and only the selected nozzle will be energized rather than both the selected nozzle and adjacent nozzles.

Claims

1. An ink jet printing machine, comprising an array of nozzles (12);

means (14) for storing a supply of writing fluid for each nozzle (12) of said array of nozzles; and

means (20) for energizing selected nozzles (12) of said array of nozzles to eject spaced droplets of writing fluid therefrom; characterised by means (28 or 29) for interposing a damping medium in the form of air, a fluid or a liquid, between said storing means for isolating the nozzles (12) of said array of nozzles from one another to prevent interaction between said nozzles from energizing nozzles other than the selected nozzles of said array of nozzles.

2. A printing machine according to claim 1, characterised in that said storing means (14) includes a plurality of housings (16) with each of said plurality of housings (16) having a channel (14) therein in communication with one of the nozzles (12) of said array of nozzles, and said damping medium is interposed between the adjacent housings (16).

3. A printing machine according to claim 2, characterised in that said interposing means (28 or 29) includes at least one recessed portion (28) formed in each of said plurality of housings (16).

4. A printing machine according to claim 3 characterised in that opposed recessed portions (28) of adjacent ones of said plurality of housings (16) are aligned with one another to define a slot

between adjacent ones of said plurality of housings, each of the recessed portions (28) of said plurality of housings (16) preferably having substantially equal volumes.

5. A printing machine according to claim 2, characterised in that said interposing means (28 or 29) includes at least one corrugated member (29) interposed between adjacent housings (16) of said plurality of housings.

6. A printing machine according to claim 5, characterised in that the apexes (34) of the intersecting walls (30, 32) of one of said corrugated members (29) engage the apexes (34) of intersecting walls (30, 32) of the adjacent corrugated member (29), the apexes (34) of the intersecting walls (30, 32) of each said corrugated member (29) preferably being substantially normal to one another.

7. A printing machine according to claim 6, characterised in that the apexes (34) of the intersecting walls (30, 32) of said corrugated member (29) engaging the adjacent corrugated member (29) have apexes (34) thereof interposed therebetween and spaced from the adjacent corrugated member (29).

8. A printing machine according to claim 2, characterised in that said interposing means (28 or 29) includes a member having a plurality of spaced protuberances extending outwardly therefrom, said member being interposed between adjacent housings of said plurality of housings.

9. A printing machine according to any of claims 2—8, characterised in that said energizing means (20) includes a plurality of transducers, preferably piezoelectric members, each of said transducers (20) being positioned closely adjacent to the channel (14) in one of said plurality of housings (16) so that activation of said transducer (20) ejects droplets of writing fluid from the nozzle (12) in communication with the channel (14) adjacent said transducer (20).

Patentansprüche

1. Tintenstrahldrucker mit einer Anordnung von Düsen (12), mit Einrichtungen (14) zum Speichern eines Vorrats eines Schreibfluids für jede Düse (12) der genannten Düsenanordnung, und mit Einrichtungen (20) zum Erregen ausgewählter Düsen (12) der genannten Düsenanordnung, um voneinander getrennte Tröpfchen des Schreibfluids auszustoßen, gekennzeichnet durch Mittel (28 oder 29) zum Halten eines Dämpfungsmediums in der Form von Luft, eines Fluids oder einer Flüssigkeit zwischen den genannten Speichereinrichtungen zum Isolieren der Düsen (12) der genannten Düsenanordnung voneinander, um zu verhindern, daß Wechselwirkungen zwischen den genannten Düsen andere als die ausgewählten Düsen der genannten Düsenanordnung erregen.

2. Tintenstrahldrucker nach Anspruch 1, dadurch gekennzeichnet, daß die genannten Speichereinrichtungen (14) eine Mehrzahl von Gehäusen (16) umfassen, daß in jedem Gehäuse (16) ein mit einer Düse (12) der genannten Düsenanordnung in Verbindung stehender Kanal (14) ausgebildet ist, und daß das genannte Dämpfungsmedium zwischen benachbarten Gehäusen (16) angeordnet ist.

3. Tintenstrahldrucker nach Anspruch 2, dadurch gekennzeichnet, daß die genannten Haltemittel (28 oder 29) wenigstens einen vertieften Teil (28) aufweisen, der in jedem der genannten Gehäuse (16) ausgebildet ist.

4. Tintenstrahldrucker nach Anspruch 3, dadurch gekennzeichnet, daß einander gegenüberliegende vertiefte Teile (28) benachbarter Gehäuse (16) aufeinander ausgerichtet sind, um einen Schlitz zwischen benachbarten Gehäusen (16) zu bilden, wobei die vertieften Teile (28) der genannten Gehäuse (16) vorzugsweise im wesentlichen gleiche Volumina aufweisen.

5. Tintenstrahldrucker nach Anspruch 2, dadurch gekennzeichnet, daß die genannten Haltemittel (28 oder 29) wenigstens einen gewellten Teil (29) aufweisen, der zwischen benachbarten Gehäusen (16) der genannten Mehrzahl von Gehäusen angeordnet ist.

6. Tintenstrahldrucker nach Anspruch 5, dadurch gekennzeichnet, daß die Spitzen (34) der sich schneidenden Wände (30, 32) eines der genannten gewellten Teile (29) mit den Spitzen (34) der sich schneidenden Wände (30, 32) des benachbarten gewellten Teils (29) im Eingriff sind, wobei die Spitzen (34) der sich schneidenden Wände (30, 32) jedes genannten gewellten Teils (29) vorzugsweise im wesentlichen normal zueinander angeordnet sind.

7. Tintenstrahldrucker nach Anspruch 6, dadurch gekennzeichnet, daß die Spitzen (34) der sich schneidenden Wände (30, 32) des genannten gewellten Teils (29), der im Eingriff mit dem benachbarten gewellten Teil (29) ist, Spitzen (34) aufweisen, welche dazwischen und mit Abstand von dem benachbarten gewellten Teil (29) angeordnet sind.

8. Tintenstrahldrucker nach Anspruch 2, dadurch gekennzeichnet, daß die Haltemittel (28 oder 29) einen Teil mit einer Mehrzahl von Vorsprüngen aufweisen, die mit gegenseitigen Abständen angeordnet, sich von dem genannten Teil nach außen erstrecken, wobei der genannte Teil zwischen benachbarten Gehäusen der genannten Mehrzahl von Gehäusen angeordnet ist.

9. Tintenstrahldrucker nach irgendeinem der Ansprüche 2 bis 8, dadurch gekennzeichnet, daß die genannten Erregereinrichtungen (20) eine Mehrzahl von Wandlern, vorzugsweise piezoelektrischen Gliedern, aufweisen, wobei jeder der genannten Wandler (20) dicht angrenzend an den Kanal (14) in einem der genannten Gehäuse (16) angeordnet ist, do daß durch Aktivieren des genannten Wandlers (20) Tröpfchen des Schreibfluids aus der in Verbindung mit dem dem genannten Wandler (20), benachbarten Kanal (14) stehenden Düse (12) ausgestoßen werden.

Revendications

1. Machine d'impression à jet d'encre comprenant un réseau d'ajutages (12);

— un moyen (14) de stockage d'une fourniture de fluide d'écriture pour chaque ajutage (12) du réseau d'ajutages; et
— un moyen (20) d'activation des ajutages sélectionnés (12) du réseau d'ajutages afin d'en éjecter des gouttelettes espacées de fluide d'écriture; caractérisée par un moyen (28 ou 29) pour interposer un milieu d'amortissement sous forme d'air, d'un fluide ou d'un liquide entre le moyen de stockage afin d'isoler les ajutages (12) du réseau d'ajutages les uns des autres et éviter qu'une interfraction entre les ajutages n'active des ajutages autres que les ajutages sélectionnés du réseau d'ajutages.

2. Machine d'impression selon la revendication 1, caractérisée en ce que le moyen de stockage (14) comprend une pluralité de logements (16), avec chaque logement de la pluralité de logements (16) comportant un canal (14) qui communique avec l'un des ajutages (12) du réseau d'ajutages, et le milieu d'amortissement est interposé entre les logements contigus (16).

3. Machine d'impression selon la revendication 2, caractérisée en ce que le moyen d'interposition (28 ou 29) comprend au moins une partie évidée (28) ménagée dans chaque logement de la pluralité de logements (16).

4. Machine d'impression selon la revendication 3, caractérisée en ce que des parties évidées opposées (28) de logements contigus de la pluralité de logements (16) sont alignées les unes avec les autres afin de définir une fente entre des logements contigus de la pluralité de logements, les parties évidées (28) de la pluralité de logements (16) ayant de préférence sensiblement le même volume.

5. Machine d'impression selon la revendication 2, caractérisée en ce que le moyen d'interposition (28 ou 29) comprend au moins un élément ondulé (29) interposée entre des logements contigus (16) de la pluralité de logements.

6. Machine d'impression selon la revendication 5, caractérisée en ce que les pointes (34) des parois d'intersection (30, 32) d'un des éléments ondulés (29) sont en contact avec les pointes (34) des parois d'intersection (30, 32) de l'élément ondulé contigu (29), les pointes (34) des parois d'intersection (30, 32) de chaque élément ondulé (29) étant de préférence sensiblement perpendiculaires les unes aux autres.

7. Machine d'impression selon la revendication 6, caractérisée en ce que les pointes (34) des parois d'intersection (30, 32) de l'élément ondulé (29) en contact avec l'élément ondulé contigu (29) ont leurs pointes (34) interposées entre eux et espacées de l'élément ondulé contigu (29).

8. Machine d'impression selon la revendication 2, caractérisée en ce que le moyen d'interposition (28 ou 29) comprend un élément comportant une pluralité de saillies espacées qui s'étendent vesr l'extérieur à partir de lui, l'élément étant interposé entre des logements contigus de la pluralité de logements.

9. Machine d'impression selon l'une quelconque des revendications 2 à 8, caractérisée en ce que le moyen d'activation (20) comprend une pluralité de transducteurs, de préférence des éléments piézoélectriques, chaque transducteur (20) étant placé en un endroit étroitement contigu au canal (14) dans un logement de la pluralité de logements (16) de sorte que l'activation du transducteur (20) a pour effet d'éjecter des gouttelettes de fluide d'écriture à partir de l'ajutage (12) communiquant avec le canal (14) contigu à ce transducteur (20).

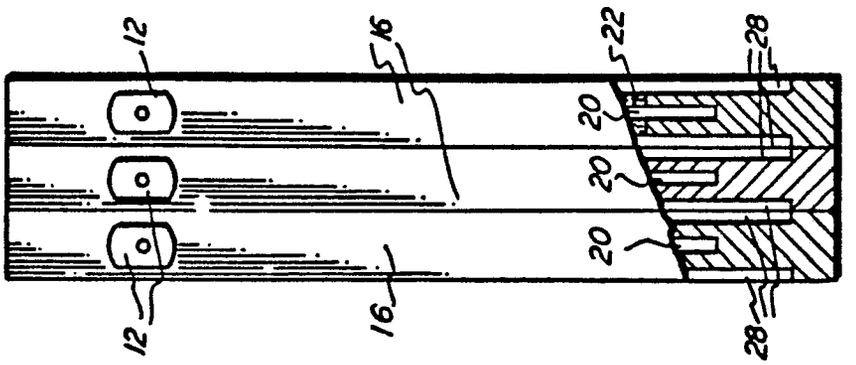

FIG. 3

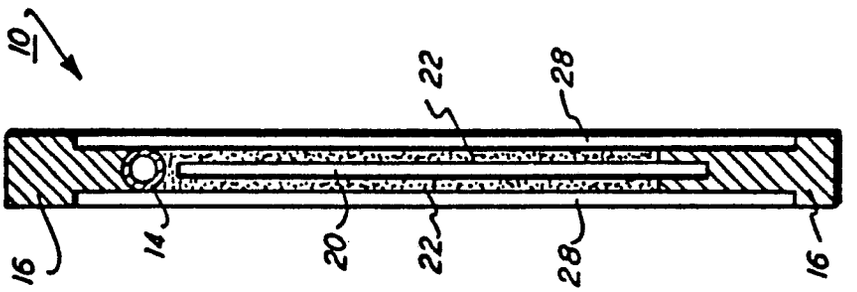

FIG. 2

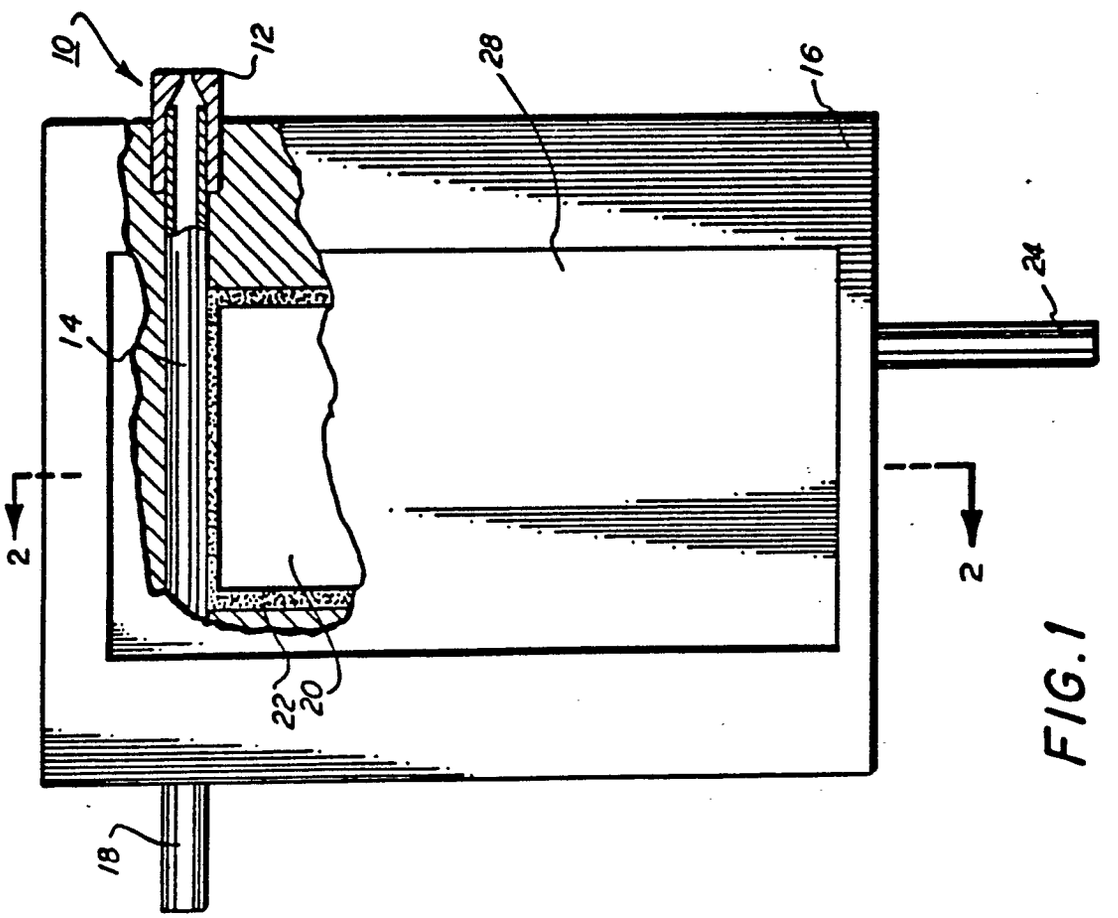

FIG. 1

FIG. 5

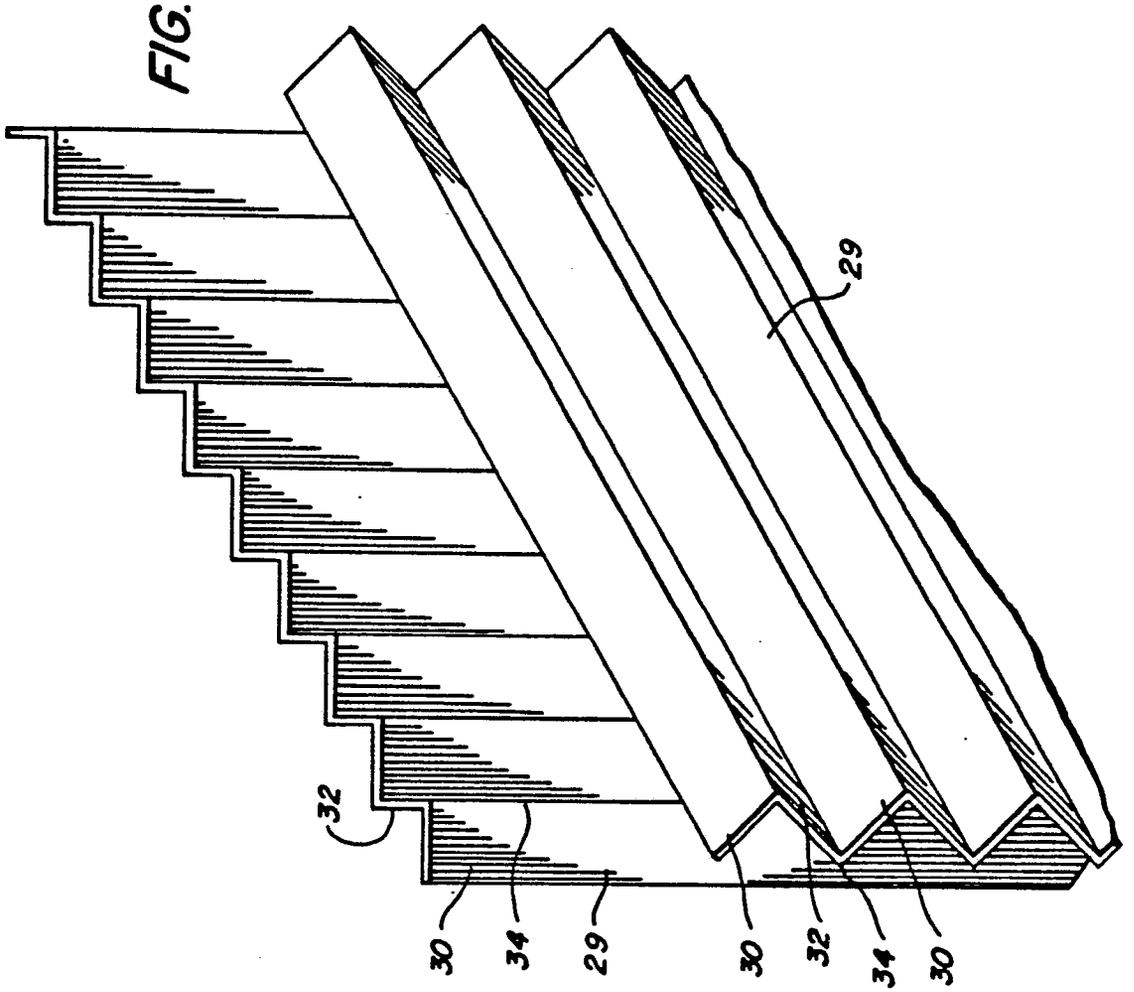

FIG. 4

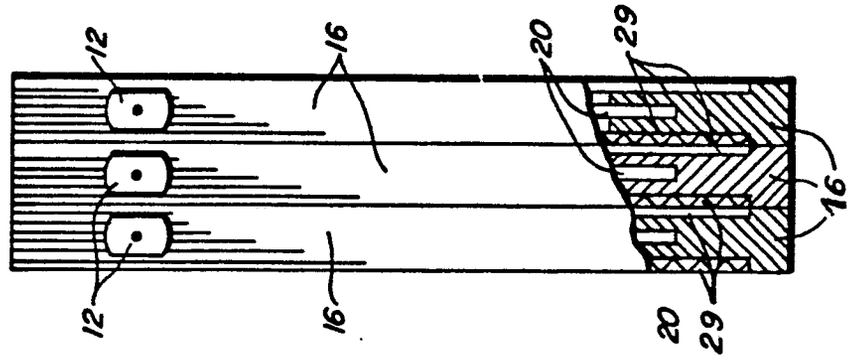

FIG. 6A

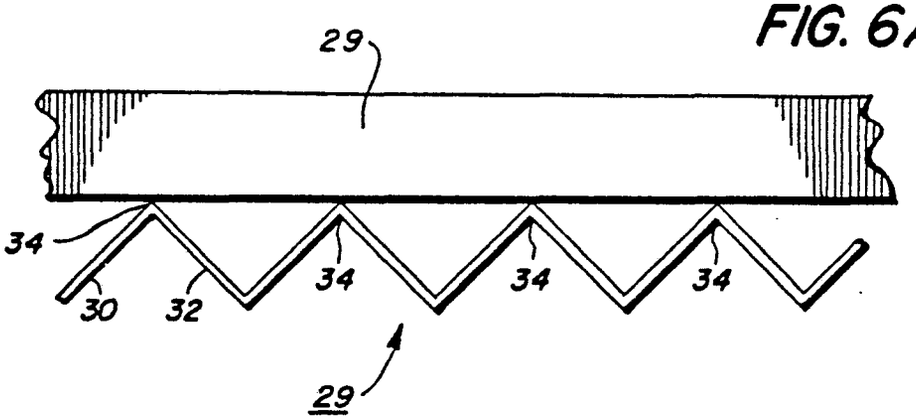

FIG. 6B

