Aug. 24, 1948. L. B. SALISBURY 2,447,774

THIMBLE

Filed Nov. 23, 1946

FIG. 1.

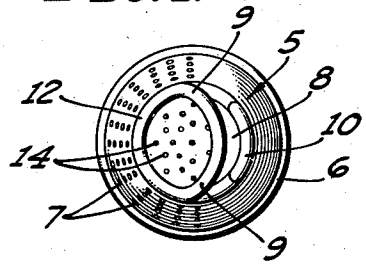

FIG. 2.

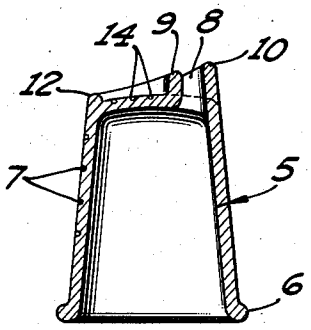

FIG. 3.

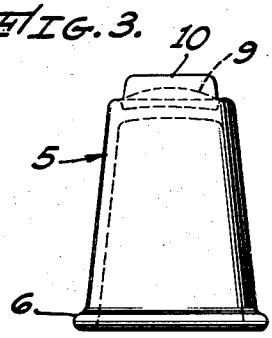

FIG. 4.

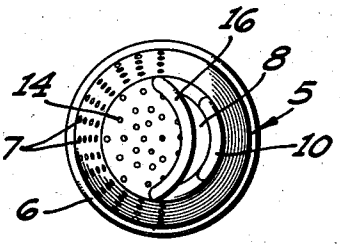

FIG. 5.

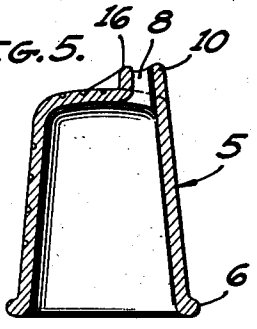

FIG. 6.

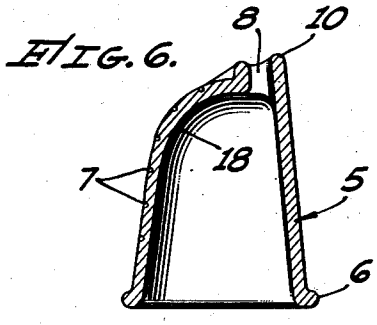

LEONARD BYRON SALISBURY,
INVENTOR.

BY Ord R. Hoehaw

ATTORNEY.

Patented Aug. 24, 1948 2,447,774

UNITED STATES PATENT OFFICE

2,447,774

THIMBLE

Leonard B. Salisbury, La Crescenta, Calif., assignor, by mesne assignments, of one-half to Sidney Leviton and Bernard Leviton, both of Los Angeles, Calif.

Application November 23, 1946, Serial No. 711,955

5 Claims. (Cl. 223—101)

1

This invention relates to thimbles, and particularly to a thimble which is more convenient to use and more efficient in use.

Sewing thimbles are well-known and have been constructed in various forms and types, the general form of the present thimble for use by persons with long finger nails having also been suggested. The present invention is of the type wherein provision is made to accommodate the finger nails, regardless of their length, while, at the same time, preserving the usual and normal thimble action. Heretofore, a raised central portion with a recess therein has been provided, the outside end surface of the thimble necessarily being removed from the finger tip. The present invention provides relief for the nail while permitting the fleshy part of the finger to be separate from the working end surface of the thimble only by the thickness of the material. In this manner, the end of the needle is not placed at a point hard to manipulate by the finger.

The principal object of the invention, therefore, is to facilitate the manipulation of a sewing thimble under all conditions.

Another object of the invention is to provide an improved sewing thimble which may be effectively used by persons with long finger nails.

A further object of the invention is to provide a sewing thimble which accommodates long finger nails and is more comfortable and efficient during use.

Although the novel features which are believed to be characteristic of this invention will be pointed out with particularity in the appended claims, the manner of its organization and the mode of its operation will be better understood by referring to the following description read in conjunction with the accompanying drawings, forming a part hereof, in which:

Fig. 1 is a plan view of one embodiment of the invention.

Fig. 2 is a cross-sectional view in elevation of the embodiment of Fig. 1.

Fig. 3 is an elevational view of the embodiments of Figs. 1 and 2.

Fig. 4 is a plan view of a second embodiment of the invention.

Fig. 5 is a cross-sectional view in elevation of the embodiment of Fig. 4, and

Fig. 6 is a cross-sectional view in elevation of a modification of the contours of the invention.

Referring now to the drawings, in which the same numerals identify like elements, a casing or shell 5 of the thimble has a flared rim 6 at its open end, and, along one-half of the outer

2

surface thereof, it has a plurality of indentations 7 to form the usual dimpled surface of the standard type of thimble. It is unnecessary that the dents 7 be placed completely around the thimble because the thimble has one working position.

The working end of the thimble, as shown in Figs. 1, 2, and 3, has an opening 8 in the form of a crescent between an inner extending rim 9 and an outer rim 10, the inner rim 9 being continuous to form a raised lip or rim 12 at the front of the thimble, as shown in Fig. 2. The end of the thimble within the raised inner rim 9 has the regular dimpled surface 14 to accommodate the end of the needle as is usual practice. In using a thimble of this type, the finger is inserted with the back side of the finger lying against the side of the needle with the extension 10, thus permitting the finger nail to pass through the opening 8. The fleshy part of the finger thereby contacts the inner side of the working end of the thimble. The continuous raised rim 9—12 provides complete safety from a slipping needle.

Referring now to Figs. 4 and 5, a similar type of structure is shown, except in this instance, the inner segment or rim 9 of Figs. 1 and 2 extends only partially around the tip end of the thimble, as shown at 16. That is, instead of having the front rim 12, shown in Fig. 2, this edge of the thimble surface is now smooth and continuous with the outer shell 5. In some instances, it has been found that although the lip 12 provides a protection, certain sewers find that this rim hinders their type of manipulation of the thimble, and the extended rim 16 provides all the protection necessary.

Referring now to Fig. 6, the interior contour of the thimble has been modified so as to accommodate the contour of the end of the finger, as shown at 18. The outer contour may also follow a similar curve which is preferred by some sewers. This interior contour 18 may also be embodied in the thimble forms shown in Figs. 1, 2, 3, and 4. As mentioned above, the thimble of this invention has one position upon the finger, and will always be used in that manner, the opening 8 accommodating any length of finger nail, while permitting the fleshy part of the finger to be in close contact with the working tip surface of the thimble for better manipulation of a needle.

I claim:

1. A thimble comprising a tapered substantially cylindrical shell having a closed end, said closed end of the shell having a crescent opening

over an annular section of its surface, and said end having a raised rim extending around the edge of said crescent opening.

2. A thimble comprising a tapered substantially cylindrical shell having a closed end, said closed end of the shell having a crescent opening over an annular section of its surface, and said closed end portion of said thimble having a raised rim extending around said crescent opening and around the edge of the surface of said closed end of said shell.

3. A thimble comprising a tapered substantially cylindrical shell having a closed tip portion, said tip portion having an opening over a portion of an annular section thereof, the interior of the thimble being curved to fit the contour of the finger, and a rim raised above the surface of said tip portion being provided around the edge of said opening.

4. A thimble comprising a tapered substantially cylindrical shell having a closed tip portion, said tip portion having an opening over a portion of an annular section thereof, the interior of the thimble being curved to fit the contour of the finger, and a rim raised above the surface of said tip portion being provided around the edge of said opening, said rim also extending completely around the edge of said tip portion.

5. A thimble comprising a tapered substantially cylindrical shell having a closed end portion, said end portion having a substantially crescent slot therein to accommodate the finger nail of a wearer and having a raised rim around the edge of said slot.

LEONARD B. SALISBURY.

REFERENCES CITED

The following references are of record in the file of this patent:

UNITED STATES PATENTS

Number	Name	Date
1,522,484	Baker	Jan. 13, 1925
2,129,496	Hollingsworth	Sept. 6, 1938