July 3, 1951 C. J. STALEGO 2,559,572

METHOD AND APPARATUS FOR PRODUCING GLASS FIBERS

Filed April 30, 1947 2 Sheets-Sheet 1

FIG. 1

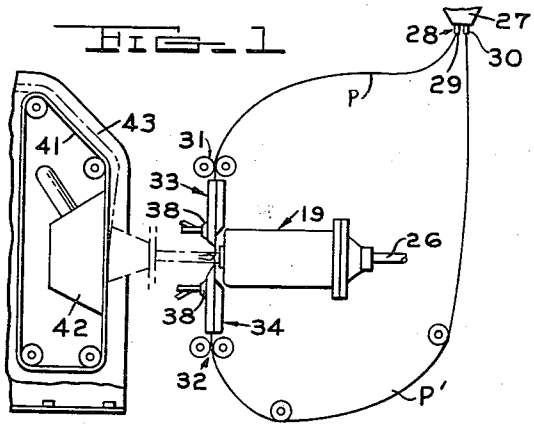

FIG. 2

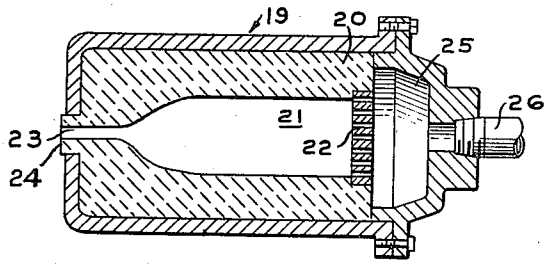

FIG. 3

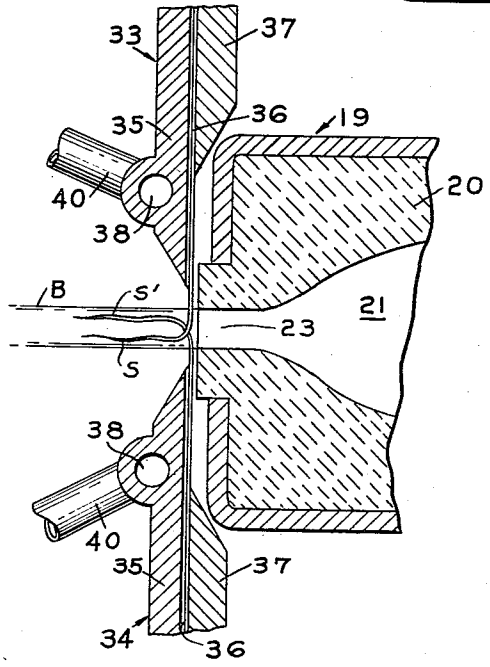

INVENTOR.
CHARLES J. STALEGO
BY
Stachin & Overman
ATTORNEYS

July 3, 1951 C. J. STALEGO 2,559,572

METHOD AND APPARATUS FOR PRODUCING GLASS FIBERS

Filed April 30, 1947

2 Sheets-Sheet 2

FIG. 4

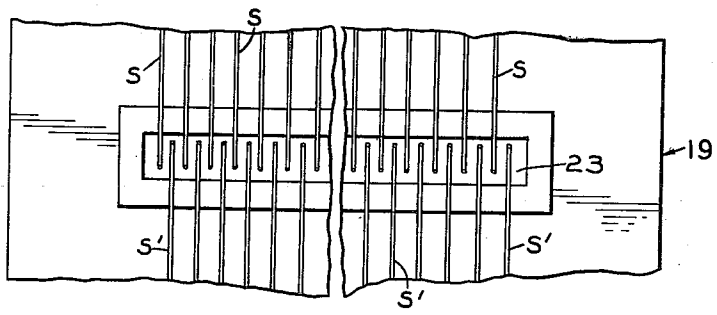

FIG. 6

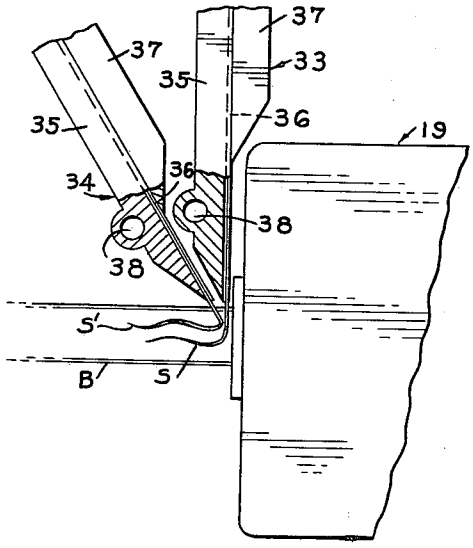

FIG. 5

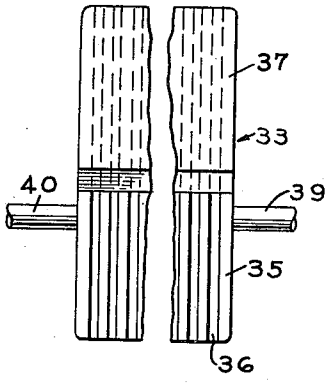

INVENTOR.
CHARLES J. STALEGO
BY
Stachina Overman
ATTORNEYS

Patented July 3, 1951

2,559,572

UNITED STATES PATENT OFFICE

2,559,572

METHOD AND APPARATUS FOR PRODUCING GLASS FIBERS

Charles J. Stalego, Newark, N. J., assignor to Owens-Corning Fiberglas Corporation, a corporation of Delaware

Application April 30, 1947, Serial No. 744,990

16 Claims. (Cl. 49—17)

1

This invention relates generally to a method and apparatus for producing fibers from a vitreous or heat softenable material, such for example, as glass.

Glass fibers have been successfully produced on a commercial basis for feeding elongated rods or filaments of glass into a blast having a temperature sufficient to melt the glass and having a velocity sufficiently high to attenuate the molten glass into fibers as fine as one micron or less in diameter.

The blast is produced by burning a combustible gaseous mixture in a chamber having an outlet opening in one wall through which the products of combustion are discharged into the atmosphere. The area of the outlet opening is restricted, and is ordinarily no greater than is necessary to obtain a blast having a temperature in excess of the melting temperature of the glass to be melted thereby. The blast is discharged from the chamber at a very high velocity, and the kinetic forces available in the blast for a substantial portion of its length are sufficient to draw out the molten glass into fine fibers.

In one adaptation of the above process, the glass filaments or rods are fed into the blast along a path extending transversely of the direction of movement of the blast and the restricted outlet opening in the combustion chamber is usually long in comparison to its depth to produce a blast of sufficient width to enable feeding a substantial number of glass rods or filaments into the blast in side by side relationship. The restricted outlet opening is relatively narrow in order to impart the required velocity to the blast, and as a consequence, the depth or thickness of the blast is correspondingly small and the blast is in effect a wide thin band of very hot gases.

For a given set of conditions the quantity of fibers produced by the above process depends upon the number of filaments or glass rods capable of being simultaneously fed into the blast. It is, therefore, advantageous to feed as many filaments as possible into a blast of given width in order to obtain maximum production of fibers from a single apparatus and from the fuel consumed in creating the blast. In actual practice, it has been found that filaments spaced laterally from each other a distance as small as .020 of an inch may be successfully attenuated by the blast. However, this spacing between the filaments is not considered practical in commercial practice, because of the difficulties in handling the filaments while lacking the usual guide therefor, and because of the difficulty in constructing

2

the various parts of the filament feeding and guiding equipment. In actual production it has been the general practice to provide approximately .080 of an inch clearance between adjacent filaments or rods fed into the blast in order to facilitate handling the filaments and permit the use of economical apparatus.

With the above in view it is one of the objects of this invention to greatly increase the efficiency of the above general type of fiber forming process by substantially increasing the rate of production of fibers from a blast of given size.

Another feature of this invention is to accomplish the above result without the necessity of reducing the lateral spacing between the fibers to an extent which would interfere with the ease of handling of the glass filaments or which would complicate the apparatus required.

A more detailed object of this invention is to greatly increase the rate of production of glass fibers from a single intensely hot high velocity blast by feeding groups of glass rods or filaments into the blast with the filaments in each group spaced laterally from each other transversely of the blast and with the filaments in one group staggered with respect to the filaments in an adjacent group.

A further object of this invention is to guide the filaments in one group into the blast from one side of the blast and to guide the filaments in a second group into the blast from the opposite side of the latter. The guides at opposite sides of the blast are so arranged that the filaments entering the blast from one guide project into the spaces between adjacent filaments entering the opposite side of the blast. Assuming that the filaments in each group are spaced about .080 of an inch from each other for ease of handling, and that one group of filaments is offset laterally to locate the filaments therein midway between adjacent filaments in the other group, it follows that the distance between the advancing ends of the filaments in the blast is approximately .040 of an inch which is well above the .020 of an inch clearance required to prevent destruction the blast to such an extent as to destroy the conformation of the blast. Thus the capacity of a blast of given width may be at least doubled without complicating either the operation or the apparatus.

Still another object of this invention is to arrange the filament guides at opposite sides of the blast, so that the two groups of filaments enter opposite sides of the blast in a common plane extending transversely of the blast and po-

sitioned in close proximity to the outlet opening of the burner. Thus full advantage may be taken of the effective attenuating length of the blast, and the production of long fine fibers is rendered possible.

The foregoing, as well as other objects, will be made more apparent as this description proceeds, especially when considered in connection with the accompanying drawings, wherein:

Figure 1 is a diagrammatic view illustrating one type of apparatus that may be employed for carrying out the various steps of the process;

Figure 2 is a longitudinal sectional view through the burner shown in Figure 1;

Figure 3 is an enlarged fragmentary sectional view of the burner and guide means provided for the primary glass rods or filaments;

Figure 4 is a diagrammatic front elevational view of the burner showing the manner in which the primary filaments are fed into the blast issuing from the burner;

Figure 5 is a rear elevational view of one of the guide members; and

Figure 6 is a diagrammatic elevational view showing a modified form of apparatus.

The process of producing fibers from a vitreous or heat softenable material such as glass may be more fully understood upon considering one type of apparatus for carrying out the various steps of the process. In detail this apparatus comprises a burner 19 having a body 20 of refractory material and having a combustion chamber 21 therein. One end of the combustion chamber terminates at a perforated wall 22 having a plurality of small orifices extending therethrough and the other end of the chamber is provided with a wall 24 having a restricted outlet or discharge passage 23 therein. The refractory body may be surrounded by a sheet metal shell which extends past one end of the body to form an inlet chamber 25 between the end of the shell and the perforated wall 22. A suitable conduit 26 connects with the shell to feed the combustible gaseous mixture into the inlet chamber 25.

The gaseous mixture enters the inlet chamber 25 and passes through the orifices in the wall 22 where it ignites and burns with a resulting high degree of expansion. During operation the walls of the chamber 21 are heated by the burning gas and the hot walls tend to increase the rate at which the gas entering the chamber burns. The resulting high rate of combustion causes a great expansion of the products of combustion which, as they pass through the outlet passage 23, are accelerated into a very high velocity blast of intense heat. The aim is to feed as much gaseous mixture into the chamber 21 as possible without causing the combustion to become unstable or to take place at the outside of the chamber or to cease altogether.

The outlet passage 23 is elongated and is substantially less in cross-sectional area than the chamber 21, so that the products of the combustion taking place within the chamber are accelerated as they pass through the opening or passage 23 to provide a blast B of the gases moving at a very high velocity.

In this connection it may be pointed out that the cross-sectional area of the passage 23 may be varied to some extent relative to the cross-sectional area of the chamber 21, depending upon the heat required in the blast leaving the outlet passage. Passages of greater cross-sectional area relative to the cross-sectional area of the chamber 21 permit burning a greater amount of gas and result in greater heat of the blast, but also cause a decrease in the velocity of the blast. Preferably, however, the cross-sectional area of the outlet passage 23 is no greater than necessary to obtain in the blast the heat required to raise the glass to the attenuating temperature. The best relation of the cross-sectional area of the passage 23 to the cross-sectional area of the chamber 21 may be determined by simple trial, but will be found to be within the range of 1:8 to 1:4. This arrangement provides for obtaining the high velocity of the blast coupled with sufficient heat of the blast to quickly melt the glass to be attenuated.

The type of combustible gas used may be of any suitable kind, but for reasons of economy, it is preferably an ordinary fuel gas, such as natural or manufactured fuel gas. This gas is mixed with the proper amount of air by means of the orthodox air and gas mixers. The gas and air mixture is taken from the mixer at moderate pressure of approximately one to five pounds per square inch, but may be considerably higher if desired, and is led through an ordinary conduit to an enclosed ignition chamber where ignition of the gaseous mixture takes place.

The primary filaments P may be readily produced on a commercial basis by the apparatus diagrammatically shown in Figure 1 of the drawings. In detail the reference character 27 indicates a glass feeder or bushing which may be in the form of a long, relatively narrow trough, having a plurality of feeding orifices 28 in its bottom wall. Glass cullet or glass batch is fed to the bushing in any suitable manner and is heated while in the bushing to a molten condition.

The orifices 28 are divided into two rows 29 and 30, and molten glass flows from the orifices in small streams of glass. The streams flowing from the orifices 29 are attenuated to form primary filaments P by means of coacting feed rolls 31, one or both of which is driven by any suitable means not shown herein. The streams flowing from the row of orifices 30 are attenuated to form primary filaments P' by means of a second pair of feed rolls 32, one or both of which is also driven by power means not shown. The feed rolls 31 and 32 are respectively located above and below the blast B sufficient distances from the bushing 27 to assure cooling of the filaments to solidification before engagement by the feed rolls.

It has been found that the velocity and temperature of the blast B is highest immediately adjacent the outlet opening 23 and decreases in both temperature and velocity as the distance from the orifice increases. Thus in order to take full advantage of the maximum temperature and velocity of the blast B, the primary filaments are fed into the blast as close as practical to the outlet opening 23. In accordance with this invention the primary filaments P are guided into the top side of the blast B by a guide 33, and the primary filaments P' are guided into the bottom side of the blast by a guide 34. The two guides are identical in construction, and are supported in any suitable manner (not shown) with the delivery end portions in close proximity to the outlet opening 23 in the front wall of the burner 19.

Each guide comprises a plate 35 having a plurality of laterally spaced grooves 36 formed in the rear face thereof and extending for the full length of the plate. The plates 35 are respectively supported in any suitable manner at opposite sides of the blast B in a common plane extending substantially perpendicular to the blast

B in positions to enable the respective primary filaments P and P' to be advanced along the grooves 36 in the plates by the feed rolls.

Suitable cover members 37 are respectively secured to the rear faces of the plates 35 over the grooves 36 to thereby enclose the primary filaments passing along these grooves. In the present instance the members 37 merely cover the outer portions of the plates 35, and this construction is advantageous for two reasons. In the first place, it exposes the portions of the filaments passing along the inner ends of the grooves 36 to the adjacent front wall of the burner 19, and in the second place, it enables positioning the plates 35 in close proximity to this wall. As a result the primary filaments are fed into the blast immediately adjacent the outlet opening 23 in the burner 19 in order to take advantage of the full attenuating length of the blast B, and in addition, provides for heating the filaments by any heat radiating from the front wall of the burner. Preheating the filaments as they are fed into the blast B facilitates melting of the advancing ends of the filaments by the blast.

Due to the fact that the inner portions of the guide plates extend in such close proximity to the burner 19, provision may be made for cooling the plates 35 by providing each plate with a jacket 38. A cooling medium from a suitable source is conveyed to the jackets 38 through inlet conduits 39, and is discharged from the jackets through outlet conduits 40.

The grooves 36 in the guide 33 correspond in number to the number of primary filaments P issuing from the row of orifices 29, and these grooves respectively receive the primary filaments P as the latter leave the feed rolls 31. The actual number of primary filaments P introduced into the blast B from the top side of the latter is limited by the width of the blast issuing from the outlet opening 23, and by the lateral spacing between adjacent primary filaments P. The width of the blast is determined by the length of the outlet opening 23 in the burner 19, and this length in turn is limited by the necessity of restricting the area of the outlet opening to obtain a blast having the temperature and velocity required to attenuate the molten glass into fibers. Therefore, in order to take full advantage of the capacity of a burner producing blast of given width, it is desirable to reduce the lateral spacing between the primary filaments to a minimum, so that the maximum number of filaments may be introduced to the blast.

Although it has been found that primary filaments spaced as close as .020 of an inch may be effectively attenuated in the blast without interference or without destroying the conformation of the blast, nevertheless, this relatively close spacing between adjacent primary filaments introduces severe handling and mechanical problems. For example, when producing glass fibers on a commercial basis, it is preferred to space adjacent filaments from each other a distance of approximately .080 of an inch. This spacing enables the glass filaments to be readily laced in the associated guide, and also permits the guide and associated mechanical parts to be inexpensively produced.

It follows from the foregoing that the problem exists of providing sufficient spacing between adjacent primary filaments to enable convenient handling of the filaments with economical equipment, and at the same time, provide for taking advantage of the additional capacity available in

the blast to form fibers. In general this problem is solved by spacing the primary filaments P laterally from each other a distance sufficient to enable the filaments to be readily handled, and by introducing the primary filaments P' into the opposite side of the blast B between the primary filaments P in the manner clearly shown in Figure 4 of the drawings. For the purpose of this description it will be assumed that the primary filaments P and the primary filaments P' are respectively spaced from each other a distance approximately .080 of an inch. Inasmuch as the primary filaments P' are introduced to the blast between adjacent primary filaments P, it follows that practically twice as many primary filaments are fed into the blast, and that the lateral spacing between the filaments in the two groups approximates .040 of an inch, which is well within the range capable of being attenuated in the blast without destroying the conformation of the blast.

In the present instance the above results are obtained by positioning the guide 34 in such relationship to the guide 33 that the grooves 36 in the guide 34 are staggered with respect to the grooves 36 in the guide 33. As indicated in Figure 4 of the drawings, the offset relationship between the two guides is such that the primary filaments P' in the lower group respectively enter the blast midway between the primary filaments P, so that the adjacent ends of the filaments may actually pass one another with sufficient clearance therebetween to avoid interference.

The diameter and/or rate of feed of the primary filaments P into the blast B is predetermined, so that the advancing ends of the filaments P are melted prior to being projected through the bottom of the blast. The molten glass at the advancing ends of the filaments P is carried away in the form of streams S, and the streams are attenuated into fine fibers by the force of the blast. The rate of feed and/or diameter of the glass filaments P' is also predetermined so that the advancing ends of these filaments are melted prior to projecting the filaments through the top of the blast, and the molten glass at the advancing ends of the filaments P' is carried away in the form of streams S'. The streams S' are also attenuated into fine fibers by the force of the blast without interference from the streams S. Thus the capacity of a burner having a given size outlet opening 23 is greatly increased without appreciably increasing the number of parts of the apparatus. The glass fibers formed in the blast B are carried through the atmosphere by the blast and are deposited on a suitable foraminous conveyor 41 that is moved across the path of the blast-borne fibers. A suction chamber 42 is preferably disposed at the rear side of the conveyor 41 and is arranged to extend over the deposition zone of the fibers to enable building up a unitary mat 43.

The embodiment of the invention shown in Figure 6 of the drawings differs from the one described above in that the two groups of filaments are simultaneously fed into the blast B from one side of the latter. The apparatus employed may be identical to the apparatus described at some length above, except for the fact that the guide 34 and associated feed rolls 32 are positioned at the same side of the blast as the guide 33. Also if desired, the guide 34 may be inclined slightly with respect to the guide 33 so that the primary filaments P' may be introduced into the blast in relatively close proximity to the outlet opening 23. The two guides are, of course, positioned so

that the primary filaments in one group are fed into the blast between adjacent primary filaments in the other group, so that the operation is the same as described above.

The very fine fibers made in accordance with the present invention are ideally suited for light weight thermal insulation and as cushioning or padding material and filling for mattresses and pillows. Because of their very high strength, the fibers are also well adapted for reinforcing plastics and metals.

In the reinforcement of metals the fibers may be mixed with powdered metal in amounts of 10 to 50 per cent by weight of the metal. The mixture of powder and fibers is molded to the desired shape under high pressure and the molded article is then sintered in a furnace having a non-oxidizing atmosphere. This method is basically that followed conventionally in powder metallurgy, and the resulting product is similar to the product resulting from powder metallurgy but has markedly increased strength. Reinforcement by the incorporation of glass fibers is most promising in the case of softer or lower melting point metals such as white metal, aluminum, and the like.

I claim:

1. The process of making glass fibers from elongated rods of glass which comprises producing a blast exceeding the melting temperature of the glass rods and moving at a velocity sufficiently high to attenuate molten glass into fibers, and feeding groups of glass rods endwise into the blast from different directions with the rods in each group spaced laterally from each other transversely of the blast and with the rods in adjacent groups offset laterally with respect to each other.

2. The process of making glass fibers from elongated rods of glass which comprises producing an intensely hot high velocity blast, feeding groups of glass rods endwise into the blast from different directions with the rods in each group spaced laterally from each other transversely of the blast and with the rods in adjacent groups staggered to locate the rods in one group midway between the rods of the other group, and attenuating the advancing ends of the rods in both groups to form fibers by the heat and force of the blast.

3. The process of making glass fibers which comprises burning a combustible gaseous mixture in a chamber and discharging the products of combustion through a relatively wide narrow opening in the form of an intensely hot high velocity blast, feeding groups of elongated glass rods into the blast from different directions with the rods in each group spaced laterally from each other transversely of the blast and with the rods in one group offset laterally with respect to the rods in an adjacent group, and attenuating within the blast the advancing ends of the rods in both groups into fibers by the heat and force of the blast.

4. The process of making glass fibers from glass filaments which comprises burning a combustible gaseous mixture in a chamber having a relatively wide narrow opening in one wall through which the products of combustion are discharged in the form of a blast having a temperature sufficiently high to soften the glass filaments and having a velocity sufficiently high to attenuate the softened glass into fibers, feeding groups of glass filaments from different directions into the blast adjacent the outlet opening with the filaments in each group spaced laterally from each other and with the filaments in adjacent groups staggered to position the filaments in one group midway between the filaments in the adjacent group, and attenuating within the blast the advancing ends of the filaments into fibers by the heat and force of the blast.

5. The process of making glass fibers which comprises producing an intensely hot high velocity blast, feeding separate groups of elongated rods of glass into opposite sides of the blast with the rods in each group spaced laterally from each other transversely of the blast and with the rods in the group at one side of the blast offset laterally with respect to the rods in the group at the opposite side of the blast, and attenuating within the blast the advancing ends of the rods into fibers by the heat and force of the blast.

6. The process of making glass fibers from elongated glass rods which comprises burning a combustible gaseous medium in a chamber and discharging the products of combustion into the atmosphere in the form of an intensely hot high velocity blast, feeding separate groups of elongated glass rods in opposite directions into opposite sides of the blast with the rods in each group spaced laterally from each other transversely of the blast and with the rods in the group at one side of the blast offset laterally with respect to the rods in the group at the opposite side of the blast, and attenuating within the blast the advancing ends of the rods in both groups into fibers by the heat and force of the blast.

7. The process of making glass fibers from elongated glass rods which comprises burning a combustible gaseous medium in a chamber and discharging the products of combustion into the atmosphere in the form of an intensely hot high velocity blast, feeding separate groups of elongated glass rods in opposite directions into opposite sides of the blast with the rods in each group spaced laterally from each other transversely of the blast and with the rods of both groups entering the blast in a common plane extending transversely to the blast, and attenuating the rods in both groups into fibers by the heat and force of the blast.

8. The process of making glass fibers from elongated glass rods which comprises burning a combustible gaseous medium in a chamber and discharging the products of combustion into the atmosphere in the form of an intensely hot high velocity blast, feeding separate groups of elongated glass rods in opposite directions into opposite sides of the blast with the rods of both groups entering the blast in a common plane extending transversely to the blast and staggering the rods in one group with respect to the rods in the other group to enable the rods in one group to pass between adjacent rods in the other group, and attenuating the rods in said groups to form fibers by the heat and force of the blast.

9. The process of making glass fibers from elongated rods of glass which comprises producing an intensely hot high velocity blast, feeding separate groups of glass rods endwise from different directions into the blast and from one side of the blast with the rods in each group spaced laterally from each other transversely of the blast and with the rods in one group offset laterally with respect to the rods in an adjacent group, and attenuating the rods in said groups to form fibers by the heat and force of the blast.

10. Apparatus for producing fibers from elon-

gated rods of a heat softenable material, comprising means for producing a relatively wide blast of a gaseous medium having a temperature exceeding the softening temperature of the material and having a velocity sufficient to attenuate the softened material into fibers, means for feeding groups of elongated rods of the material into the blast from different directions, a guide for one group of rods having means for positioning the rods in lateral spaced relation to each other transversely of the blast, and a second guide for another group of rods having means for positioning the rods in the latter group in lateral offset relationship to the rods in the first mentioned group.

11. Apparatus for producing glass fibers from elongated glass rods, comprising a burner having a chamber in which a combustible gaseous mixture is ignited and having a restricted long relatively narrow opening in one wall of the chamber through which the products of combustion are discharged in the form of a relatively wide blast having a temperature sufficient to melt the glass rods and having a velocity sufficiently high to attenuate the molten glass into fibers, means for feeding groups of elongated glass rods into the blast from different directions with the rods in each group spaced laterally from each other transversely of the blast and with the rods in one group offset laterally with respect to the rods in an adjacent group, and guide means engageable with the rods in each group for maintaining the rods in the above relationship as the rods are fed into the blast.

12. Apparatus for producing glass fibers from elongated glass rods, comprising a burner having a chamber in which a combustible gaseous mixture is ignited and having a restricted long relatively narrow opening in one wall of the chamber through which the products of combustion are discharged in the form of a relatively wide blast having a temperature sufficient to melt the glass rods and having a velocity sufficiently high to attenuate the molten glass into fibers, a pair of guides respectively supported at opposite sides of the blast adjacent the burner outlet opening, each guide having a plurality of grooves spaced laterally from each other transversely of the blast and the grooves in one guide being offset laterally with respect to the grooves in the other guide, and means for feeding glass rods along the grooves into opposite sides of the blast.

13. Apparatus for producing glass fibers from elongated glass rods comprising a burner having a chamber in which a combustible gaseous mixture is ignited and having a restricted long relatively narrow opening in one wall of the chamber through which the products of combustion are discharged in the form of a relatively wide blast having a temperature sufficient to melt the glass rods and having a velocity sufficiently high to attenuate the molten glass into fibers, a pair of guides respectively supported at opposite sides of the blast in a common plane

extending transversely of the blast adjacent the burner outlet opening, each guide having a plurality of grooves spaced laterally from each other and the grooves in one guide being staggered with respect to the grooves in the other guide, and means for feeding the glass rods along the grooves into opposite sides of the blast.

14. The process of making glass fibers which comprises burning a combustible mixture of gases within a space so confined with respect to the quantity of gas burned as to produce a rate of expansion of the gases within the space high enough to force the burned gases from the space and through a zone beyond said space in the form of an intensely hot high velocity blast of greater width than thickness, feeding separate groups of rods of glass from opposite directions into opposite sides of the blast in said zone along paths intersecting the direction of movement of the blast with the rods in one group offset with respect to the rods in the other group in a direction crosswise of the direction of movement of the blast, and attenuating the advancing ends of the rods within the blast into fibers by the heat and force of the blast.

15. Apparatus for producing glass fibers from elongated rods of glass, comprising means for producing a relatively wide blast of a gaseous medium having a temperature exceeding the softening temperature of the glass and having a velocity high enough to attenuate the softened glass into fibers, means for feeding groups of glass rods in the direction of their length into opposite sides of the blast along a path extending crosswise of the blast, and guides for the groups of rods having means for positioning the rods in one group in lateral offset relationship to the rods in the other group.

16. Apparatus for producing fibers from rods of heat softenable material including in combination, means for producing a blast of a gaseous medium having a temperature exceeding the softening temperature of the material and of a velocity sufficient to attenuate the softened material into fibers; means for separately feeding a plurality of groups of rods of material into the blast from different directions; guiding means individual to each group of rods having means for spacing the rods of each group in lateral spaced relation, said guiding means being positioned to convey the rods of the groups in staggered relation in a common plane into the blast.

CHARLES J. STALEGO.

REFERENCES CITED

The following references are of record in the file of this patent:

UNITED STATES PATENTS

Number	Name	Date
1,128,175	Morf	Feb. 9, 1915
1,157,984	Herkenrath	Oct. 26, 1915
2,405,036	Hoffman	July 30, 1946
2,450,363	Slayter et al.	Sept. 28, 1948
2,457,777	Holtschulte et al.	Dec. 28, 1948