Jan. 15, 1929. 1,699,504

F. J. LYNCH

SLUG MAGAZINE FOR EXTRUDING MACHINES

Filed March 29, 1928

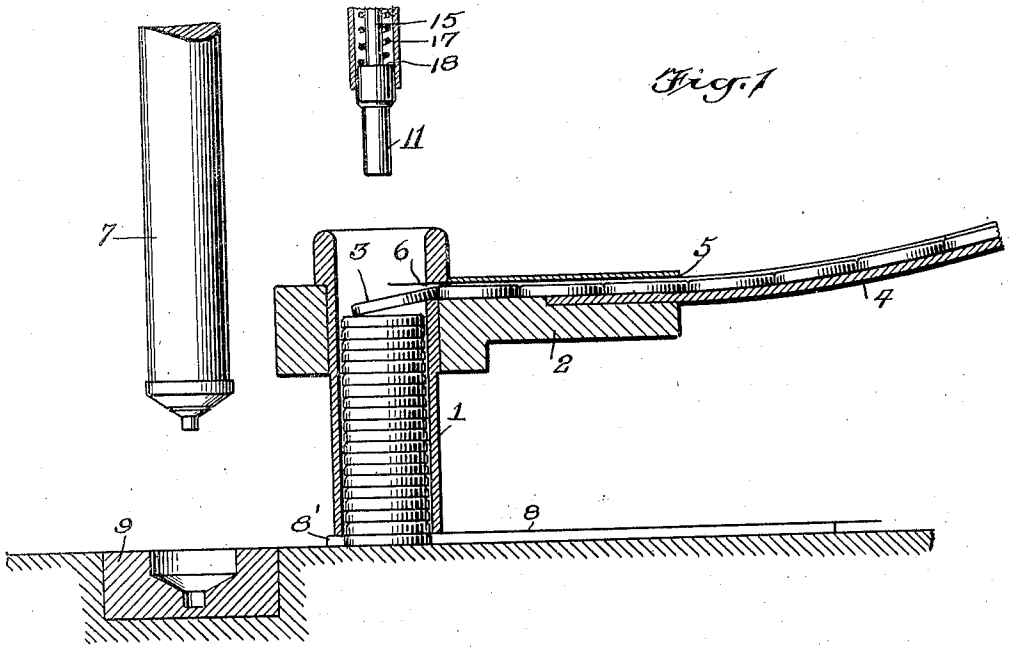

Fig. 1

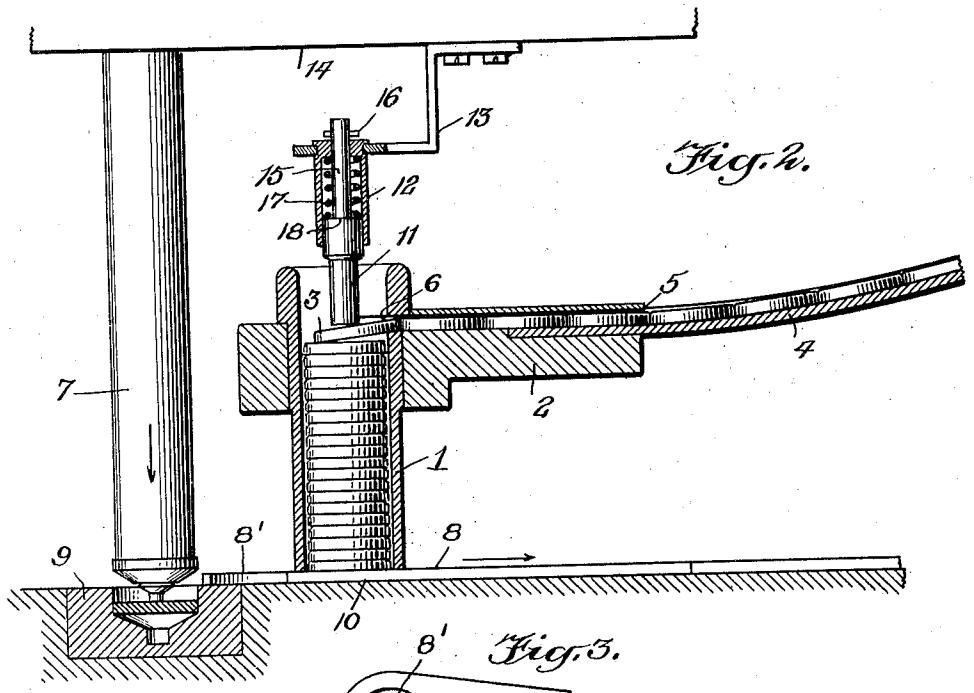

Fig. 2.

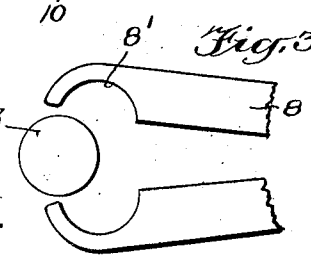

Fig. 3.

WITNESSES

George Taylor

A. L. Hitchin.

INVENTOR

F. J. Lynch

BY Munn & Co.

ATTORNEY

Patented Jan. 15, 1929. 1,699,504

UNITED STATES PATENT OFFICE.

FRANK J. LYNCH, OF HILLSIDE, NEW JERSEY, ASSIGNOR TO THE SUN TUBE CORPORATION, OF HILLSIDE, NEW JERSEY, A CORPORATION OF NEW JERSEY.

SLUG MAGAZINE FOR EXTRUDING MACHINES.

Application filed March 29, 1928. Serial No. 265,686.

This invention relates to magazines for slugs, and particularly to a slug magazine associated with an extruding machine, the object being to provide a construction whereby slugs are accurately positioned to be regularly fed into the extruding machine.

Another object of the invention is to provide a slug magazine wherein the slugs are resiliently clamped in position when not being fed to the extruding machine.

A still further object of the invention is to provide a slug magazine with a resilient clamping pin acting to hold the slugs in proper position for dispensing and at the same time acting as a stop for preventing slugs from entering the magazine in an improper manner.

In the accompanying drawing—

Figure 1 is a longitudinal vertical sectional view thorugh a magazine and associated parts disclosing an embodiment of the invention, the same being shown in connection with part of an extruding machine;

Figure 2 is a view similar to Figure 1 but showing the parts in a different position;

Figure 3 is a fragmentary top plan view of a slug-feeding clamp.

In feeding slugs to extruding machines used in making collapsible tubes, it has been customary heretofore to provide a magazine at a distant point and to cause slugs to move from the magazine into a chute and thence down to a feeding or gripping structure which places the individual slugs correctly in the extruding machine. As the structure was made heretofore a more or less continuous feed of slugs was provided and consequently sometimes the slugs would get out of line or out of place and would not be properly fed to the extruding machine. This would naturally result in stopping of the machine and loss of time in resetting the parts. In the present invention a slug magazine has been provided which causes a proper and accurate feeding of slugs to the extruding machine. As shown in the drawing, 1 indicates the magazine which is supported by any suitable support 2 and which is supplied with slugs 3 from the chute 4. Chute 4 may be fed with slugs from a reserve magazine or in any desired manner. As the slugs move downwardly preferably under the action of gravity they will pass into the passageway 5 and eventually through the slot or cut 6 into the upper part of the magazine 1. The slugs are in a substantially horizontal position when entering the magazine 1. Preferably the magazine is substantially filled as shown in Figure 1 before the extruding machine is started. The extruding machine includes a plunger 7 and a pair of feeding grips 8 which operate in proper time with the plunger 7. The grip 8 is provided with gripping jaws 8′ which separate after depositing a slug in the die 9 and then move back in a separated condition until the jaws are opposite the bottom of the magazine 1. The magazine 1 is supported so that the lower end will be slightly further from the top surface of plate 10 than the thickness of the slug, whereby the jaws 8′ may close on a slug and push the same over to the die 9 with parts of the clamp 8 sliding beneath the magazine. As soon as the clamp 8 has returned until the jaws 8′ are on opposite sides of the magazine, the various slugs in the magazine are permitted to drop downwardly and the lowermost slug will naturally be substantially within the jaws so that, when the clamp 8 closes and moves forwardly again, it will grip the lowermost slug and move the same to the die 9. This action is continued as long as the machine is in operation. As this takes place slugs are moving down a chute 4 and entering the magazine through slot 6. If the topmost slug is in the position shown in Figures 1 and 2 when the plunger 7 moves downwardly, it is held in this position by a pin 11 which presses against the top slug which in turn places the remaining slugs in the magazine under slight pressure. Pin 11 is slidably mounted in the tubular casing 12 held rigidly by the bracket 13, which bracket is secured in any desired manner to the part 14 which moves with plunger 7. The pin 11 is formed with a reduced section 15 extending upwardly through the upper end of casing 12, so that the pin 16 may be inserted. In order to prevent 11 from accidently moving out of casing 12 a spring 17 is arranged in casing 12 and surrounds reduced portion 15 so as to act on the shoulder 18 for resiliently holding the pin in its lowered position. Each time the plunger 7 moves downwardly for producing an extrusion of a slug in die 9, pin 11 will also move downwardly and resiliently tap or press the topmost slug in magazine 1. In this manner the slugs in the magazine are always maintained in a proper position to be grasped by the clamping member 8. Also, by this arrangement of feeding the magazine none of the

slugs can possibly get out of place or cause an improper feeding to the extruding machine.

What I claim is:—

1. A slug magazine for an extruding machine, comprising a tubular member open at both ends, means for supporting the tubular member so as to leave a space therebeneath slightly greater than the thickness of the slug adapted to be placed in the magazine, and means adapted to be moved into the tubular member through the upper open end for correctly positioning slugs in the magazine.

2. A slug magazine for extruding machines, comprising a tubular container, means for directing slugs into said container, said container having an opening at the bottom for the discharge of slugs from the container and a spring-pressed pin carried by the extruding machine movable into and out of the container for resiliently tapping the slugs in the container.

3. A slug magazine for extruding machines, comprising a tubular container, means for supporting said container so that the space beneath the bottom will be slightly more than the thickness of a slug to be carried by the magazine, means for directing slugs into said container at the top thereof, and means carried by the extruding machine movable into and out of the container for resiliently tapping the slugs in the container at spaced intervals.

4. The combination with an extruding machine of a slug magazine arranged adjacent the extruding plunger of the extruding machine, said magazine being supported so that there will be a space therebeneath slightly greater than the thickness of the slug, whereby the feeding clamp of the extruding machine may feed slugs from beneath the magazine, means for directing a supply of slugs to the magazine adjacent the top thereof, said means acting to arrange the slugs in a horizontal plane as they enter the magazine, and means carried by the extruding machine movable into and out of the magazine acting simultaneously with the plunger of the extruding machine for resiliently tapping the pile of slugs in the magazine to prevent the slugs from becoming clogged.

5. The combination with an extruding machine of a slug magazine presenting a vertically disposed tubular container of a size to loosely receive a stack of slugs, means for directing slugs horizontally into said magazine adjacent the top, said magazine being positioned to feed one slug at a time from the bottom, and spring cushioned means moving into and out of the magazine actuated by the extruding machine for tapping the stack of slugs in the magazine.

6. A slug magazine for an extruding machine, comprising a vertically disposed tubular member having a slot near the top, means for supporting the tubular member so as to leave a space therebeneath slightly greater than the thickness of a slug, a chute for directing slugs horizontally through said slots into said tubular member, and means moving into and out of the magazine actuated by the extruding machine for causing said slugs to be properly positioned in the tubular member so as to pass from the tubular member in a horizontal position.

Signed at Hillside in the county of Union and State of New Jersey, this 21st day of March, A. D. 1928.

FRANK J. LYNCH.