Feb. 20, 1968 E. E. HAGGARD, JR 3,369,565

MULTIPORT VALVES

Filed Feb. 3, 1966 2 Sheets-Sheet 1

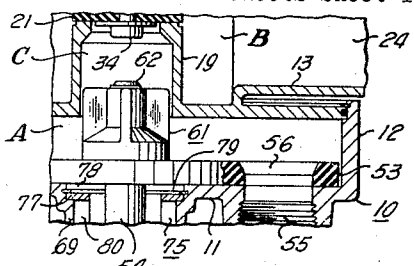

FIG. 7

FIG. 1

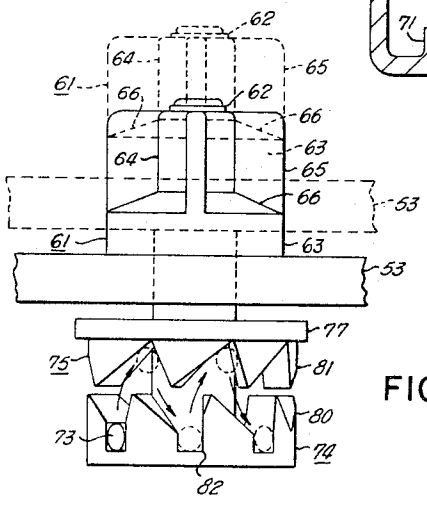

FIG. 2

INVENTOR
Eliot E. Haggard, Jr.

BY Ishley & Ishley

ATTORNEYS

Feb. 20, 1968 E. E. HAGGARD, JR 3,369,565

MULTIPORT VALVES

Filed Feb. 3, 1966 2 Sheets-Sheet 2

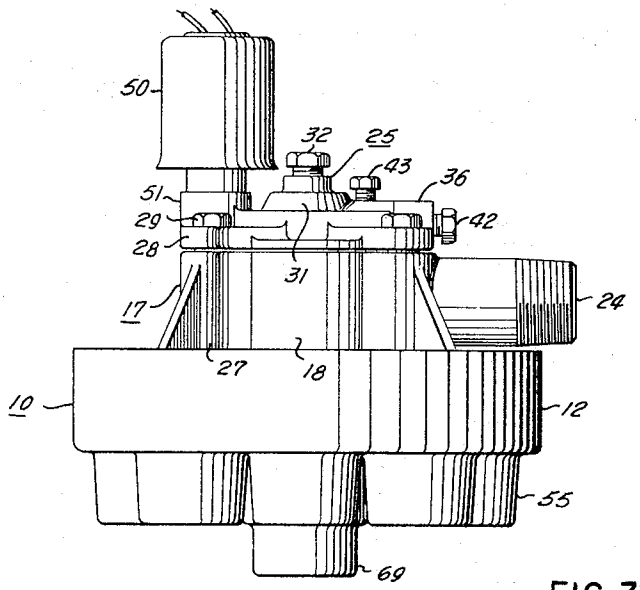

FIG. 3

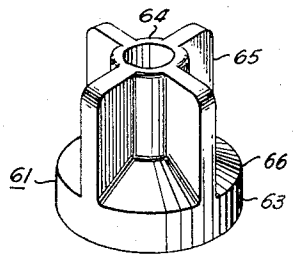

FIG. 6

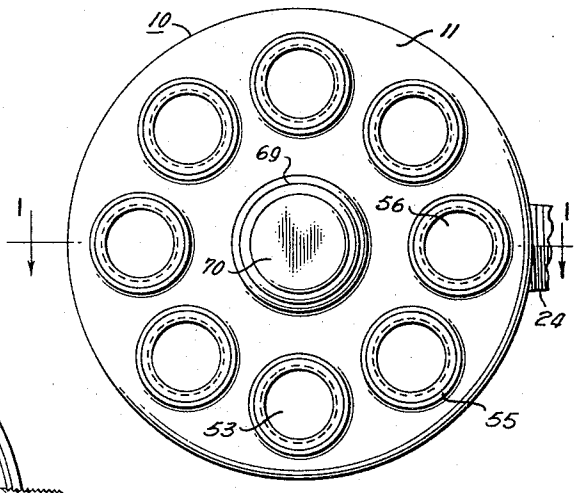

FIG. 4

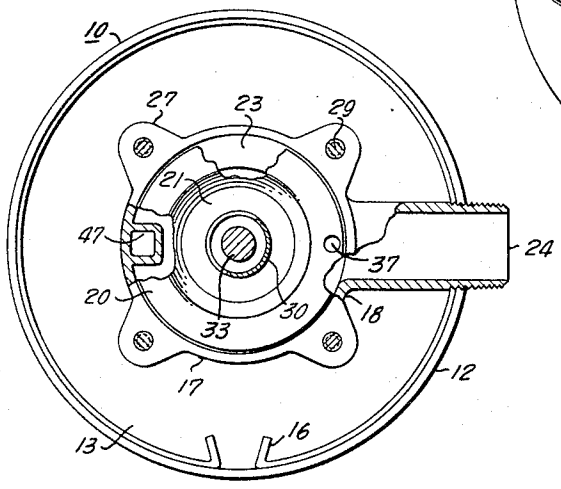

FIG. 5

INVENTOR
Eliot E. Haggard, Jr.

BY Ishley & Ishley

ATTORNEYS

United States Patent Office 3,369,565 Patented Feb. 20, 1968

3,369,565

MULTIPORT VALVES

Eliot E. Haggard, Jr., Duncanville, Tex., assignor to Telsco Industries, Dallas, Tex., a corporation of Texas

Filed Feb. 3, 1966, Ser. No. 524,686
10 Claims. (Cl. 137—625.11)

This invention relates to new and useful improvements in multiport valves.

The novel multiport valve of this invention is adapted to distribute or supply water or other liquid under pressure to a plurality of conductors and is capable of being used in distributing substantially any liquid in irrigation systems, industrial process machinery, chemical replenishment, fountain displays, plating processes, heat treating fluid controls, lawn sprinklers and many other and varied applications. As is well-known, multiport valves eliminate the necessity of a separate control valve for each conductor and the expense of providing operating means for each control valve. This multiport valve is arranged to automatically distribute or supply liquid to a plurality of conductors in sequence by means of reciprocable and rotatable valve means which is adapted to undergo intermittently progressive or step-by-step rotation upon reciprocation in the usual manner.

The novelty of the present invention resides in the means for imparting reciprocal movement to the valve means which is in the form of a member having an opening for sequential or successive registration with a plurality of outlets upon intermittently progressive or step-by-step rotation of the valve member. An inlet or supply chamber is provided for receiving water or other liquid from a suitable source and surrounds an axial chamber or flow passage which is adapted to communicate therewith and conduct the liquid to an outlet chamber having the member mounted therein for reciprocable and rotatable movement. The multiport valve has pressure responsive means for controlling communication of the inlet chamber with the flow passage, and, preferably, is actuated at least in part by the pressure of the liquid admitted to said inlet chamber. Spring or other means may be provided for resisting actuation of the pressure responsive means. One side of the pressure responsive means is exposed to the inlet chamber and its opposite side to a pressure chamber which communicates with the inlet chamber for receiving liquid therefrom and which is adapted to be placed in and out of communication with the outlet chamber whereby the liquid may be discharged from the pressure chamber to relieve the pressure therein and permit actuation of said pressure responsive means by the pressure of the liquid in said inlet chamber. Since the axial chamber or flow passage is disposed within the inlet chember, the area of the latter is reduced whereby minimum pressure or force is required to resist actuation of the pressure responsive means and the latter means is positively held in closed as distinguished from open or communication permitting position.

Another novel feature of the invention resides in the specific construction of the valve member and its actuating piston which is adapted to engage in the flow passage and function as a guide as well as means for actuating the valve member.

A construction designed to carry out the invention will be hereinafter described, together with other features of the invention.

The invention will be more readily understood from a reading of the following specification and by reference to the accompanying drawings, wherein an example of the invention is shown, and wherein:

FIG. 1 is an enlarged, transverse, vertical, sectional

view, taken on the line 1—1 of FIG. 4 and partly in elevation, of a multiport valve constructed in accordance with the invention, the valve disk being turned to show its opening alinement with one of the outlets,

FIG. 2 is a fragmentary, schematic view showing the lower end upper portions of the valve rotating means in full and broken lines,

FIG. 3 is a side elevational view of the valve,

FIG. 4 is a bottom plan view of the valve,

FIG. 5 is a horizontal, cross-sectional view taken on the line 5—5 of FIG. 1.

FIG. 6 is a perspective view of the piston for actuating the valve and

FIG. 7 is a fragmentary, vertical, sectional view, partly in elevation of a portion of the valve disk in its lower or sealing position.

In the drawings, particularly FIGS. 1 and 3, the numeral 10 designates the circular or cup-shaped body or housing of a multiport valve having a flat, bottom wall 11 and an annular side wall 12. An annular, flat partition or plate 13, having a peripheral O-ring or other packing ring 14, closes the top of the body 10 and is confined within an annular, stepped recess 15 at the upper end of the side wall 12 by an annular, overlying retainer or snap ring 16 (FIG. 5) to provide a circular outlet or lower valve chamber A in said body. The plate 13 has an intermediate, substantially circular body section or housing extension 17, of reduced diameter, upstanding therefrom and having an annular, external side wall 18 (FIG. 3) to form an inlet or middle valve chamber B overlying the outlet chamber A. An annular, internal partition or wall 19 upstands from the generally axial portion of the plate in concentric, relative widely spaced relation to the upstanding side wall 19 whereby the inlet chamber B is annular, the internal partition providing an axial, cylindrical valve chamber or interior flow passage C which has its bottom or lower end opening into the top or upper end of the chamber A.

A circular, flexible diaphragm 20 overlies and closes the top or upper end of the inlet chamber B (FIG. 5) and has an axial portion 21, of much greater thickness and consequent rigidity, complementary to and closing the top or upper end of the passage C. The internal partition 19 of the body section 17 has an upwardly-facing, radial seat 22 projecting inwardly of its top or upper end for sealing engagement by the axial, thickened portion 21 of the diaphragm 20, and the peripheral portion of said diaphragm is adapted to rest on an internal, radial flange or shelf 23 formed on the external side wall of said body section. An inlet 24 projects laterally outward from the side wall 18 for connection with a source (not shown) of water or other liquid under pressure to supply the inlet chamber B. As will be apparent, water or other liquid entering the inlet 24 is adapted to flow from the chamber B through the passage C to the chamber A when the diaphragm is flexed upwardly out of engagement with the seat 22.

A relatively shallow bonnet or top body portion 25 overlies the intermediate body section 17 and diaphragm 20 and its interior forms an upper valve or pressure chamber D in coaction with said diaphragm (FIG. 1). The lower margin of the bonnet 25 is provided with an internal, radial flange 26 complementary to and overlying the flange 23 of the side wall 18 for clamping the peripheral portion of the diaphragm therebetween. External upstanding bosses 27 extend axially of the latter side wall for overlying engagement by complementary ears or lugs 28, which project radially from the bonnet, and connection thereto by suitable bolts 29 (FIGS. 3 and 5).

For maintaining the diaphragm 20 engaged with the seat 22, a helical spring 30 is confined within the pres-

sure chamber D in overlying relation to the axial portion **21** of said diaphragm by an axial, upset portion **31** of the bonnet **25** which receives the upper end of said spring and which may have an upstanding plug **32** screwthreaded therein for access to said chamber. The lower end of the spring **30** is centered by a short, cylindrical element or pin **33**, of comparatively large diameter, having an enlarged or button-like lower end **34** extending coaxially through and secured to the diaphragm. If desired, a metallic disk or plate **35** may be confined on the lower end **34** of the element **33** in underlying relation to the diaphragm **20** for reinforcing its axial portion. It is noted that the diaphragm controls communication between the inlet chamber B and axial passage C and that water or other liquid admitted by the inlet **24** may flow into said passage upon flexing of said diaphragm upwardly away from the annular seat of the internal partition **19**.

As shown by the numeral **36**, a portion of the internal, radial flange **26** of the bonnet **25** is of amplified thickness and may be coextensive axially with said bonnet to accommodate an upright aperture **37** which extends upwardly from the inlet chamber B through the diaphragm **20** (FIG. 1). The flange portion **36** has a radial opening **38** intersecting the upper end of the aperture **37** and a minute, coaxial orifice **39**, of greatly reduced diameter, establishes communication between the pressure chamber D and the inner end of the radial opening. A screen or strainer **40** is held in overlying relation to the orifice **39** by a helical spring **41** in the radial opening **38** and a screwthreaded follower **42**. Due to the upright aperture, radial opening and orifice **39**, a passage between the inlet and pressure chambers is provided whereby the pressure of any liquid in said inlet chamber is exerted against the upper surface of the diaphragm for coacting with the force of the spring **30** to hold said diaphragm in engagement with the annular seat **22** of the axial chamber or passage C. If desired, a bleed plug or fitting **43** may be screwthreaded in the top of the bonnet between the plug **32** and orifice.

Opposite the thickened flange portion **36** and its orifice **39**, alined, upright openings **44** and **45** are formed in the flanges **23** and **26**, respectively, and a flanged orifice fitting **46** is screwthreaded in the opening **45** so as to project downwardly through the opening **44**. The flange **23** has an upright duct **47** depending therefrom through the top plate **13** so as to establish communication between the fitting **46** and outlet chamber A. The orifice fitting **46** has a coextensive bore **48** of greater diameter than the orifice **39** and an O-ring or other suitable annular seat **49** recessed in its upper end in surrounding relation to its bore. A solenoid valve **50** has its lower end screwthreaded in an annular boss or collar **51** upstanding from the top of the bonnet **25** and is provided with a depending valve element **52** for engagement with the seat **49** to prevent flow from the pressure chamber D to the outlet chamber A.

The latter chamber has a complementary valve disk or plate **53**, of suitable flexible material, reciprocably and rotatably mounted therein by an axial, cylindrical rod or stem **54** for controlling flow from said chamber to a plurality of outlets **55** which depend in a circle from the bottom wall **11** of the valve body **10** concentrically by the axis of said body so as to be equidistant of said axis for communicating with conductors (not shown). Although the outlets **55** are shown as being spaced equally apart in FIG. 4, it is noted that this arrangement is not critical and is subject to variation. At least one circular opening **56** is formed in the valve disk **53** and is substantially complementary to the outlets for sequential or successive registration therewith upon rotation of said disk (FIG. 1). An external radial shoulder **57** is formed on the medial portion of the stem **54**, such as by reducing the diameter of its upper portion for supporting the valve disk and an annular, underlying reinforcing plate **58**

which has an upstanding axial collar **59** for clamping engagement by an overlying nut **60**.

The reduced upper portion of the valve stem has a cylindrical piston **61** confined thereon in overlying relation to the valve disk **53** by an annular retainer or ring **62**, the lower portion of the piston being internally recessed to accommodate the nut **60**. As shown most clearly in FIG. 6, the piston **61** has an annular, relatively shallow base or lower portion **63** and an elongated upper portion **64** of reduced diameter. A plurality of flat, radial, guide vanes or wings **65** are coextensive with the upper reduced portion **64** of the piston which is of a diameter sufficiently less than the diameter of the axial passage C to permit free reciprocation of said piston and the flow thereabout of liquid through the axial passage. Preferably, the base portion **63** of the piston **61** between the guide wings **65** has an outwardly and downwardly inclined upper surface **66**.

An elongated, cylindrical bore **67** extends coaxially of the lower portion of the valve stem **54** for telescoping engagement by a complementary rod or shaft **68**, which may project upwardly through the bottom wall **11** of the valve body **10**, so as to slidably support the valve disk **53** for reciprocation axially of the outlet chamber A. The bottom wall has an elongated, coaxial, hollow extension or projection **69**, of reduced diameter, depending below the outlets **55** (FIGS. 1 and 3) and formed with a bottom wall **70** in which the lower end of the shaft **68** is suitably seated, such as by an upstanding coaxial boss **71**. A helical spring **72** is confined on the shaft between the boss **71** and the lower end of the valve stem for constantly urging said stem as well as the valve disk upwardly.

The valve stem **54** has a pair of diametrically-opposed cam followers or pins **73** projecting radially from its lower end for alternate engagement with lower and upper, annular cams **74** and **75** upon reciprocation of said stem with the valve disk **53** whereby said disk undergoes intermittently progressive or step-by-step rotation (FIGS. 1 and 2). An internal, radial shoulder **76** is formed in the intermediate portion of the hollow extension **69** of the bottom wall **11** for supporting the lower cam **74** above the boss **71**, while the upper cam **75** has an integral, external, radial flange **77** at its upper margin adapted to seat in an annular, stepped recess **78** at the upper end of said wall extension and be secured against displacement by an annular, overlying retainer or snap ring **79**. The cams are more or less conventional and have the usual rings of angular lobes or teeth **80** and **81**, respectively, extending toward and in close proximity to each other in offset or staggered relationship for contact by the opposed cam followers **73**.

As shown in FIG. 2, recesses or sumps **82** are provided between the teeth **80** of the lower cam **74** to receive the cam followers and hold the valve disk **53** against rotation in its lower position. Manifestly, the angularity and number of cam lobes or teeth are dependent upon the quantity and spacing of the outlets **55** of the valve and are adapted to impart a predetermined amount of rotation to the valve disk upon each full or up and down reciprocation thereof. If desired, a roller **83** may be carried by the outer end of each cam follower **73** to minimize frictional binding thereof on the surfaces of the cam lobes or teeth **80** and **81**, and radial collars **84** may be provided on the valve stem for supporting the medial portions of the followers. It is pointed out FIG. 1 is illustrative only and is technically incorrect in that the opening **56** of the valve disk **53** is offset relative to or disposed between the outlets **55** in the upper position of said disk.

In operation, water or other liquid is adapted to enter the inlet chamber B through the inlet **24** and flows into the pressure chamber D through the passage formed by the aperture **37**, opening **38** and orifice **39** whereby the pressure of the water or other liquid coacts with the force of the spring **30** to hold the axial portion **21** of the dia-

phragm 20 in engagement with the seat 22 and prevent flow from said inlet chamber into the axial passage C. Due to the spring 72 bearing against the lower end of the valve stem 54, the valve disk 53 is held in its upper or raised position adjacent the top plate 13 of the valve body 10 with the upper end of the piston 61 adjacent the diaphragm and with the cam followers 73 engaged with the upper cam 75.

Upon energization of the solenoid valve 50, its valve element 52 is reciprocated upwardly out of engagement with the seat 49 of the orifice fitting 46 to open its bore 48 and permit the flow of liquid from the pressure chamber to the duct 47 and then to the outlet chamber A. Although the valve disk 53 is of less diameter than the outlet chamber so as to permit flow therearound, the volume of this flow is negligible due to the large area of said valve disk and the relative weakness of the spring 72 which permits the pressure of the liquid entering said outlet chamber to immediately force said disk downwardly into positive sealing contact with the bottom wall 11 of the valve body 10 so as to close all of the outlets 55 except the one in registration with the opening 56 of said disk (FIG. 7).

Primarily, the liquid is adpted to enter the outlet chamber A through the axial passage C due to upward flexing of the diaphragm 20 upon relieving of the pressure in the chamber D by liquid escaping from said chamber through the orifice fitting 46 and duct 47 since the bore 48 of said fitting is of greater diameter than the orifice 39 which constantly admits liquid to said pressure chamber. Consequently, it is only necessary for the pressure of the liquid in the inlet chamber B to overcome the force of the spring 30. It is noted that an appreciable area or the annular portion of the underside of the diaphragm 20 between its peripheral portion, which is frictionally clamped between the annular flanges 23 and 26, and its axial portion 21 is exposed to the inlet pressure and that substantially the entire area of said diaphragm underside is exposed to said pressure as soon as said axial portion is partially unseated whereby said diaphragm is flexed upwardly to fully opened position.

The liquid in the inlet chamber also enters the axial passage C and its pressure is exerted against the topside of the piston 61 as well as the flat, large, upper surface of the valve disk 53 due to the loose fit of said piston in the axial passage. In addition to guiding the piston, the vanes 65 facilitate the flow of liquid around said piston or through the inlet passage between the inlet and outlet chambers and, particularly, when the valve disk moves downwardly so as to dispose the base portion 63 of said piston below said passage (FIG. 7). Since the valve stem 54 is movable with the valve disk 53, the cam followers 73 move downwardly into engagement with the recesses 82 of the lower cam 74 to impart partial rotation to said valve disk for alining its opening 56 with one of the outlets 55 (FIG. 2).

Upon deenergization of the solenoid valve 50, its valve element 52 is reengaged with the seat 49 of the orifice fitting 46 to prevent flow through the bore 48 of said fitting and thereby trap the admitted liquid in the pressure chamber D. Since the compressed spring 30 bears against its topside, the diaphragm 20 is reseated as soon as the pressure of the liquid in the pressure chamber is substantially equal to or approaches the pressure of the fluid in the inlet chamber B. Upon seating of the valve element 52, the application of pressure to the outlet chamber A ceases so as to permit the force of compressed spring 72 to lift the valve stem 54 and valve disk 53 and disengage the cam followers 73 from the lower cam 74 and reengage said followers with the upper cam 75 so as to impart further partial rotation to the valve disk.

Due to the force of the spring 30 and the greater pressurized area of the topside of the seated diaphragm, upward flexing and unseating of said diaphragm is prevented until the pressure in the chamber D is relieved. It is noted that the solenoid valve is adapted to be actuated from a remote point and that any other suitable type of valve may be employed for controlling the operation of the multiport valve of this invention. Also, it should be readily apparent that the illustrated upright or vertical position of the valve is not critical since it is operated by fluid pressure and spring force and is not dependent upon gravity.

The foregoing description of the invention is explanatory thereof and various changes in the size, shape and materials, as well as in the details of the illustrated construction may be made, within the scope of the appended claims, without departing from the spirit of the invention.

What I claim and desire to secure by Letters Patent is:

1. A multiport valve including a body having an inlet chamber surrounding an axial chamber and an outlet chamber underlying the inlet and axial chambers and communicating with said inlet chamber through the axial chamber and a pressure chamber overlying said inlet and axial chambers, an inlet communicating with said inlet chamber for supplying liquid under pressure thereto, a plurality of outlets communicating with the outlet chamber and arranged in a circle so as to be equidistant from a common axis, pressure responsive means separating the pressure chamber from said underlying inlet and axial chambers and for closing the upper end of said axial chamber so as to control flow from said inlet chamber to said outlet chamber, a valve member reciprocably and rotatably mounted in the outlet chamber and having at least one opening for successive registration with one of the outlets, the valve member being independent of the pressure responsive means so as to be reciprocable and rotatable relative thereto and being adapted to overlie and close the other outlets when the opening of said member is in registration with one of said outlets, means for turning said valve member upon reciprocation thereof so as to rotate its opening out of registration with one of said outlets and into registration with another of said outlets, means for urging said valve member away from said outlets, means for admitting liquid under pressure to said pressure chamber for holding said pressure responsive means in closing relation to said upper end of said axial chamber to prevent flow from said inlet chamber to said outlet chamber, means for relieving the pressure in said pressure chamber to permit the pressure in said inlet chamber to move said pressure responsive means out of closing relation to said axial chamber upper end, and means for admitting liquid under pressure to said outlet chamber above said valve member for reciprocating said member toward said outlets.

2. A multiport valve as set forth in claim 1 wherein the means for relieving the pressure in the pressure chamber includes a passage establishing communication between the outlet and pressure chambers for conducting liquid from said pressure chamber to said outlet chamber and valve means for controlling flow through the passage.

3. A multiport valve as set forth in claim 1 wherein the means for admitting liquid to the pressure chamber includes a passage establishing communication between the inlet and pressure chambers.

4. A multiport valve as set forth in claim 1 including means for resisting movement of the pressure responsive means out of closing relation to the upper end of the axial chamber.

5. A multiport valve as set forth in claim 1 including guide means having connection with the valve member for reciprocation therewith and upstanding therefrom so as to be reciprocal in the axial chamber.

6. A multiport valve as set forth in claim 5 wherein the guide means includes a piston having a loose fit in the axial chamber to permit flow therearound upon movement of said pressure responsive means out of closing relation to the upper end of said axial chamber.

7. A multiport valve as set forth in claim 5 including

guide means below and having connection with the valve member for coacting with the upstanding guide means.

8. A multiport valve as set forth in claim 7 wherein the turning means is disposed below the valve member and has coacting connection with the guide means below said valve member.

9. A multiport valve as set forth in claim 1 wherein the pressure responsive means includes a spring pressed diaphragm and wherein the upper end of the axial chamber has an annular seat for sealing engagement by said pressure responsive means.

10. A multiport valve as set forth in claim 1 wherein the means for relieving the pressure in the pressure chamber and the means for admitting liquid under pressure to

the outlet chamber include a passage establishing communication between said chambers for conducting liquid from said pressure chamber to said outlet chamber and valve means for controlling flow through the passage.

References Cited

UNITED STATES PATENTS

2,611,392	9/1952	Johnson	137—625.46
2,825,363	3/1958	Bird	137—625.46 X
2,833,309	5/1958	Bird	137—625.46
2,870,788	1/1959	Hull	137—625.46 X

ALAN COHAN, *Primary Examiner.*