Dec. 6, 1938. H. G. LINKE 2,139,089

VIBRATING SCREEN

Filed Aug. 28, 1936

Fig.1

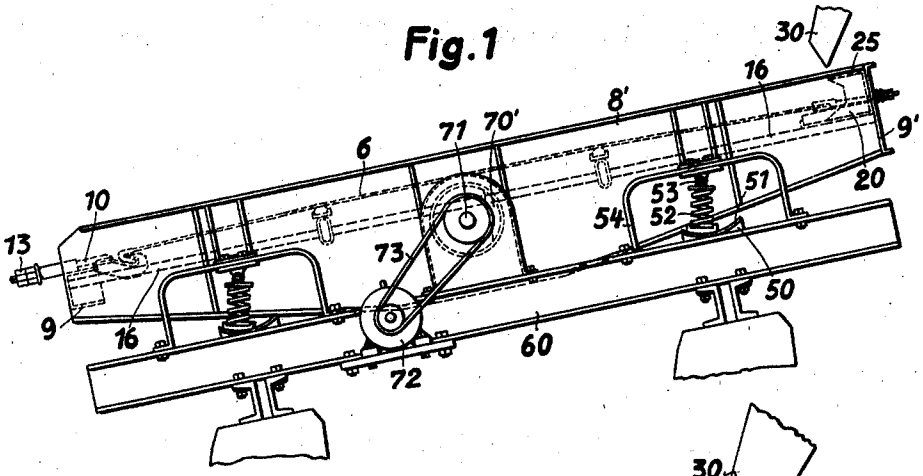

Fig.2

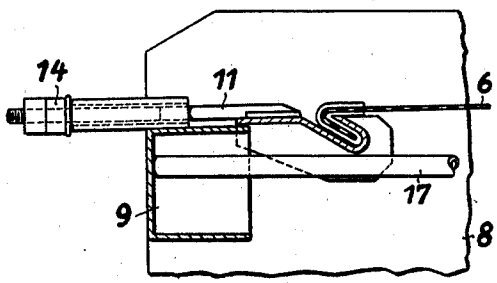

Fig.3

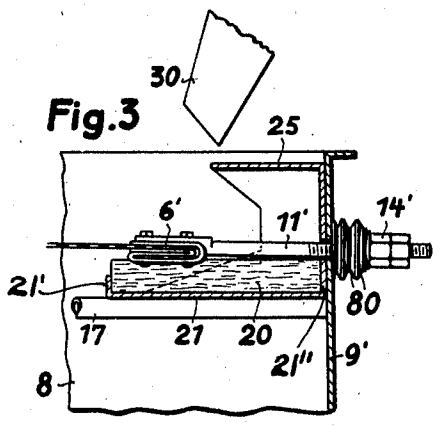

Fig. 4

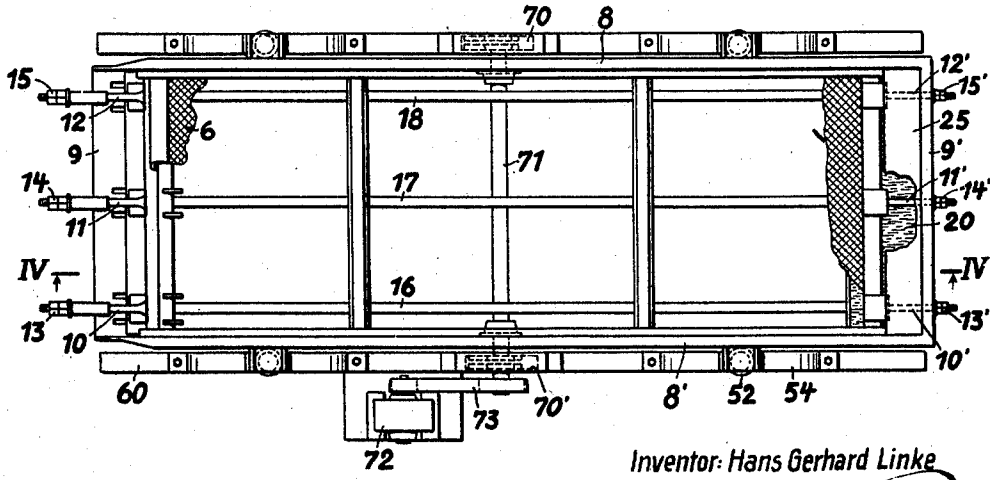

Inventor: Hans Gerhard Linke

by Karl Viertel

Attorney

Patented Dec. 6, 1938 2,139,089

UNITED STATES PATENT OFFICE

2,139,089

VIBRATING SCREEN

Hans Gerhard Linke, Magdeburg, Germany, assignor to firm Fried. Krupp Grusonwerk Aktiengesellschaft, Magdeburg-Buckau, Germany

Application August 28, 1936, Serial No. 98,358

1 Claim. (Cl. 209—403)

My invention relates to so-called vibrating screens, viz. power operated flat sifters or sieves of the inclined type, which are rapidly oscillated in a circular path of movement extending in a substantially vertical plane of symmetry; and more especially to structural improvements in heavy duty screens of the type set forth, which are moved at an unusually high frequency ranging about 2,000, 2,200 and more oscillations per minute.

With heavy duty screens known in the trade and working under such highly strained conditions the screen or sieve member proper is usually subjected to very rapid and premature wear, more especially at the feed end, which is constantly exposed to the heavy impacts by the material directly dropping thereon, and where in addition thereto minute oscillating motions and vibrations of the screen proper relatively to its supporting frame cause destructive, frictional contact and increased wear.

The principal object of this invention is to overcome the said drawbacks by providing an improved vibrating screen of high efficiency, relatively light weight and wear resisting construction, which can be operated at considerably lower costs than heretofore both as regards the replacement of worn out screens and the consumpton of power.

To wit: In the course of the inventor's experiments, directed to suppress those minute yet highly destructive oscillating motions and vibrations of the screen relatively to its supporting frame, it has been found, that it is most advantageous to provide powerful means for yieldingly putting the screen proper under still higher tension than generally applied thereto heretofore.

An important feature of the invention consists in the provision of improved tensioning means having resilient washers of conical cross sectional shape, which are assembled in pairs and in opposed position to each other, and by which the conventional helical springs for yieldingly tensioning the screen member are replaced.

Another equally important feature of the invention consists therein, that the frame structure supporting the screen is provided with bracing means of relatively light weight and in specific arrangement so as to withstand the higher tensioning of the screen, the ultimate object being to avoid the provision of a more costly and cumbersome frame, heavier in proportion to the higher stresses imparted thereto.

The invention further aims at facilitating and expediting the work connected with the exchanging of the screen structure proper, hereinafter called screen cloth, for another one of coarser or finer meshing and at incidentally re-sealing in a permanent and wear resisting manner the gap usually formed at the feed end of the screen cloth, where the latter is secured to the frame of the screen, the objects being to prevent larger pieces of the material, to drop therethrough, and to obtain a more uniformly classified material, which is free from oversize pieces.

Other special features of the invention consist in the provision of a roof member for protecting the feed end of the screen cloth against premature destruction by the impact of material under treatment dropping thereon, and of a bracket plate for securing a layer of packing material in its position at the feed end of the screen cloth, and in joining said roof member and bracket plate together so as to present an additional stiffening member.

Still other objects of the invention and advantages obtained are referred to in detail hereinafter.

The nature and scope of this invention are briefly outlined in the appended claim and will be more fully understood from the following specification taken together with the accompanying drawing, in which

Fig. 1 is a side elevation of a heavy duty screen, designed according to this invention and shown by way of an example;

Figs. 2 and 3 are fragmentary cross sections drawn in a larger scale and taken on line IV—IV in Fig. 4;

Fig. 4 is a plan.

The vibrating screen shown and exhibiting the salient features of this invention comprises:

(1) A screen cloth 6 woven for instance from high-grade stainless steel wire and preferably made particularly strong in the longitudinal direction of pull, in order that it can be subjected to a considerable tension, without suffering distortion,

(2) An open box frame comprising two side beams 8, 8' and two cross beams 9, 9' for supporting said screen cloth 6,

(3) A plurality of screw bolts symmetrically arranged in pairs 10—10', 11—11', 12—12' and nuts 13—13', 14—14', 15—15', threaded thereon and connecting said cross beams 9, 9' with the upper and lower end of said screen cloth 6 so as to stretch the latter tight;

(4) Reinforcing struts 16, 17, 18, which cooperatively connect the opposed faces of said cross beams 9, 9' and register as to their disposition and

distance from each other with the corresponding screw bolts 10—10', 11—11', 12—12', said struts, preferably made in the form of tubes or equivalent compression members of relatively light weight, are provided according to this invention with the object of taking up or reducing to a large degree those heavy bending stresses, which would be otherwise imparted to said cross and side beams by the pull of said screw bolts; in consequence thereof the said beams—and more particularly the longer side beams 8—8'—can be designed considerably lighter in weight;

(5) Packing means, which are provided at the feed end of the screen cloth for covering up the gap between the latter and the opposed cross beam 9'; and which comprise a layer 20 of relatively soft and yielding material, such as felt or India rubber, engaging the feed end 6' of the screen cloth from underneath, and a bracket plate 21 having upturned edges 21', 21'' for supporting and safely retaining in its place said layer of soft material.

The provision of an intermediary layer 20 of relatively soft material described, as packing or sealing element, which can be easily replaced, ensures a tight seal at the feed end of the screen cloth under all conditions, namely under varying tension, to which exchangeable screen cloths chosen for particular screening operations may be subjected, and which may substantially differ in their actual length on being stretched tight.

The inventor's experiments have also shown, that because of the provision of an intermediary layer of soft material no destructive frictional contact and no rattling noise will occur at the feed end of the screen cloth, where the latter engages said packing element, and that the life of the screen cloth is thus considerably lengthened, when compared with vibrating screens of known design, where there is no such packing element provided.

(6) A roof plate 25 so designed and arranged above the feed end of the screen cloth and with regard to said packing member 20 and the feeding hopper 30, that the extreme end 6' of the screen cloth and its packing member 20 underneath are in a sheltered position, viz. safeguarded against being prematurely abraded and worn out by the impacts of the material in transit dropping on the screen; said roof plate 25 may be structurally united to advantage with said bracket plate 21, as seen best in Fig. 3, so as to present at the same time an additional bracing member strengthening the open box frame.

(7) Four flexible supports for resiliently supporting the screen structure; each of said supports comprises:

A base plate 50 carried by channel irons 60 and having a concave upper face 51, a helical spring 52 adjustably fixed by means of a pin and slot gear (not shown) on said base plate, and an archway spring 54 resting on said channel irons 60; the helical springs 52 are hinged to the archway springs 54 at 53 and are designed to carry substantially the whole weight of the screen, while the springs 54 are practically in unloaded condition and are so designed as to their buoyancy and resiliency that the screen will be oscillated in strictly circular or elliptical paths of movement having no bulges, corners or like irregularities;

(8) A pair of unbalanced fly-wheels 70, 70' keyed to a shaft 71, which passes through the centre of equilibrium of the screen, an electric motor 72 and a pulley and belt drive 73 for revolving said fly-wheels and thus actuating the screen in the manner described.

Various changes and modifications may be conveniently made in the structural details of vibrating screens of the improved design described, without substantially departing from the spirit and the salient ideas of this invention:

In order to further reduce the total weight of the screen—instead of heavy helical springs, usually provided for resiliently supporting the nuts of the screw bolts for tensioning the screen cloth, resilient steel-washers 80 of conical cross sectional shape may be provided to advantage, which are symmetrically assembled in pairs, namely in opposed position to each other as seen in Fig. 3.

What I claim is:

In a vibrating screening apparatus, the combination with a rectangular screen cloth, of an open box frame comprising two spaced side beams and two cross beams for supporting said screen cloth, a plurality of spaced screw bolts attached to said cross beams and screen cloth for tensioning the latter in longitudinal direction, and a plurality of frame stiffening elements in the form of tubular struts extending between said cross beams, namely in vertical alignment with said screw bolts and closely underneath the latter, a roof plate being provided above the feed end of the screen cloth so as to protect the latter against destructive impacts by the material under treatment, a layer of packing material at the feed end of the screen cloth engaging the latter from underneath, and a bracket plate for securing said layer in its popsition,—said bracket and roof plates being joined together so as to present an additional stiffening element.

HANS GERHARD LINKE.