Nov. 7, 1961 J. K. ROSE 3,008,140

MEANS FOR INDEPENDENT ORIENTATION OF ANTENNAS ON A MAST

Filed June 10, 1953 3 Sheets-Sheet 1

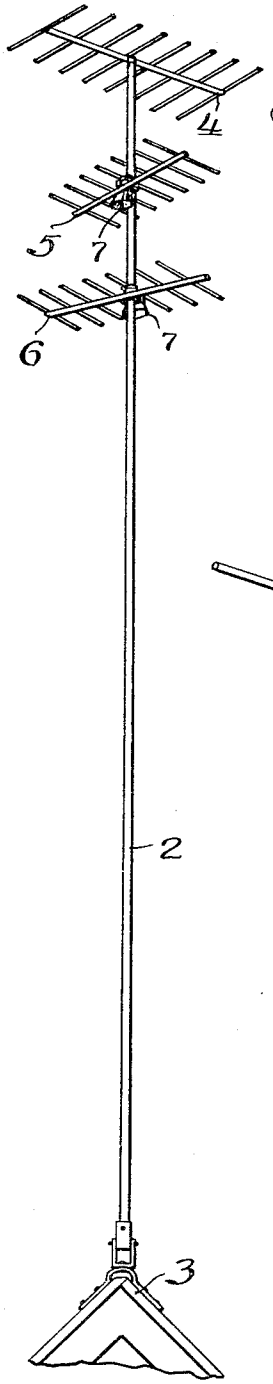

Fig. 1

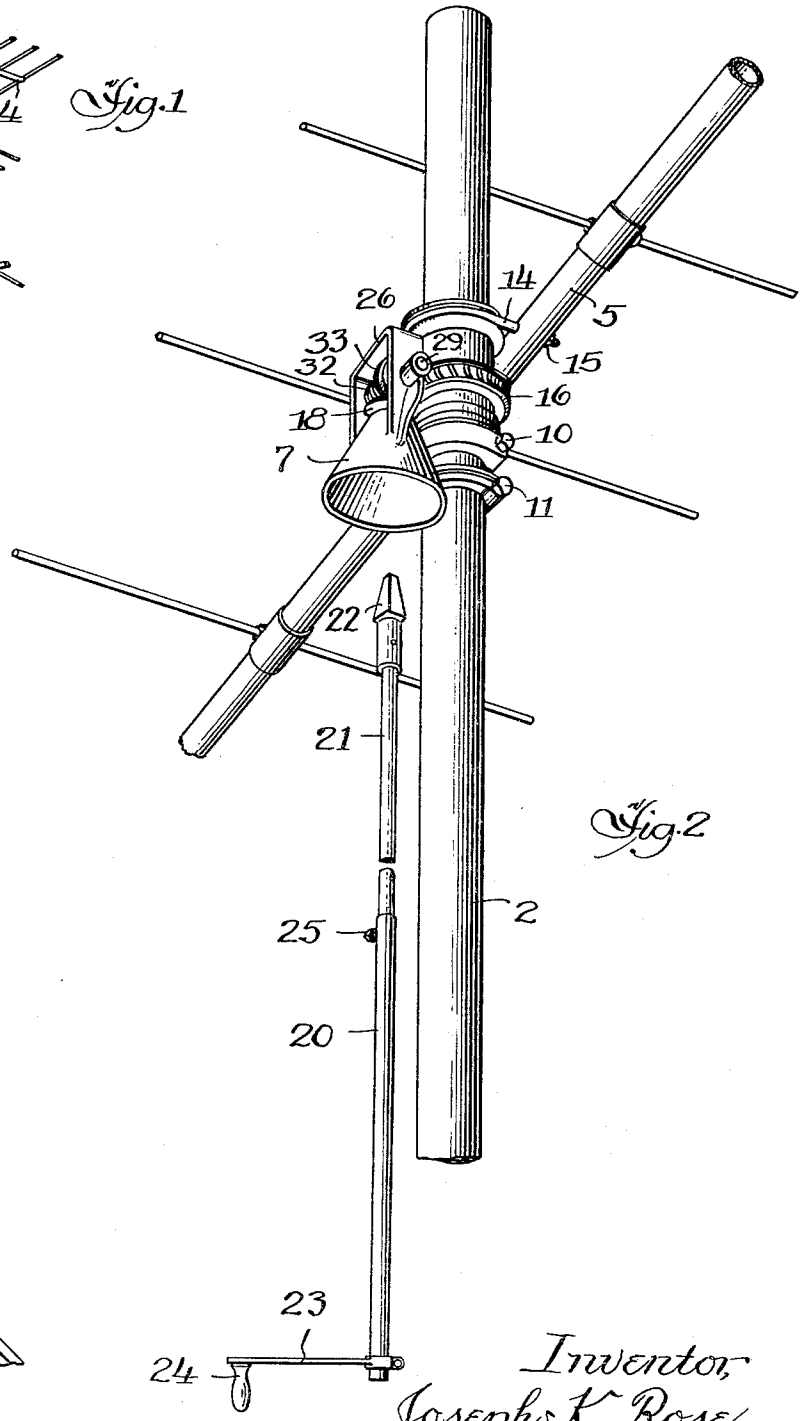

Fig. 2

Inventor,
Joseph K. Rose,
By: Benjamin Schlosser Atty

Nov. 7, 1961 J. K. ROSE 3,008,140

MEANS FOR INDEPENDENT ORIENTATION OF ANTENNAS ON A MAST

Filed June 10, 1953 3 Sheets-Sheet 2

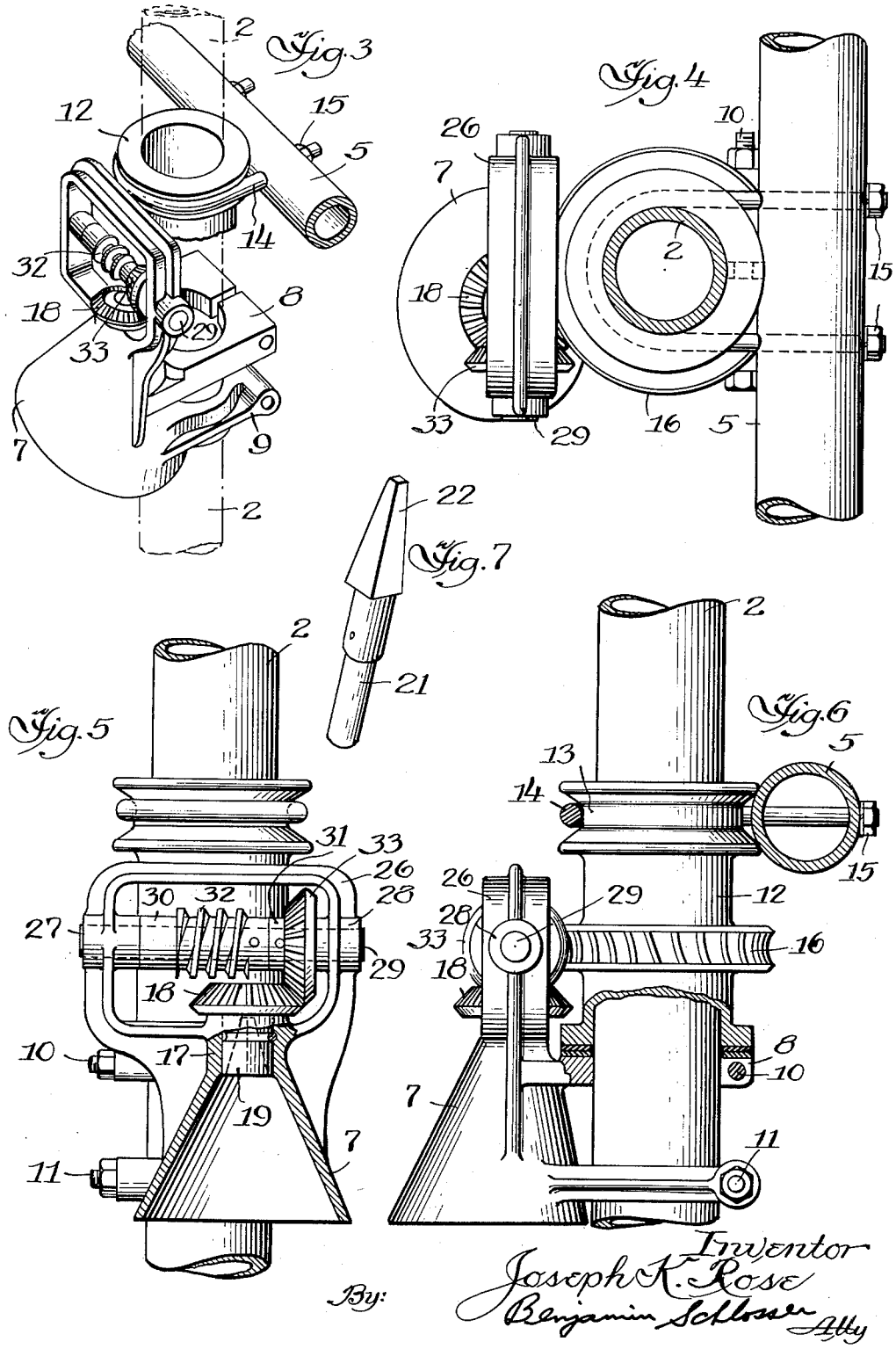

Inventor
Joseph K. Rose
By: Benjamin Schlosser Atty

Nov. 7, 1961 J. K. ROSE 3,008,140

MEANS FOR INDEPENDENT ORIENTATION OF ANTENNAS ON A MAST

Filed June 10, 1953 3 Sheets-Sheet 3

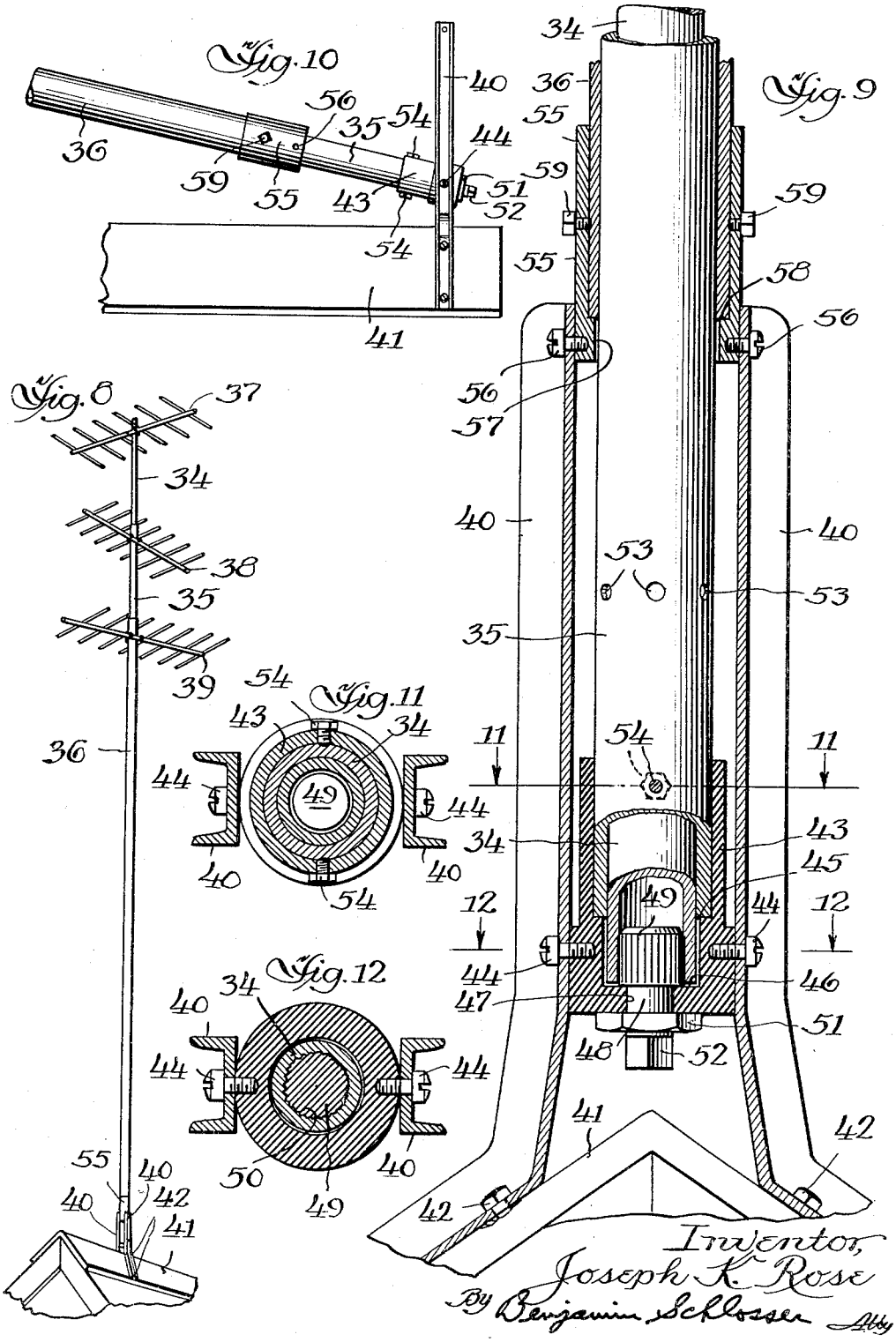

United States Patent Office

3,008,140

Patented Nov. 7, 1961

1

3,008,140
MEANS FOR INDEPENDENT ORIENTATION OF ANTENNAS ON A MAST

Joseph K. Rose, 2323 W. Devon Ave., Chicago, Ill.

Filed June 10, 1953, Ser. No. 360,707
2 Claims. (Cl. 343—758)

This invention relates to means for independent orientation of antennas on a mast to selectively receive the television signals from broadcasting stations located in substantially different angular positions relative to the receiving antennas.

One of the characteristics of a television antenna is its directivity. This means that when pointed to or directed toward the transmitting antenna or signal source the signal pickup will be a maximum.

If the television antenna is rotated away from this direction, the signal pickup will be reduced. In the mechanical installation of a television antenna on its mast or tower, means must be provided for rotating the antenna until it is pointed in the direction of maximum signal pickup. It must then be mechanically secured to the mast or tower and kept in this fixed position without further movement.

If it is desired to pick up the signal selectively of two or more broadcasting stations located in substantially different directions from the receiving antenna, it is necessary to use a rotor which rotates the mast until the antenna is pointed at or correctly oriented for one of the desired signals. To receive the signal of the other broadcasting station, the mast or tower must again be rotated until the signal of the other station is received.

Another method of selectively receiving the signal of two or more stations located in substantially different angular positions relative to the receiving antennas is to use an antenna for each of the desired stations. Each antenna is directed toward the desired station.

To orient a single antenna on a mast or tower is relatively simple as the mast or tower can be rotated at the bottom until the antenna at the top is properly positioned rotationally.

However, if there are two or more antennas on such a mast or tower, this method can be used for one of the antennas only. To orient the other antenna, it is necessary to get up on a ladder and orient the second antenna without disturbing the position of the mast or tower.

If a tower is used, the tower can be climbed. However, most installations use a mast or single tube which can not be climbed. To reach the antenna with a ladder is difficult and dangerous. If the mast is mounted on a roof top the difficulty and danger is increased because of the sloping nature of most home roof constructions.

In my method, any one of two or more antennas can be independently oriented from the base of the mast or tower without disturbing the orientation of any of the other antennas. This is accomplished in two ways:

In one method, the mast is composed of concentric sections and an antenna is rigidly secured to the top of each section. The mast is mounted at its base in such a manner that each concentric section can be rotated to a new fixed position without affecting the position of the other concentric sections. Thus, each antenna is independently oriented.

In the other method the boom or longitudinal member of the antenna is rotatably secured to the mast or tower by means of a worm gear assembly. The worm gear is rotated by a set of bevel gears one of which is reached through a funnel shaped member.

When it is desired to change the orientation of one of the antennas, a person standing adjacent the base of the mast extends a rod upwardly with the upper end extending into the mouth of the funnel-shaped member which guides it into engagement with a hollow stem extending

2

downwardly from one of the bevel gears into the neck of the funnel-shaped member. The hollow stem is rotatable in the neck of the funnel-shaped member, and its inside surface is non-circular. The upper end of the rod fits into the hollow stem, and the bevel gear is rotated by rotating the rod. This rotates the worm gear which turns a larger gear rigidly secured to a sleeve to which the boom of the antenna is secured. Thus the antenna is oriented to the desired point.

Wind or other forces exerted on the antenna will not change its rotational position. This is because it is characteristic of a worm gear that the worm will cause the gear to which it is engaged to rotate, but the gear itself is locked against the worm and can not rotate against it.

By either of these two methods a person standing at the base of the mast, whether it be on the ground or on the roof, can safely and easily orient any of the antennas without affecting the orientation of the other antennas and without the necessity of getting up on a ladder.

It is an object of my invention to provide simple, efficient means for securing a plurality of antennas to a mast or tower and for readily orienting any one of the antennas from a position adjacent the base of the mast or tower without disturbing the orientation of any of the other antennas.

Another object is to provide a mast of a plurality of concentric sections which may be rotated independently from a position adjacent the base of the mast, and to secure an antenna rigidly to each of said sections.

It is a further object of my invention to provide a mast or tower with a plurality of antennas each secured to a separate gear assembly arranged at different radial positions relative to the mast or tower and to provide each gear assembly with means for guiding a rod raised upwardly from a position adjacent the base of the mast or tower into engagement with the gear assemblies whereby any of said gear assemblies may be actuated to orient an antenna secured thereto.

Other objects and advantages of the invention will become apparent upon reading the following specification, taken in conjunction with the accompanying drawings showing two preferred embodiments of the invention, and in which:

FIG. 1 is a perspective view of a mast mounted on the top of a house and provided with three antennas;

FIG. 2 is a fragmentary perspective view showing a portion of the mast with a single antenna mounted thereon and a rod for orienting the antenna to any desired position;

FIG. 3 is a fragmentary perspective view showing the means for mounting the antenna on the mast;

FIG. 4 is a top plan view of the structure shown in FIG. 3;

FIG. 5 is a fragmentary side elevational view of the structure shown in FIG. 3;

FIG. 6 is another side elevational view showing the structure of FIG. 3 from a different angle;

FIG. 7 is a fragmentary perspective view of the upper end of the rod adapted to orient the antenna relative to the mast in the embodiment illustrated in FIGS. 1 to 6, inclusive;

FIG. 8 is a perspective view of a sectional mast having an antenna rigidly secured to each section of the mast;

FIG. 9 is a fragmentary cross sectional view, on an enlarged scale, showing the construction and manner of supporting the lower end of the sectional mast;

FIG. 10 is a side elevational view showing the means for mounting the mast to facilitate erection thereof;

FIG. 11 is a cross sectional view taken along the line 11—11 of FIG. 9; and

FIG. 12 is a cross sectional view taken along the line 12—12 of FIG. 9.

Although in the following description the structure to which the antennas are secured will, for convenience, be referred to as a mast, it will be understood that either a mast or tower may be used.

Referring to the drawings, and particularly to FIGS. 1 to 6, the reference numeral **2** indicates a mast mounted in conventional manner on a rooftop **3**. A plurality of antennas **4**, **5**, and **6** are mounted adjacent the top of the mast. The antenna **4** is rigidly mounted because it may be set in desired position to improve the reception of the television channel to which it is oriented at the time the mast is originally erected. However, it is obvious that it may also be mounted in the same manner as the antennas **5** and **6**. The mounting for the antennas **5** and **6** is the same so the following description will be limited to a single antenna.

An inverted funnel-shaped guide member **7** is rigidly secured to the mast **2** by means of a pair of split clamp members **8** and **9**, each of which is held in tightened position by means of bolts. The clamping arms **8** and **9** are preferably integral with the funnel-shaped member **7**, but, if desired, may be formed separately and rigidly secured to the funnel-shaped member. A sleeve **12** is rotatably mounted on the mast **2** above the upper clamping arm **8** and is supported thereby. The upper end of sleeve **12** is provided with a groove **13** adapted to receive a U-shaped clamp **14** which holds the antenna **5** rigidly to the sleeve. A simple way of securing the antenna in place is illustrated in FIGS. 3 and 5 wherein the U-clamp projects through apertures in the stem of the antenna and nuts **15** are tightened against the outer surface of the stem to hold the antenna securely in place. Any suitable means for securing the antenna rigidly against the sleeve **12** may be used. The sleeve **12** is provided with a worm wheel **16** which is preferably integral with the sleeve but may be formed separately and rigidly secured to the sleeve in any desired manner.

The funnel-shaped member **7** is provided at its upper edge with an open upstanding neck portion **17**. A bevelled gear **18** is provided with a stem **19** which fits into the neck portion **17** and is rotatable therein. The stem **19**, which may be integral with the bevel gear **18** or may be rigidly secured thereto, is hollow, and its interior surface is preferably square, although any non-circular surface might be used. The bevel gear **18** is manually rotated from a position adjacent the base of the mast by means of a rod **21** having its upper end shaped like a truncated pyramid, as indicated at **22**. A crank **23** is secured to the lower end of the rod **20** and is preferably provided with a handle **24**, by means of which the rod may be rotated. The rod may be of a single length, but for convenience is preferably made of telescoping sections which are held in extended position by means of a set screw **25**. When the rod is fully extended, the end **22** is inserted through the bottom of the funnel-shaped member **7** and, because of its shape, will find its way in the hollow stem **19**. Rotation of the rod **20** will then cause rotation of the bevel gear **18** in the same direction.

A frame member **26** integral with the funnel-shaped member **7** extends upwardly therefrom in the shape of a hollow rectangle and is provided on its vertical branches with a pair of horizontally extending bearings **27** and **28** which are axially aligned with each other. A shaft **29** is rotatably mounted in the bearings **27** and **28**. A worm gear **30** and a sleeve **31** are mounted on the shaft **29** between the bearings **27** and **28**. The worm **30** is provided on its outer surface with teeth **32** meshing with the teeth of worm wheel **16**. A bevel gear **33**, having its teeth in mesh with the teeth of bevel gear **18**, is mounted on the sleeve **31**.

When the gear **18** is rotated it will in turn rotate the gear **33**. Since the gear **33** is keyed to the shaft **29**, its rotation will cause the worm **30**, which is also keyed to the shaft **29**, to rotate. The teeth **32**, which mesh with the worm wheel **16**, will thereupon rotate the worm wheel to move the sleeve **12**, to which the antenna is rigidly secured. Accordingly, it is a very simple thing to rotate the antenna in either direction without disturbing the setting of any other antennas mounted on the mast. The pitch of the teeth **32** and the teeth of the worm wheel **16** will prevent rotation of the worm wheel by wind blowing against the antenna. Accordingly it is not necessary to provide any other means for locking the antenna against such rotation. It should also be noted that the funnel-shaped member **7** of each antenna is preferably displaced angularly relative to the funnel-shaped members of the other antennas so that any of them is easily accessible to the rod **20**.

In the embodiment of the invention illustrated in FIGS. 8 to 12, the mast comprises a plurality of concentric sections **34**, **35** and **36**. The intermediate and outer sections are tubular, and the inner diameter of the outer section is slightly larger than the outer diameter of the intermediate section which fits therein. The intermediate section extends beyond both ends of the outer section. The inner section fits within the intermediate section and extends beyond each end thereof. The antennas **37**, **38** and **39** are respectively secured rigidly to the upper edge portion of these mast sections. Each of the mast sections is rotatable independently of the other sections as hereinafter described. A pair of upstanding channel members **40**, rigidly secured to a rooftop **41**, as indicated at **42** in FIG. 9, provide a suitable support for the lower portion of the mast. A cup shaped member **43** is pivotally secured to the channel members **40** by means of a pair of screws or bolts **44**. The cup member **43** is provided with an offset internal shoulder **45**. The bottom wall **46** is provided with an aperture **47**. The bottom wall **46** supports the lower end of the inner mast section **34**, and the shoulder **45** supports the lower end of the intermediate mast section **35**. The mast section **34** is either tubular or has a vertical bore in its lower edge portion, and a stud **48** which fits into the aperture **47** projects into the hollow bottom portion of the inner mast section **34**. The upper portion of the stud **48** is provided with an enlarged portion **49** which fits snugly against the interior surface of the inner mast section into which it projects. Preferably the outer periphery of the enlarged portion **49** and the inner surface of the mast section **34** are serrated, as indicated at **50** in FIG. 12, to insure rotation of the inner mast section **34** when the stud **48** is rotated. The lower edge of the enlarged portion **49** extends slightly beyond the periphery of the aperture **47** and rests on the bottom wall **46** so that the stud **48** can not drop out of place. A nut **51** is threaded on the lower portion of the stud **48** and tightened against the bottom of the cup member **43** to hold the stud securely in place. The lowermost end of the stud **48** which projects below the bottom of the cup member **43** is provided with a square end, as indicated at **52**, so that it may be turned by a wrench to rotate the inner mast section **34**.

The intermediate mast section **35** is provided with a plurality of radially spaced apertures **53** positioned above the upper end of the cup member **43**. The intermediate mast is rotated by inserting a rod into any of the apertures **53** and exerting pressure in a radial direction. A pair of screws **54**, threaded through the wall of the cup member **43**, bear against the outer surface of the intermediate mast section **35** to prevent rotation of the intermediate mast section when either of the other mast sections is rotated. The screws **54** are loosened when it is desired to rotate the intermediate mast section.

A sleeve **55** is secured to the upper edge portions of the channel members **40** above the apertures **53** by means of a pair of screws **56**. The sleeve **55** is provided with an aperture **57** in its bottom wall through which the intermediate mast section **35** projects. An internal shoulder **58** is provided adjacent the bottom of the sleeve **55** to furnish suitable support for the lower end of the outer mast section **36** which rotates in the sleeve **55**. The outer section **36** is provided with apertures (not shown) similar to the apertures **53** so that it may be rotated in the same man-

ner as the intermediate mast section. A pair of screws 59 extending through the vertical walls of the sleeve 55 bear against the outer surface of the outer mast section 36 to prevent accidental rotation thereof. The screws 59 are loosened when it is desired to rotate the outer mast section.

When the mast is to be erected, the supporting channel members 40 are rigidly secured to the rooftop, and the mast is completely assembled except for the screws 56. This assembly may be done while the mast is substantially parallel to the rooftop, as indicated in FIG. 10. The mast is then moved upwardly pivotally on the screws 44 until it is aligned with the channel members 40. The screws 56 are then inserted in place and the mast is held in upright position.

From the foregoing it will be seen that I have devised a television mast or tower upon which a plurality of antennas may be mounted in such a manner that any of the antennas may be oriented independently of the others. This arrangement permits each antenna to be individually oriented to tune in a particular broadcasting channel so that no manipulation of the mast or antennas is required when the television viewer changes the receiver from one channel to another. In the embodiment illustrated in FIGS. 1 to 7 the antennas are each rotated relative to the mast, while in the embodiment illustrated in FIGS. 8 to 12 the mast is made sectional, and each antenna is rigidly secured to one of the sections so that any antenna may be oriented merely by rotating the mast section to which it is secured.

Although I have described two preferred embodiments of my invention in considerable detail, it will be understood that the description is intended to be illustratvie, rather than restrictive, as many details may be modified or changed without departing from the spirit or scope of my invention. Accordingly, I do not desire to be restricted to the exact structure described, except as limited by the appended claims.

I claim:

1. In combination, a rigid supporting member, a cup shaped member mounted in said supporting member, said cup shaped member having a bottom wall and an internal shoulder positioned above said bottom wall, a sleeve mounted in said supporting member above said cup shaped member and concentric therewith, said sleeve having an internal shoulder, a television mast, said mast comprising an inner section having its lower end seated on the bottom wall of said cup shaped member, a tubular intermediate section substantially enclosing said inner section and having its lower end seated on the shoulder of said cup shaped member, and a tubular outer section substantially enclosing said intermediate section and having its lower end seated on the shoulder of said sleeve, each of said mast sections being independently rotatable, an antenna rigidly secured to each of said mast sections, each of said antennas being spaced vertically from the others a distance sufficient to permit it to operate substantially independently from the others, and means for rotating each of said sections independently whereby said antennas may be individually oriented to different broadcasting stations.

2. In combination, a rigid supporting member, a cup shaped member pivotally supported in said supporting member, said cup shaped member having a bottom wall provided with an aperture therein and an internal shoulder positioned above said bottom wall, a sleeve provided with an internal shoulder and mounted in said supporting member concentrically above said cup shaped member, a television mast comprising a tubular outer section having its lower end seated on the internal shoulder of said sleeve, an intermediate tubular section positioned in said outer section and having its lower end seated on the internal shoulder of said cup shaped member, and an inner section positioned in said intermediate section and having its lower end seated on the bottom wall of said cup shaped member, a stud projecting through said aperture into the lower end of said inner section, the lower end of said stud being shaped to facilitate rotation thereof, the upper end of said stud engaging the inner surface of said inner mast section to rotate it independently of said other mast sections when said stud is rotated, means for independently rotating said intermediate and outer mast sections, and an antenna rigidly secured to each of said mast sections, each of said antennas being spaced vertically from the others a distance sufficient to permit it to operate substantially independently from the others.

References Cited in the file of this patent

UNITED STATES PATENTS

1,744,548	Hershey	Jan. 21, 1930
1,812,695	Harms	June 30, 1931
2,280,738	Bace	Apr. 21, 1942
2,535,049	De Rosa	Dec. 26, 1950
2,583,210	Edwards	Jan. 22, 1952
2,605,417	Andrews	July 29, 1952
2,623,999	Kulikowski	Dec. 30, 1952
2,631,238	Hills	Mar. 10, 1953
2,642,754	De Conti	June 23, 1953
2,643,335	Anderson	June 23, 1953