US00D415478S

United States Patent [19]

Chuo et al.

[11] **Patent Number: Des. 415,478**

[45] **Date of Patent: ** Oct. 19, 1999**

[54] **COMPUTER DISPLAY**

[75] Inventors: **Yu-Hsin Chuo**; **Yu-Jing Lin**, both of Taipei, Taiwan

[73] Assignee: **Compal Electronics, Inc.**, Taipei, Taiwan

[**] Term: **14 Years**

[21] Appl. No.: **29/094,391**

[22] Filed: **Oct. 1, 1998**

Related U.S. Application Data

[51] **LOC (6) Cl.** **14-02**

[52] **U.S. Cl.** **D14/113**; D14/126

[58] **Field of Search** D14/100, 106, D14/113, 101, 124–129; 248/917–924; 345/104, 133, 156, 168, 87, 173; 348/180, 184, 325, 739; 349/1, 2, 11, 62; 341/12

[56] **References Cited**

U.S. PATENT DOCUMENTS

D. 391,934 3/1998 Uehara et al. D14/113

D. 394,248 5/1998 Duan D14/113

D. 398,911 9/1998 Lin D14/113

Primary Examiner—Freda Nunn

Attorney, Agent, or Firm—Bacon & Thomas, PLLC

[57] **CLAIM**

The ornamental design for a computer display, as shown and described.

DESCRIPTION

FIG. **1** is a perspective view showing our new design for a computer display;

FIG. **2** is a front elevational view thereof;

FIG. **3** is a rear elevational view thereof;

FIG. **4** is a left side elevational view thereof;

FIG. **5** is a right side elevational view thereof;

FIG. **6** is top view thereof; and,

FIG. **7** is a bottom view thereof.

1 Claim, 4 Drawing Sheets

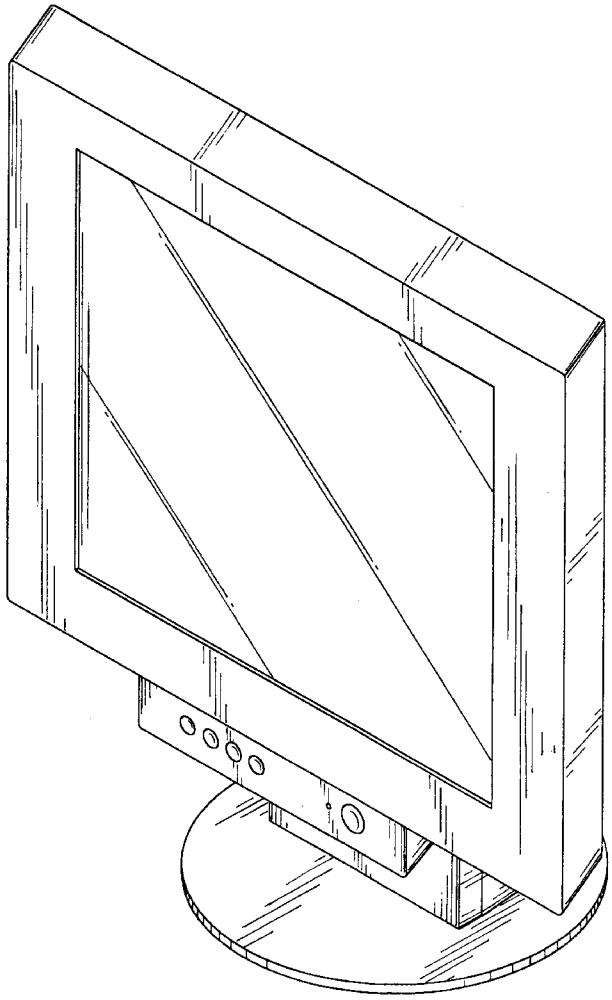

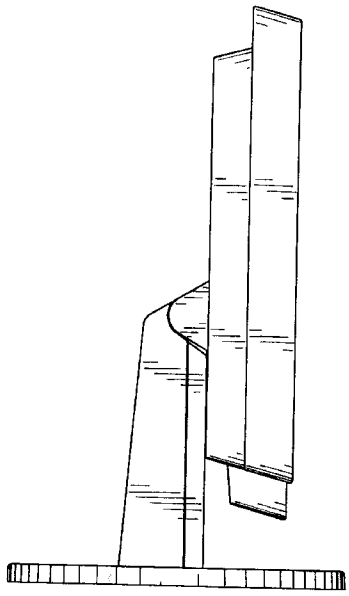

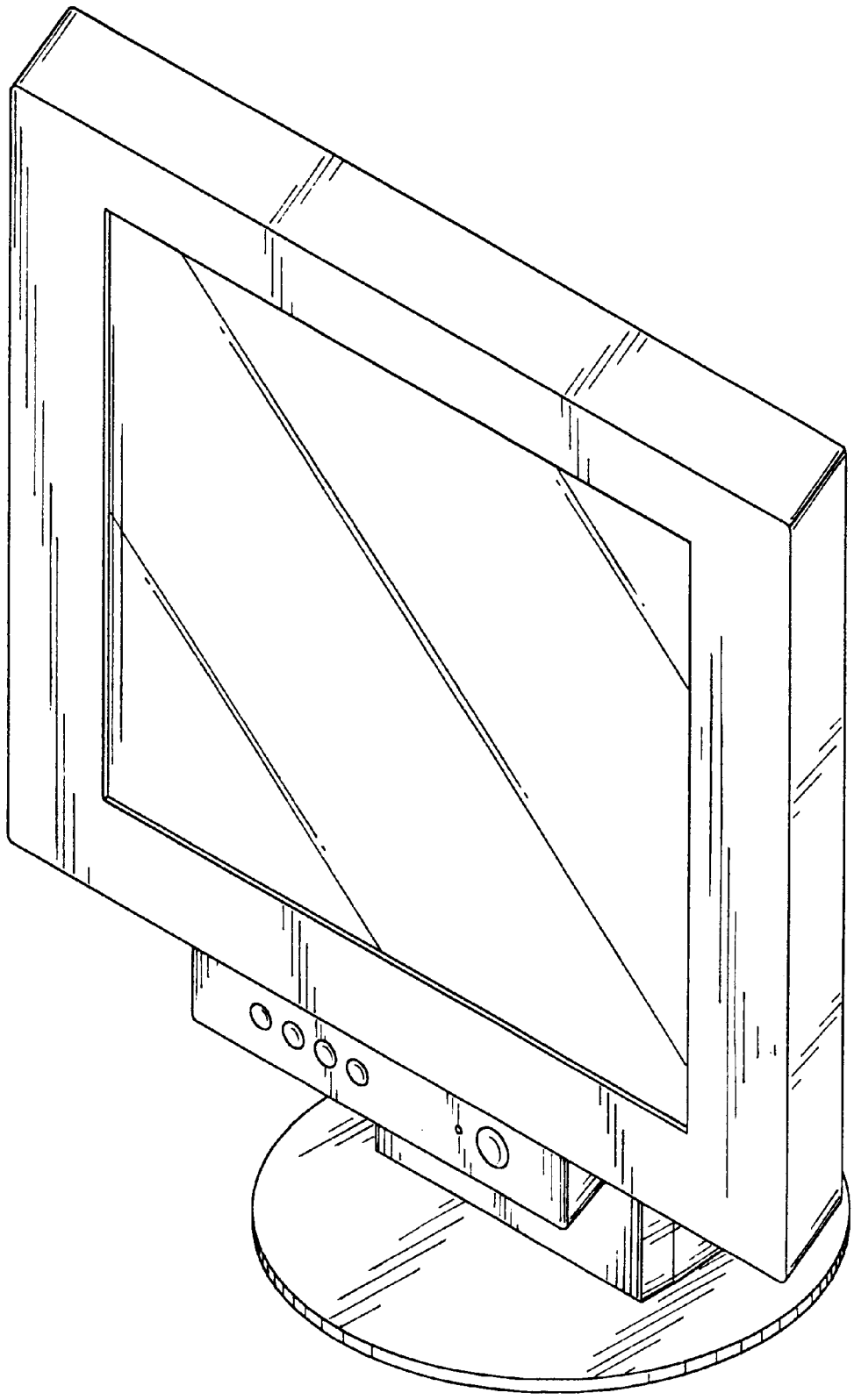

Fig.1

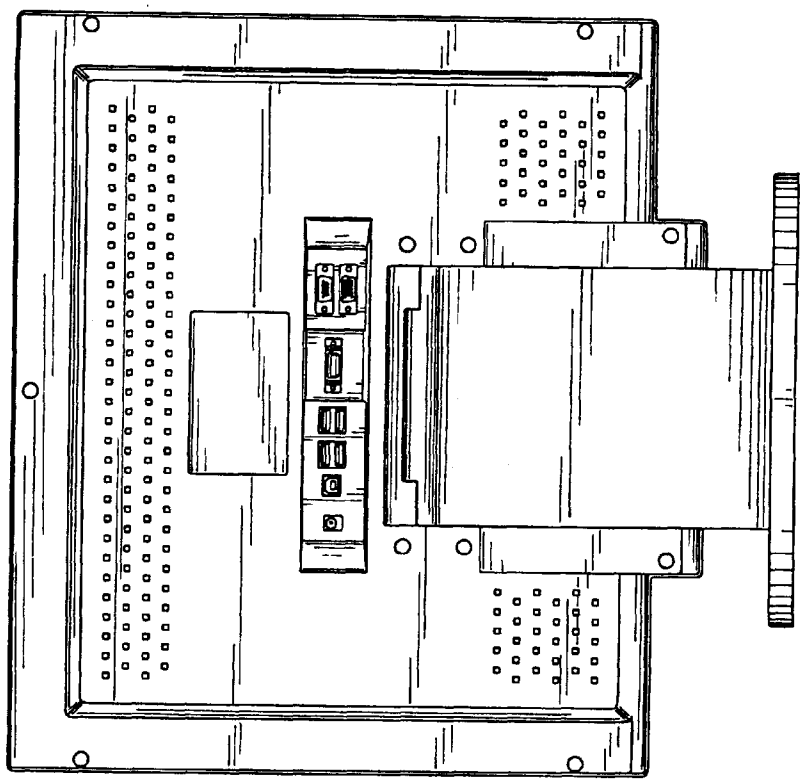

Fig.3

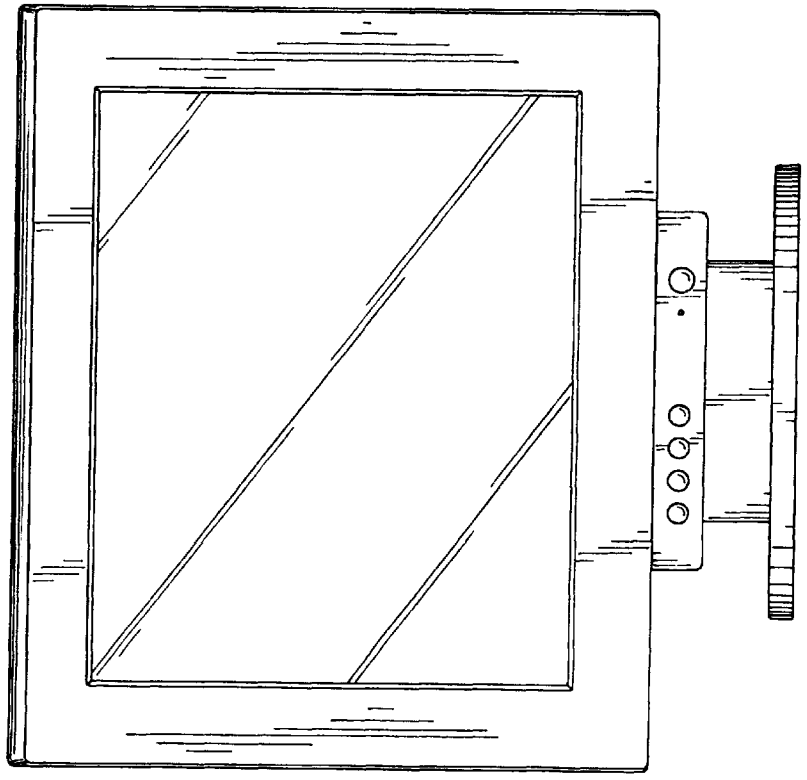

Fig.2

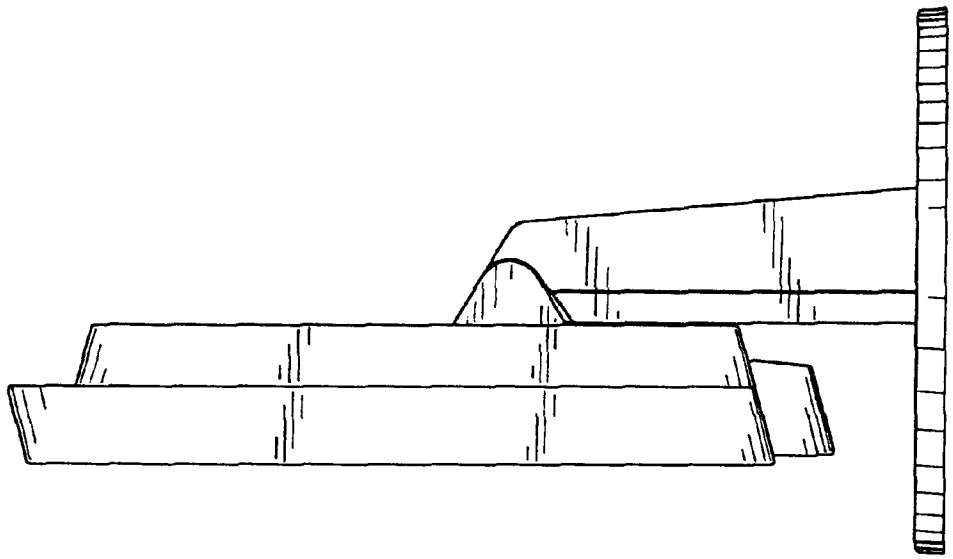

Fig.5

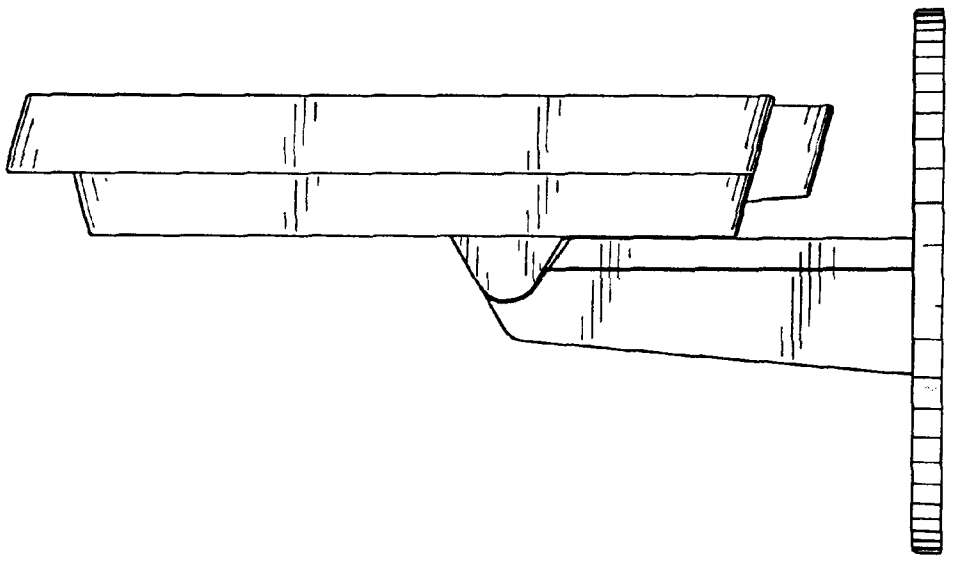

Fig.4

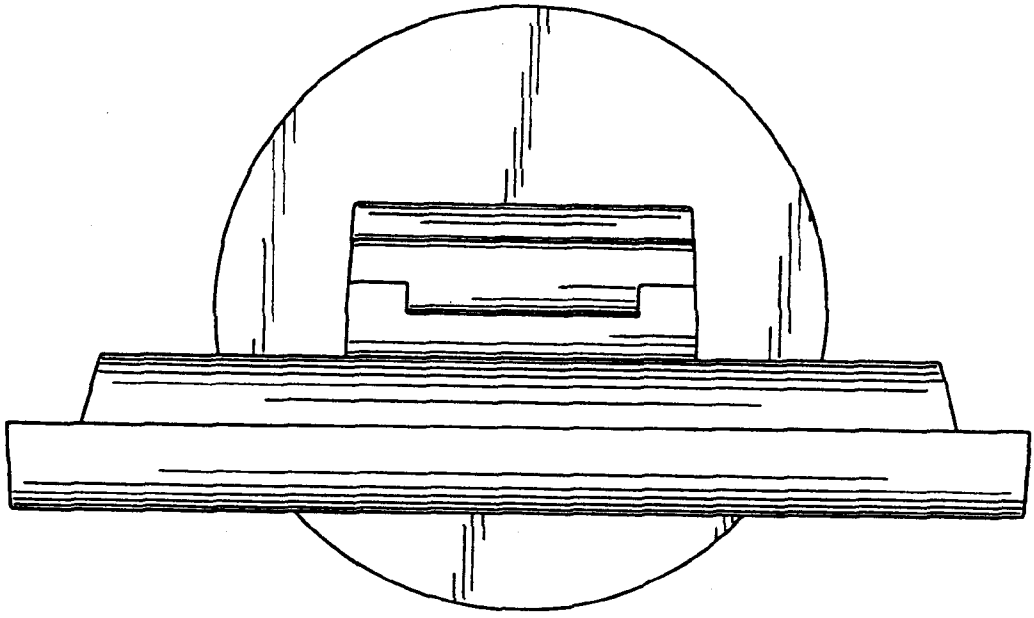

Fig.6

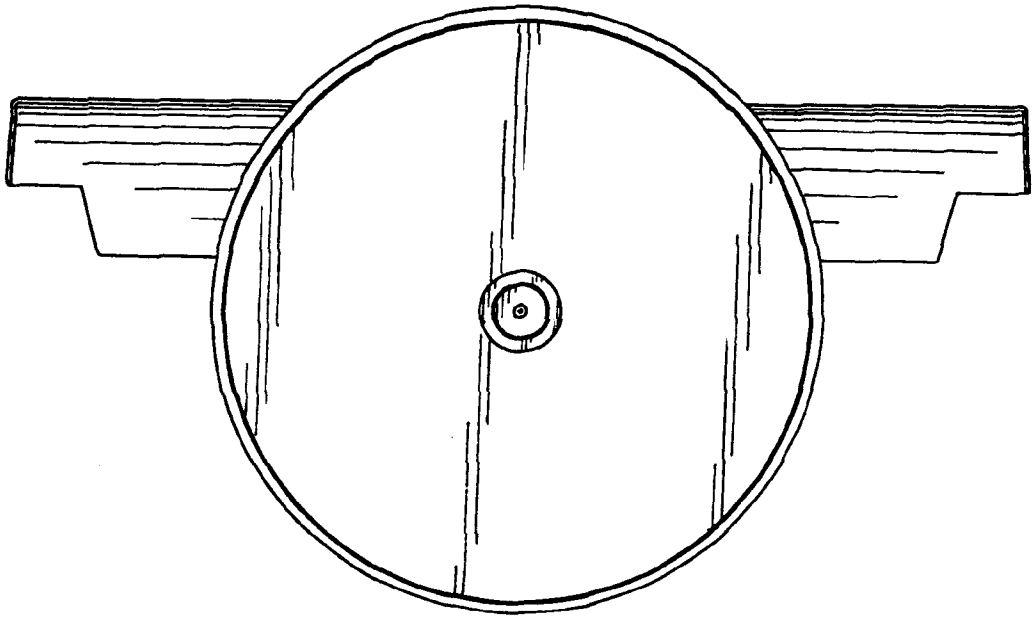

Fig.7