No. 675,462. Patented June 4, 1901.

D. BAKER.

GAS VALVE FOR HOT BLAST STOVES.

(No Model.) (Application filed Sept. 25, 1900.)

Fig. 1.

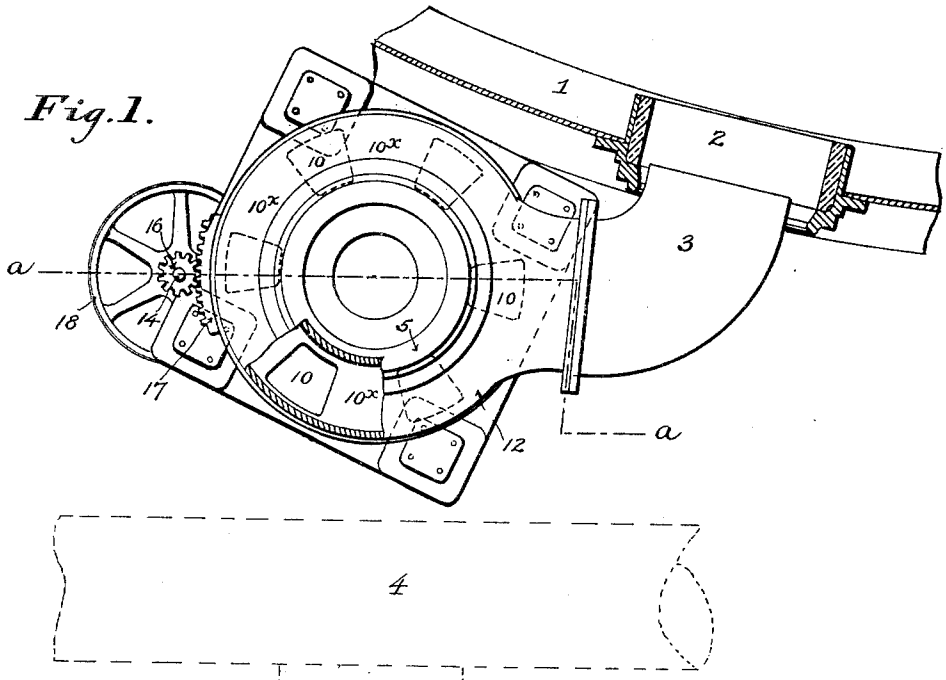

Fig. 2.

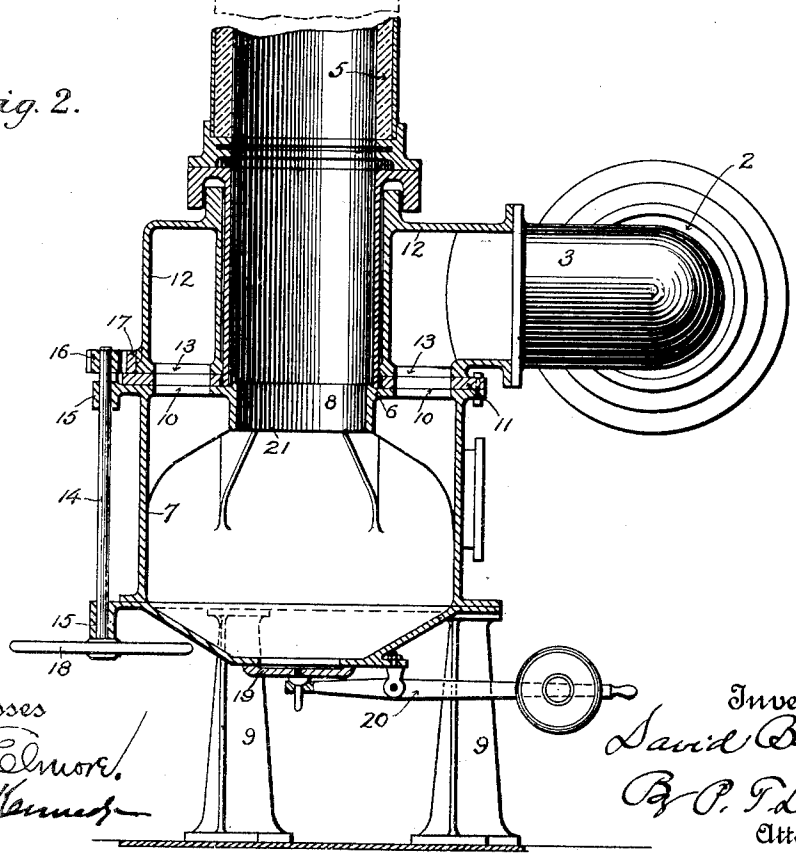

Witnesses
F. S. Elmore.
N. R. Kennedy

Inventor
David Baker
By P. T. Dodge
Attorney

THE NORRIS PETERS CO., PHOTO-LITHO., WASHINGTON, D. C.

UNITED STATES PATENT OFFICE.

DAVID BAKER, OF CHICAGO, ILLINOIS.

GAS-VALVE FOR HOT-BLAST STOVES.

SPECIFICATION forming part of Letters Patent No. 675,462, dated June 4, 1901.

Application filed September 25, 1900. Serial No. 31,040. (No model.)

To all whom it may concern:

Be it known that I, DAVID BAKER, of Chicago, county of Cook, and State of Illinois, have invented a new and useful Improvement in Gas-Valves for Hot-Blast Stoves, of which the following is a specification.

In the operation of hot-blast stoves in which the furnace-gases are utilized to heat the furnace-blast it is the usual practice to supply the furnace-gases to the stove through a movable nozzle or burner adapted to be projected in an opening in the stove, the nozzle being combined with a cut-off valve so arranged that when it is withdrawn from the stove the valve will be operated to shut off the supply of gases from the main.

This invention relates to a device of this nature; and it consists of an improved form of valve and nozzle combined to operate as described and having in view simplicity of construction, effectiveness in operation, and uniformity in the supply of gases to the stove.

The invention consists also in the details of construction and combination of parts hereinafter described and claimed.

In the accompanying drawings, Figure 1 is a top plan view of my device and a portion of a hot-blast stove, the latter being partly in section. Fig. 2 is a vertical central section through the device on the line *a a* of Fig. 1.

Referring to the drawings, 1 represents a hot-blast stove provided with an opening 2, through which the furnace-gases are injected by a nozzle or burner 3 from an overhead gas-main 4 (indicated by dotted lines) and through a branch supply-pipe 5, connected at its upper end with the main and extending downwardly. The lower end of the branch pipe is seated on an inwardly-extending flange 6 on the top of a casing or chamber 7 and communicating therewith through a central opening 8 in the flange, the chamber being sustained by standards 9, rising from the ground. This flange is formed with a series of openings 10 and intervening closed portions $10^{\times}$ and has bolted to it a valve-seat 11 in the form of a ring-plate having openings corresponding in position and size with those in the flange. Loosely surrounding the lower end of the branch supply-pipe and bearing on the valve-seat is a rotary annular valve-chamber 12, closed at its upper end and formed at its lower end, where it bears on the valve-seat, with a series of openings 13, corresponding in size and number with the openings through the valve-seat, which openings are adapted by the rotation of the valve-chamber to register with each other to permit of the flow of the gases or be adjusted out of register to cut off the supply of gas. The nozzle or burner 3, before alluded to, projects from and communicates with the side of the annular chamber, and the relative arrangement of the parts is such that when the end of the nozzle is projected into the opening in the side of the stove, as shown in Fig. 1, the openings in the valve-seat and in the base of the annular chamber will be in register, permitting the gases to pass from the branch pipe through the valve-chamber and out through the nozzle into the stove. When, on the other hand, the nozzle is withdrawn from the stove by the rotation of the annular chamber, the valve-openings will be closed and the supply of gas cut off. The rotation of the annular valve-chamber to thus control the flow of the gas to the stove is effected by a vertical operating-shaft 14, mounted in bearings 15 on the side of the casing 7, which shaft is provided on its upper end with a pinion 16, engaging a rack 17 on the outer side of the annular valve-chamber. The lower end of the shaft has fixed to it a hand-wheel 18 for operating it.

The fixed chamber 7 beneath the end of the branch pipe serves as a receiver for the dust, the latter falling therein as the gas passes upward through the valve-openings. The accumulated dust may be removed from time to time through a circular door 19 in the bottom of the chamber, held closed by a weighted lever 20, pivoted to the under side of the chamber.

For the purpose of preventing the direct passage of the gas from the branch supply-pipe to the valve-chamber, in order to more effectually secure a separation of the dust, I provide the inner edge of flange 6 with a vertical depending neck 21, around which the gas is compelled to pass before entering the valve-chamber.

From the construction described it will be seen that the gas is taken into the valve-chamber from above, the chamber being of

annular form and surrounding the supply-pipe. It is further seen that the withdrawal of the nozzle is effected by a rotary motion of the valve-chamber on an axis coincident with that of the supply-pipe, and as a result of a chamber of this form with the valve-openings wholly surrounding it the gas enters the valve-chamber uniformly at all points, so that a uniform flow of gas is insured.

Having thus described my invention, what I claim is—

1. In combination with a hot-blast stove a rotary annular chamber provided with a projecting nozzle, a gas-supply pipe extending axially within the chamber, and a valve for controlling the entrance of gas to the chamber, said valve being operatively connected with the annular chamber.

2. In combination with a hot-blast stove, a nozzle, a rotary chamber connected therewith, a pipe for supplying gas to the chamber, said pipe extending in the direction of the axis on which the chamber rotates, and a valve between said pipe and chamber operatively connected with the latter.

3. In combination with a hot-blast stove, a gas-supply pipe, a rotary annular chamber surrounding the same and movable on an axis coincident with that of the pipe, a valve for controlling the entrance of gas to the chamber operatively connected with the latter, and a nozzle connected with said chamber.

4. In combination with a hot-blast stove, a fixed chamber provided with an opening for the entrance of the gas, a supply-pipe communicating with said opening, an annular valve-seat on the chamber surrounding said opening and provided with valve-openings, an annular rotary valve-chamber bearing on the valve-seat and surrounding the supply-pipe and formed with valve-openings, and a nozzle connected with said chamber.

5. In combination with a hot-blast stove, an overhead gas-main, a vertical branch pipe extending downwardly therefrom, a fixed chamber with which the branch pipe communicates, a rotary annular valve-chamber surrounding said pipe and sustained by the fixed chamber, a valve between the fixed chamber and rotary chamber operatively connected with the latter and a nozzle attached to the valve-chamber.

In testimony whereof I hereunto set my hand, this 1st day of September, 1900, in the presence of two attesting witnesses.

DAVID BAKER.

Witnesses:
W. J. MELVIN,
HOLLIS A. FOX.