Aug. 14, 1934. H. RINIA 1,969,819

SCREENED COILS PROVIDED WITH A DEVICE FOR ADJUSTING THE SELF INDUCTANCE

Filed Oct. 15, 1930

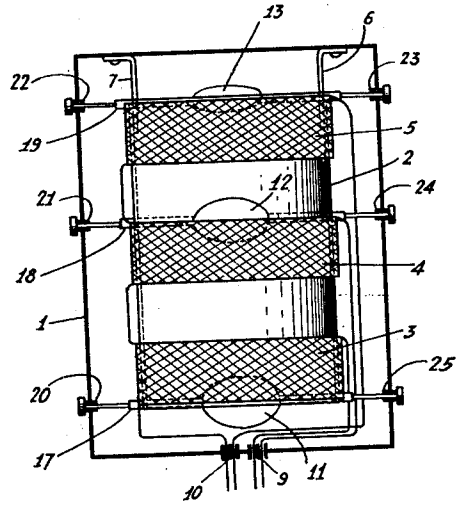

INVENTOR
HERRE RINIA
BY H. S. Swoer
ATTORNEY

Patented Aug. 14, 1934

1,969,819

UNITED STATES PATENT OFFICE

1,969,819

SCREENED COILS PROVIDED WITH A DEVICE FOR ADJUSTING THE SELF-INDUCTANCE

Herre Rinia, Eindhoven, Netherlands, assignor to Radio Corporation of America, a corporation of Delaware

Application October 15, 1930, Serial No. 488,755
In the Netherlands October 25, 1929

1 Claim. (Cl. 171—119)

In the series-manufacture of screened coils, consequently of coils mounted in a closed metal case, difficulties are often encountered due to the fact that the various coils of the same series have mutually different self-inductances. These differences, although as a rule not very great, are great enough to have when the coils are incorporated in wireless sets, an undesirable effect on the tuning, especially if a plurality of tuned circuits are operated with a single adjusting device.

There have been proposed various means permitting of altering the self-inductance after the case has been closed. One of these means consists in providing within the case a metal mass which after the case has been closed can be displaced from the outside so that its position relatively to the coil is altered.

However, owing to this the natural capacity of the coil is altered, and mostly to such extent that at small values of the tuning capacity a rather considerable influence is exerted on the condenser position, owing to which difficulties are experienced in adjusting a plurality of tuning condensers with a single device.

These difficulties are particularly prevalent if it is desired to provide in the screening case a plurality of coils destined for different ranges of wave-lengths.

If it is desired to have, for example three values of inductance, three coils are arranged in the case. For example, one coil may be taken separately and, two coils may be connected in series or the three coils may all of them be connected in series.

It is evident that other combinations are also possible.

According to the invention, near or opposite the coil is rotatably arranged a mass of metal whose axis of rotation preferably cuts the axis of the coil, the centre of the metal mass being located in the axis of the coil. As a rule the spindle of the metal mass cuts the axis of the coil at an angle of 90° although another angle is also possible and even may be advantageous in some cases. The metal mass may be constituted, for example by a disc or a closed winding. When cylindrical coils are used, the spindle of the metal mass according to the invention may be located at one end of the coil. Conveniently, the spindle is insulated or consists of insulating material.

If a plurality of coils are arranged within the screening case, each coil is provided with a separate rotatable metal disc or otherwise shaped mass. The above mentioned arrangement at the end of the coils affords the special advantage that the self-inductances of the various combinations can be adjusted without an adjustment being influenced by the following adjustment.

The first coil for example, may be adjusted while the others are short-circuited. If the disc or other metal body of the second coil is located at the end remote from the first coil, the second coil will act as a screen between the first coil and the metal disc pertaining to the second coil. The same remark applies to the following coils.

The invention affords the advantage that a large number of coils may be arranged in one case and that it is rendered possible to give the various self-inductances in a simple manner the required values.

The coils of the same series consequently become substantially equal to one another so that they can be replaced at once without alteration of the tuning of the apparatus.

In order that the invention may be more clearly understood and more readily carried into effect, it will be explained with reference to the accompanying drawing which represents, by way of example one embodiment thereof. The single figure of drawing is a longitudinal section with the enclosed parts in elevation.

1 is a screening case within which is arranged a coil cylinder 2 provided with three coils 3, 4 and 5, said cylinder being secured to the cover of the case by means of straps 6 and 7. The end of the coil 3 is led out of the case through a metal bush 9 provided in one of the end-faces of the cylindrical screening case close to the point where the axis of the coils cuts the said end-face. The other end is led out of the case through a second metal bush 10 also provided near the point of intersection of the axis of the coils and the end-face.

The end of the coil 3 is connected to one of the ends of the coil 4 whose other end is led out of the case in like manner as the two ends of the coil 3.

The coil 4 is connected to one of the ends of the coil 5 whose other end is led out of the case.

Four wires in total consequently emerge from the case as shown.

The correction of the self-inductance is effectuated with the aid of metal discs 11, 12 and 13 adapted to be rotated by the spindles on which they are mounted.

The spindles consist of middle-pieces 17, 18 and 19 of insulating material and of metal end-pieces 20, 21, 22, 23, 24 and 25. In order to rotate the spindles one or both ends of each spindle may be provided with a milled head as shown. After being adjusted in the correct position the spindles

may be fixed by soldering. In this case care should be taken that there remain no gaps between the ends of the spindles and the wall, owing to which the magnetic field might emerge from the case.

It is obvious that various changes and modifications may be made to the details of construction of the invention given above without departing from the general spirit of the invention.

The adjustment of the self-inductance preferably occurs in such manner that first the inductance of the coil 3 is adjusted by tuning the spindle 17 while short-circuiting the coils 4 and 5. Subsequently the coils 3 and 4 are connected in series, the coil 5 being short-circuited. The disc 12 is turned until the total inductance of the coils 3 and 4 has the desired value.

The alteration of the position of the disc 12 has no influence on the inductance of the coil 3 for 12 is arranged in such manner that the coil 4 acts as a screen between the disc 12 and the coil 3. In a similar manner the coil 5 acts as a screen for the disc 13 so that the latter can be turned without any influence being exerted on the coil 4.

It has been found that in the manner above described a very rapid and exact adjustment of the inductance is possible without alteration of the capacity of the coils. Particularly for the series-manufacture of inductance coils destined for receiving sets comprising a plurality of condensers mounted on a shaft, such an adjustment of the inductance is of very great importance.

I claim:

In a coil system for use in tunable circuits adapted to be adjusted to different frequency ranges, an inductance winding comprising at least two separate coils enclosed within a shielding device, means external the shielding device to allow the connection of both the coils in series so as to provide a different inductance value than the inductance value of either coil, an adjustable conductive body within said shielding device and associated with one of said coils for individually adjusting the inductance value thereof, said conductive body being disposed with respect to the two coils so that the coil associated with the conductive body acts as a shielding element between the conductive body and the other coil, a second adjustable conductive body within said device and associated with said other coil for adjusting the total inductance value of both coils when connected in series, said second conductive body being disposed with respect to the two coils so that the coil associated with the second conductive body acts as a shielding element between the second conductive body and the first coil.

HERRE RINIA.