Oct. 2, 1928. 1,686,152

J. C. GARROTT

VALVE LIFTER

Filed Dec. 20, 1926

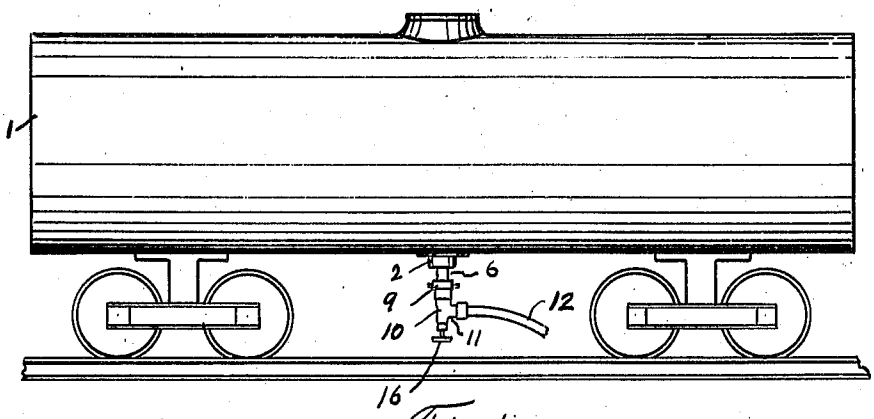

Fig. 1.

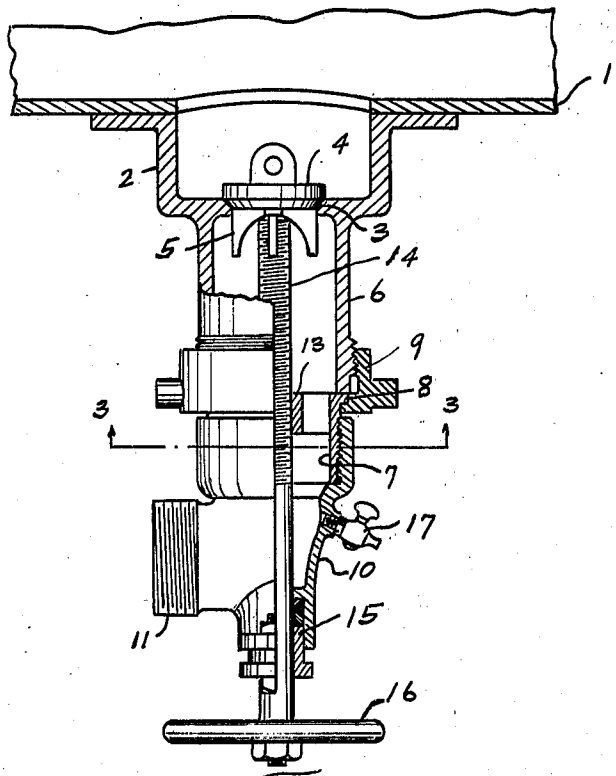

Fig. 2.

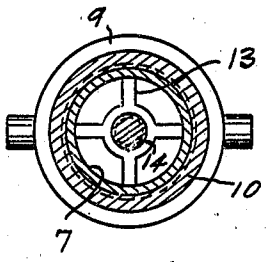

Fig. 3

INVENTOR.
John C. Garrott
BY
Hardway & Cathy
ATTORNEYS.

Patented Oct. 2, 1928. 1,686,152

UNITED STATES PATENT OFFICE.

JOHN C. GARROTT, OF HOUSTON, TEXAS.

VALVE LIFTER.

Application filed December 20, 1926. Serial No. 155,863.

This invention relates to new and useful improvements in a valve lifter.

One object of the invention is to provide a valve lifter of the character described specially designed for connection to the bottom of a tank car and provided for the purpose of lifting the outlet valve of said car when it is desired to empty the car.

Another object of the invention is to provide, in combination with said valve lifter, an outlet connection which is mounted to swivel and to which the outlet hose, through which the car is emptied, may be connected.

With the above and other objects in view the invention has particular relation to certain novel features of construction, operation and arrangement of parts, an example of which is given in this specification and illustrated in the accompanying drawings, wherein:—

Figure 1 shows a side elevation of a tank car with the valve lifter applied thereto.

Figure 2 shows an enlarged side elevation of the lifter, partly in section, and

Figure 3 shows a cross sectional view thereof, taken on the line 3—3 of Figure 2.

Referring now more particularly to the drawings, wherein like numerals of reference designate similar parts in each of the figures, the numeral 1 designates a tank car of conventional construction. Fastened to, and depending from the bottom of this car there is a valve casing 2 having the downwardly converging outlet valve seat 3 normally closed by the upwardly opening valve 4 having the depending guides 5 which work through said seat and hold the valve central relative thereto. Depending from, and formed integrally with the valve casing 2 there is a tubular neck 6. There is a swiveling nipple 7 whose upper end has an external flange 8 which abuts the lower end of the neck 6, said nipple being retained in place by means of the clamp nut 9 which engages the flange 8. There is a hose connection 10 whose upper end is threaded on to the nipple 7 and whose lower end is laterally turned and outwardly threaded, as at 11, thus forming a connection for the outlet hose 12. The nipple 7 has the internal spiders 13, having a central tapped hole through which the externally threaded valve lift rod 14 is threaded. The outer end of this lift rod works through the stuffing box 15, carried by the outer end of the hose connection 10 and fixed on said outer end is a hand wheel 16, by means of which the lift rod 14 may be turned. When it is desired to empty the car the rod 14 may be screwed upwardly against the valve 4 and it will lift the same to permit the oil to drain out and when said rod 14 is turned in the other direction it will permit the valve 4 to seat.

It is important that the hose connection 10 be mounted to swivel and it may thus be readily turned to a convenient position for connecting the hose 12 thereto and furthermore it readily permits said hose 12 to be swung around into any desired position for unloading. Said connection 10 also has a suitable drain cock 17, through which samples of the oil may be taken for testing purposes.

What I claim is:

1. A device of the character described including a valve casing having a reduced tubular depending neck, a web separating said casing and neck having an opening therein and a valve seat surrounding said opening, an upwardly opening valve in the casing controlling said opening, a hose connection depending from and having a swiveling connection with said neck, a valve lifting rod extending through said connection and neck and aligned underneath the valve and a spider in said connection having a tapped bearing through which said rod is threaded.

2. A device of the character described including a valve casing having an opening surrounded by a downwardly converging valve seat and a tubular depending neck, an upwardly opening valve controlling said opening, a spider having a tapped bearing, a valve lifting rod threaded through said bearing and aligned underneath said valve, a hose connection, a nipple threaded into said connection and having a swiveling connection with said neck, said spider being anchored in said nipple.

3. A device of the character described including an enlarged valve casing having an opening and a valve seat surrounding said opening and a reduced tubular depending neck, an upwardly opening valve within said casing and controlling said opening, a nipple having a swiveling connection with said neck, a spider in said nipple having a tapped bearing, a valve lifting rod threaded through said bearing and aligned underneath said

valve, a hose connection connected to said nipple and a drain cock carried by said connection.

4. The combination with a tank car having a bottom opening, of a valve casing secured to the bottom of the car around said opening, the bottom of said casing being formed with an opening having a downwardly converging valve seat, a reduced tubular neck depending from said casing, an upwardly opening valve in the casing controlling said opening, a tubular nipple having a swiveling connection with the lower end of said neck, a spider in said nipple having a central tapped bearing, a tubular hose connection threaded to said nipple and whose lower end is laterally turned and outwardly threaded, a stuffing box at the lower end of said connection, a valve lifting rod fitted through said stuffing box and threaded through the spider bearing, and whose upper end is aligned underneath said valve and means carried by the lower end of said rod for turning the same.

In testimony whereof I have signed my name to this specification.

JOHN C. GARROTT.