US 20060266627A1

(19) United States

(12) Patent Application Publication

(10) Pub. No.: US 2006/0266627 A1

(43) Pub. Date: Nov. 30, 2006

Krisl

(54) ROD RETAINING SNAP ROD WITH ENLARGED RETAINING RING

(76) Inventor: **Michal Krisl**, Muttenz (CH)

Correspondence Address:
HODGSON RUSS LLP
ONE M & T PLAZA
SUITE 2000
BUFFALO, NY 14203-2391 (US)

(21) Appl. No.: 11/499,409

(22) Filed: Aug. 4, 2006

Related U.S. Application Data

(63) Continuation of application No. 10/891,807, filed on Jul. 15, 2004, now Pat. No. 7,108,127.

(60) Provisional application No. 60/489,824, filed on Jul. 24, 2003.

Publication Classification

(51) Int. Cl.
B65G 17/38 (2006.01)

(52) U.S. Cl. 198/853

(57) **ABSTRACT**

A modular belt having a first belt module and a second belt module intercalated and locked into position by a pivot rod having a head at one end and a retaining ring disposed in spaced apart relation relative to the head along the longitudinal axis.

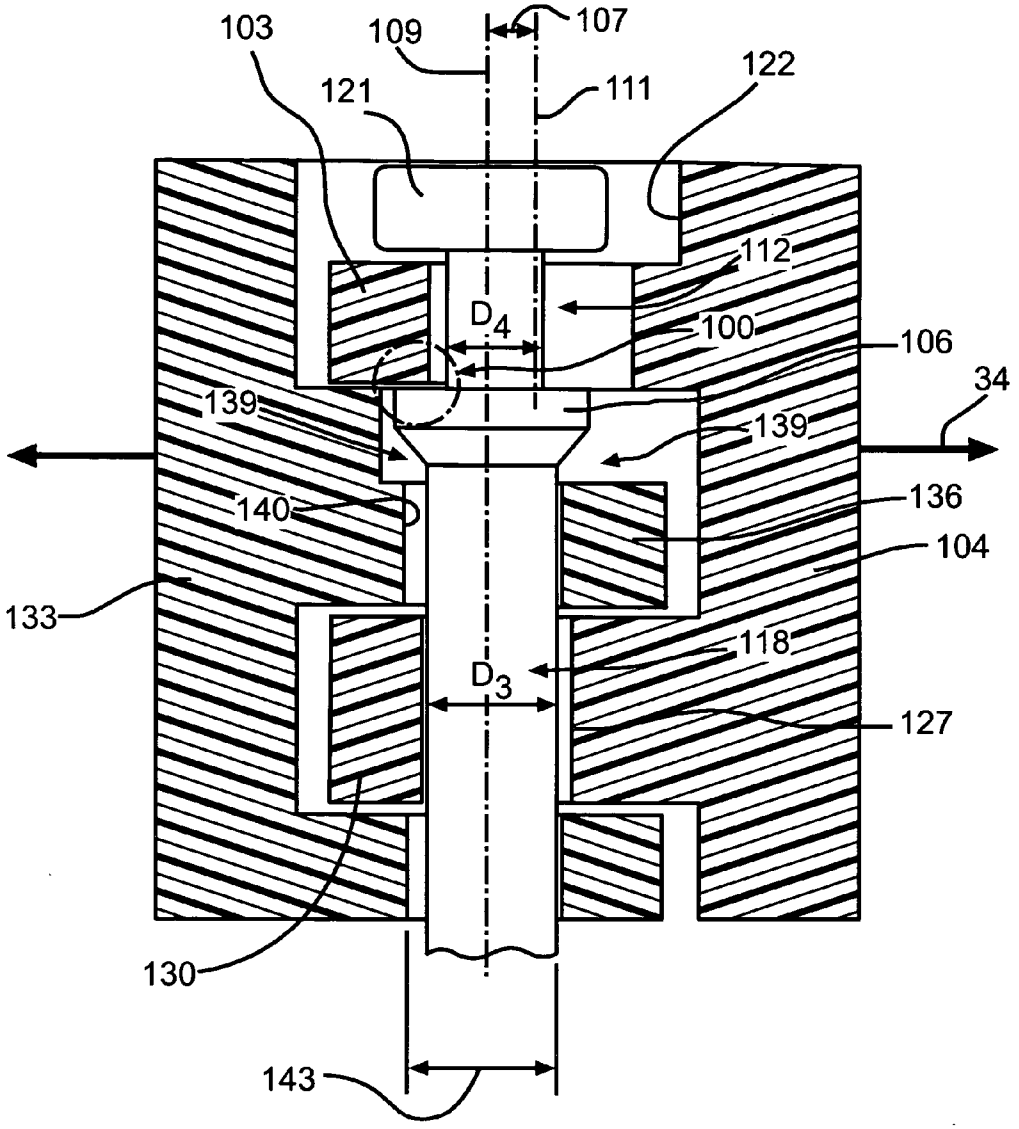

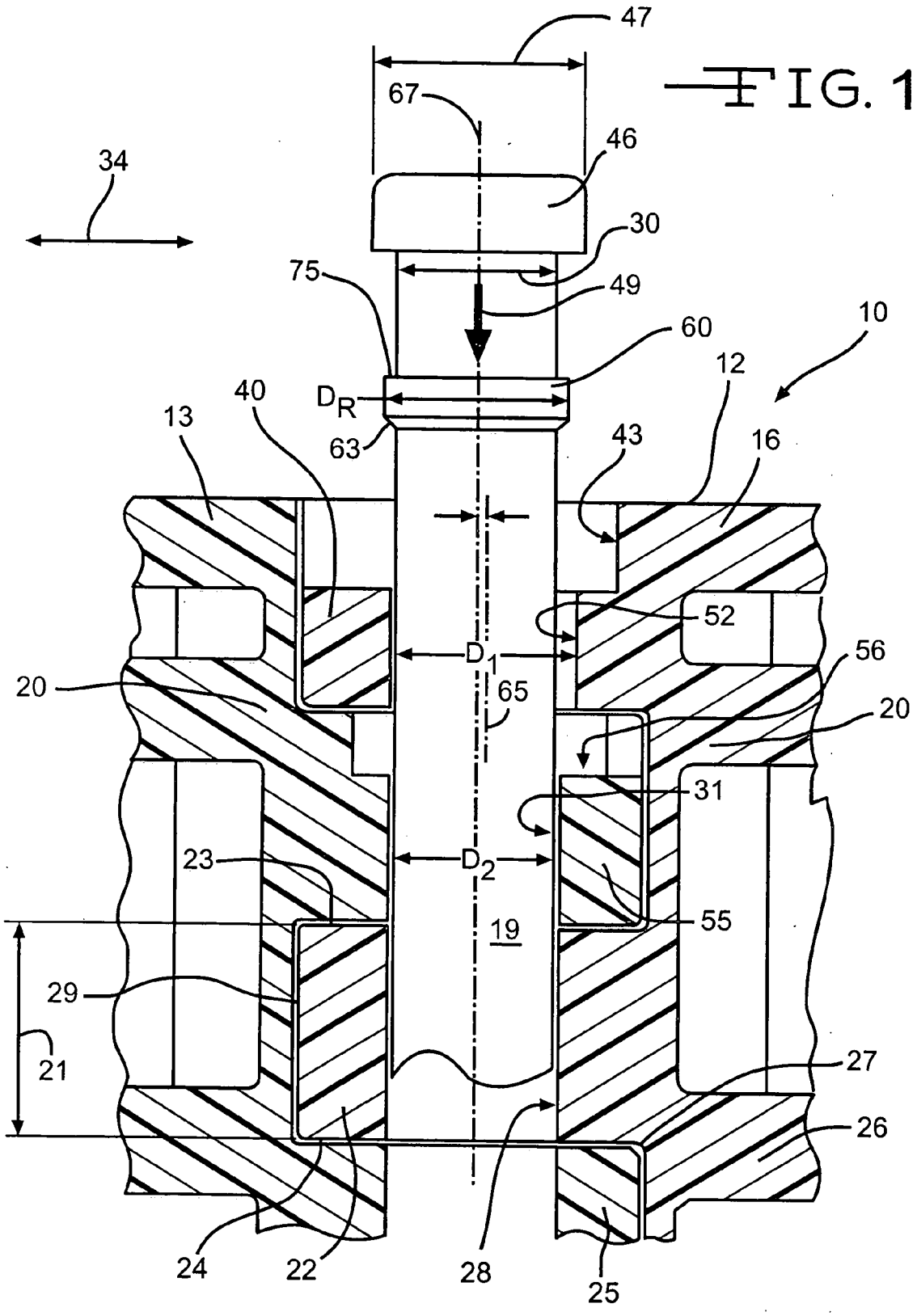
47
67
46
34
30
75
49
60
10
12
40
D_R
13
63
43
16
52
D_1
56
20
65
20
31
23
D_2
55
19
29
21
27
26
24
22
28
25

FIG. 1

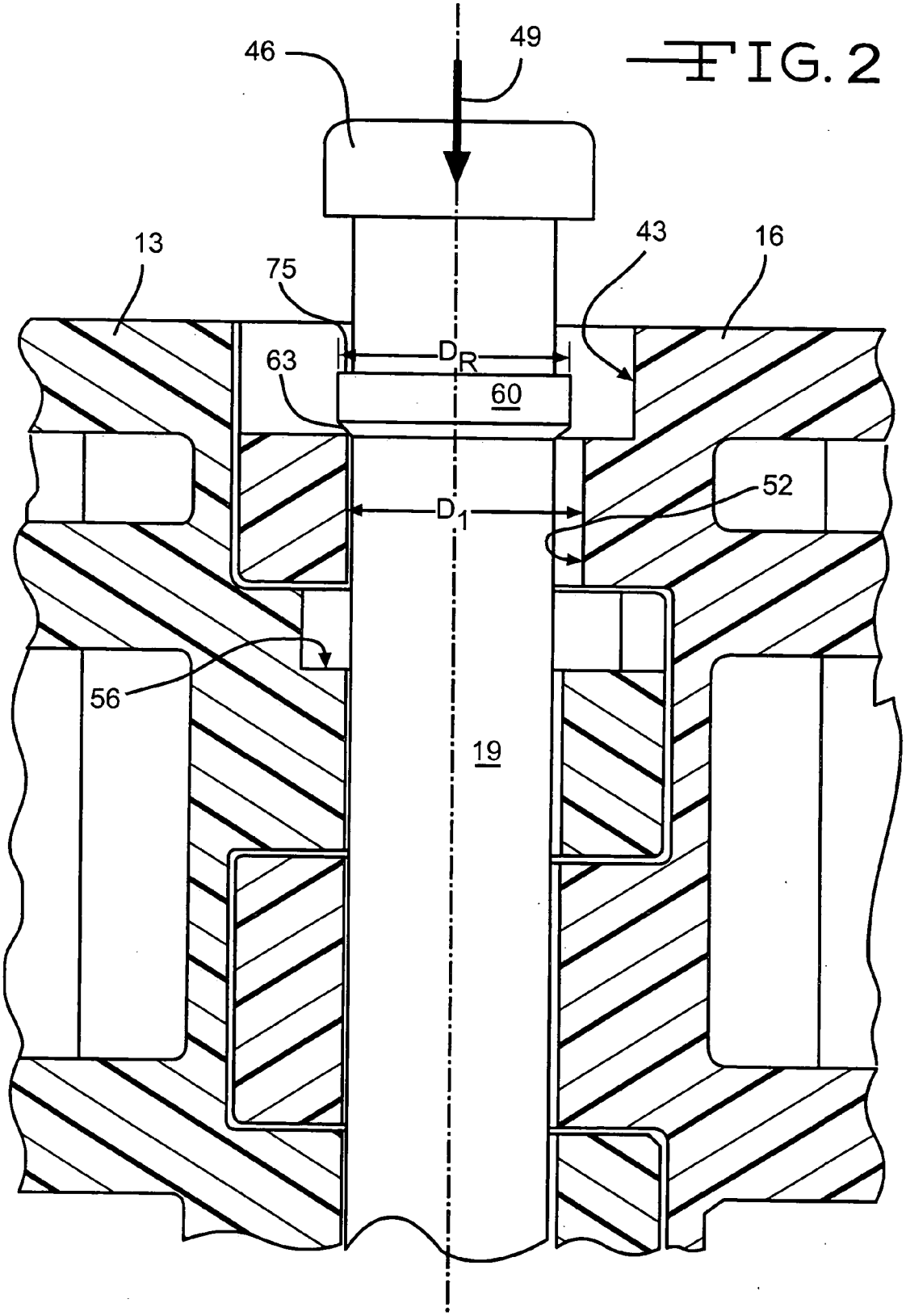

FIG. 2

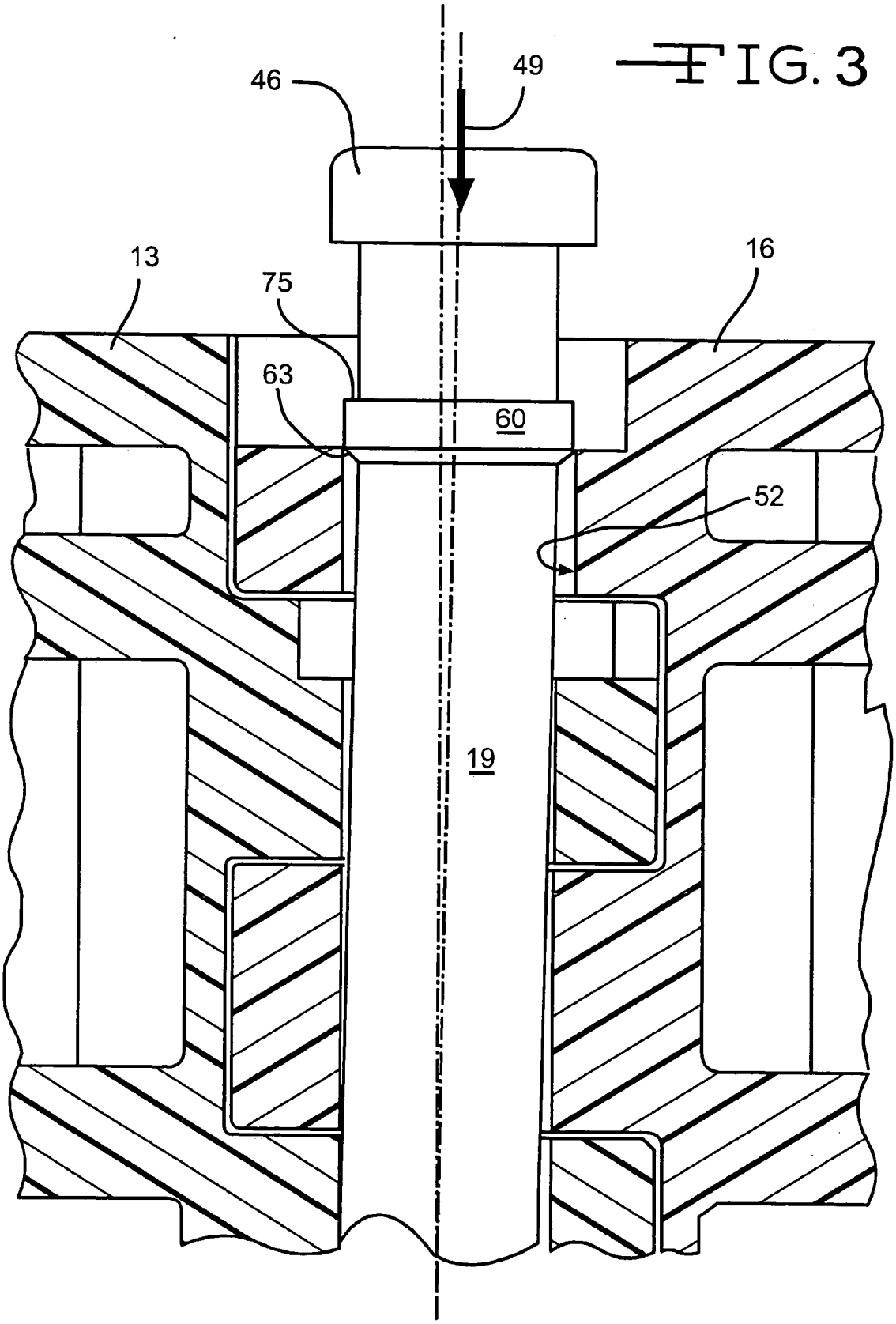

FIG. 3

FIG. 4

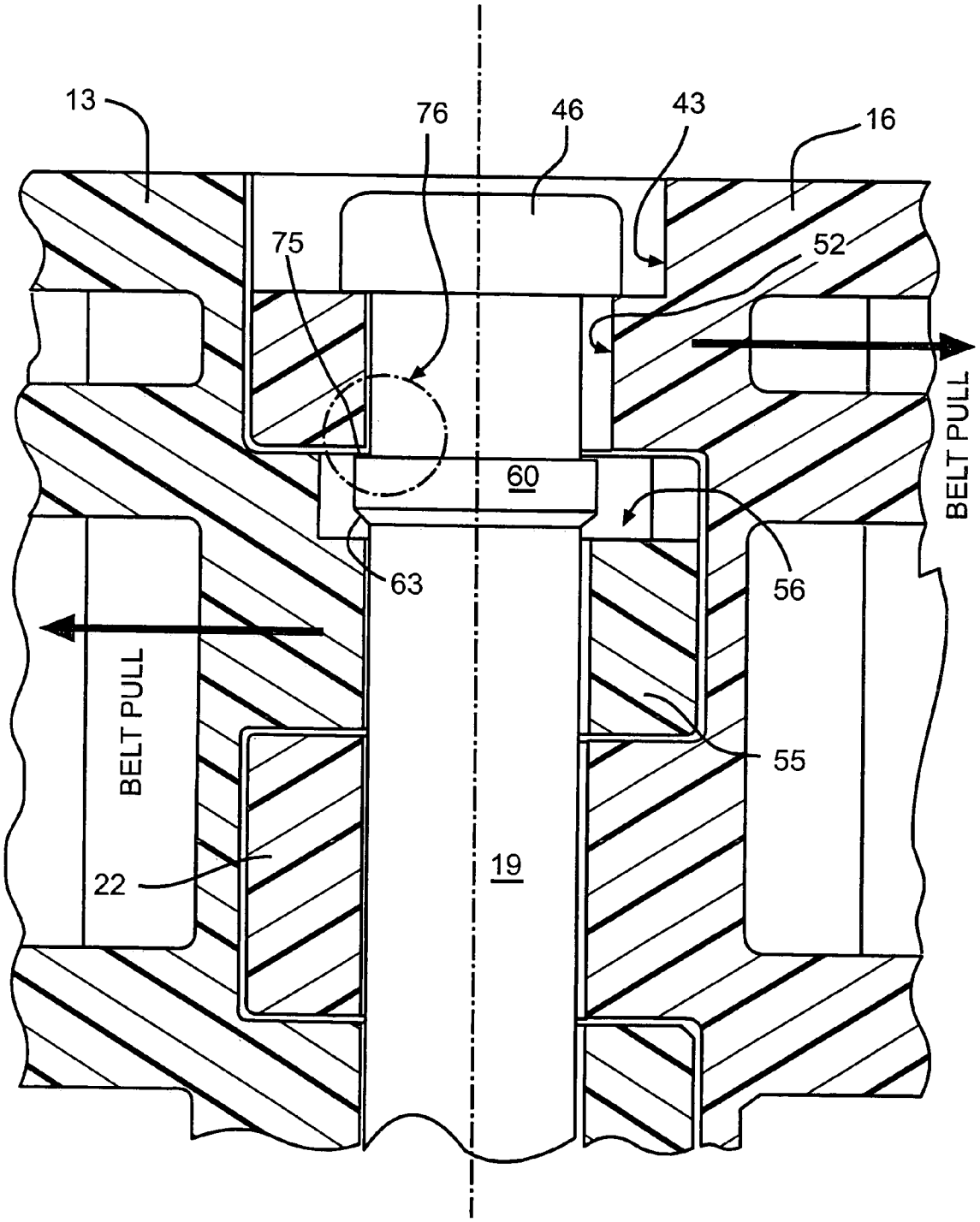

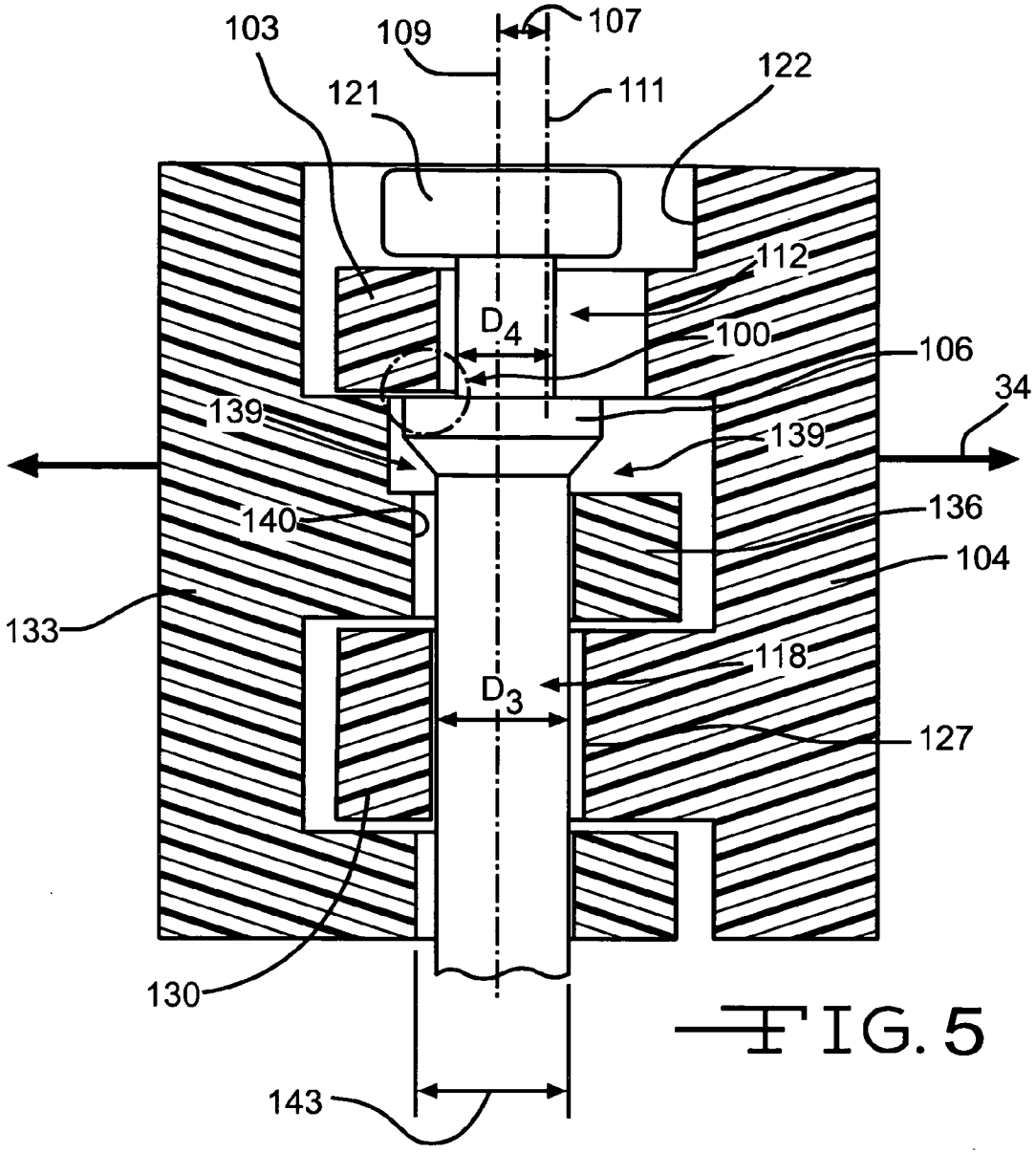
103
109
107
121
111
122
112
D_4
100
106
34
139
139
140
136
104
133
118
D_3
127
130
143

FIG. 5

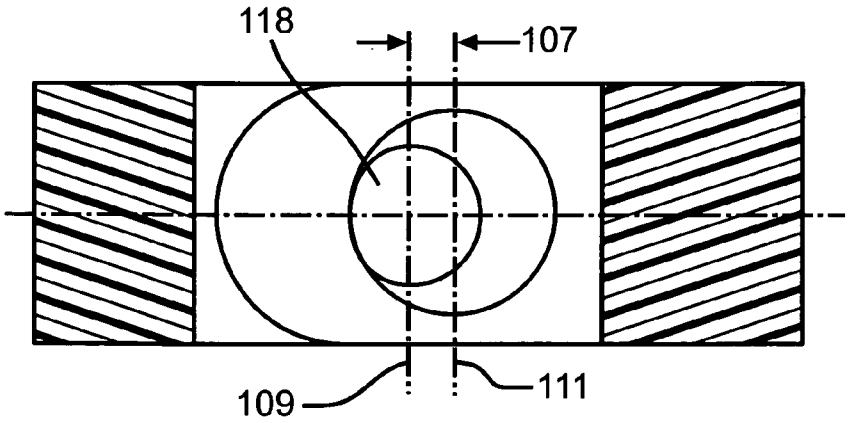
118
107
109
111

FIG. 6

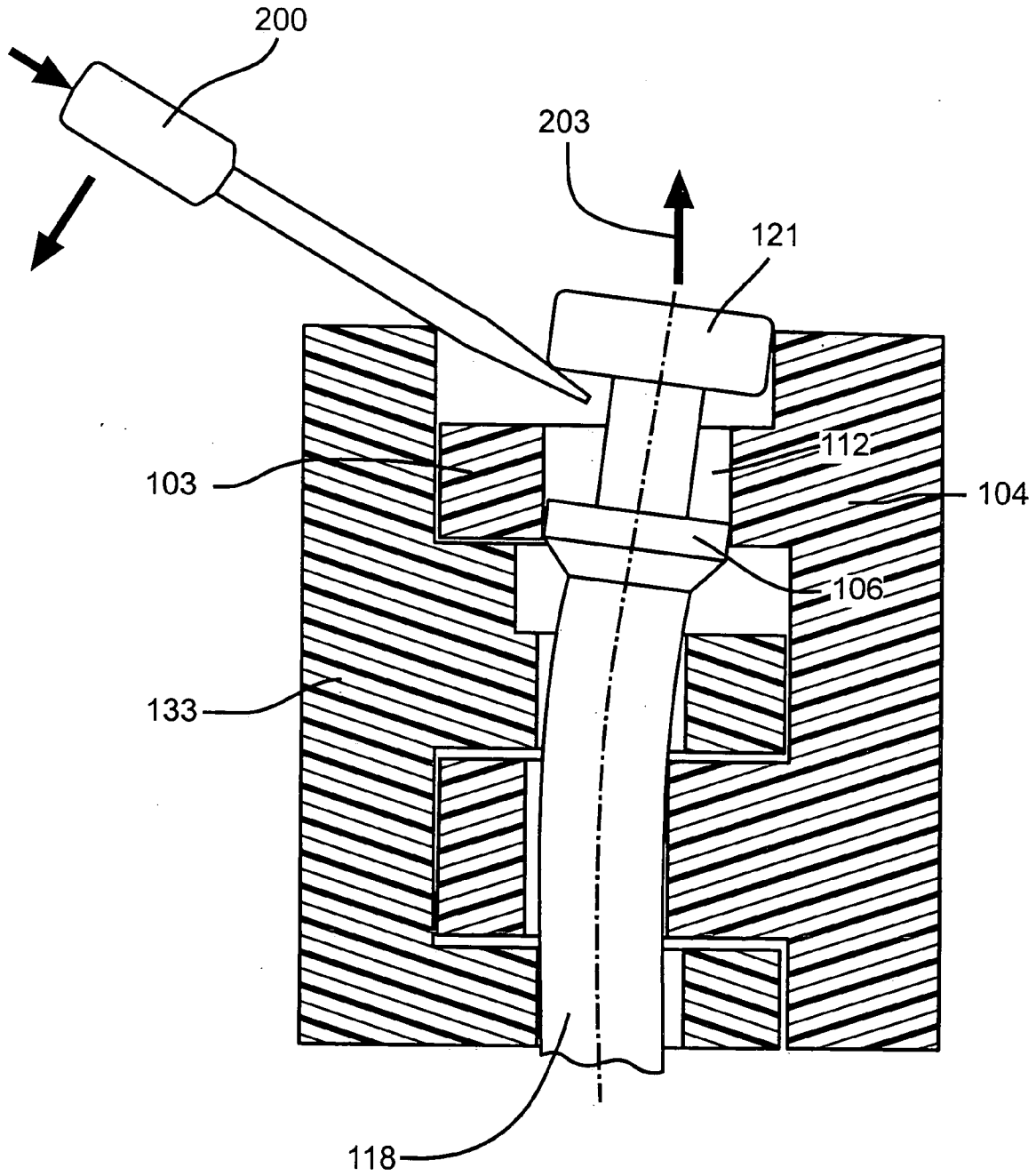

FIG. 7

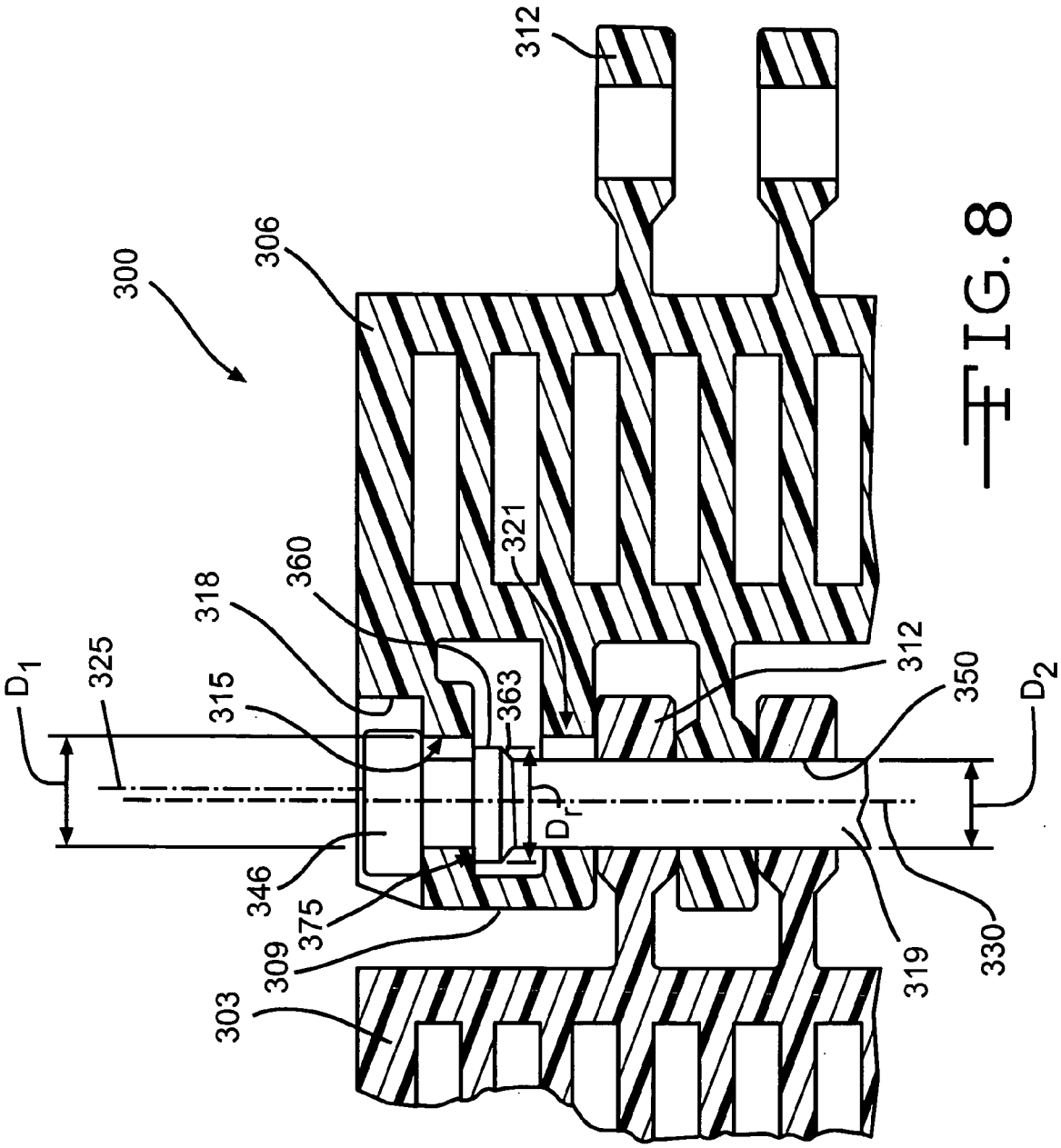
300
306
312
321
360
318
315
325
D_1
363
D_r
346
375
309
303
312
350
D_2
319
330

FIG. 8

ROD RETAINING SNAP ROD WITH ENLARGED RETAINING RING

CROSS-REFERENCE TO RELATED APPLICATION

[0001] The present application is a continuation of U.S. patent application Ser. No. 10/891,807 filed on Jul. 15, 2004 which claims priority to U.S. Provisional Patent Application No. 60/489,824 filed Jul. 24, 2003, entitled "Rod Retaining Snap Rod with Enlarged Retaining Ring," which is incorporated herein by reference.

FIELD OF INVENTION

[0002] The present invention relates to modular conveying apparatus.

BACKGROUND OF THE INVENTION

[0003] Because they do not corrode, are light weight, and are easy to clean, unlike metal conveyor belts, plastic conveyor belts are used widely, especially in materials handling and conveying food products. Modular plastic conveyor belts are made up of molded plastic modular links, or belt modules, that can be arranged side by side in rows of selectable width. A series of spaced apart link ends extending from each side of the modules include aligned apertures to accommodate a pivot rod. The link ends along one end of a row of modules are interconnected with link ends of an adjacent row. A pivot rod journaled in the aligned apertures of the side-by-side and end-to-end connected modules forms a hinge between adjacent rows. Rows of belt modules are then connected together to form an endless conveyor belt capable of articulating about a drive sprocket.

[0004] The retention of the pivot rod is an important feature of the modular plastic conveyor belts. Rod retention can be accomplished by enlarging the heads of the pivot rods at both ends but such would not allow for disassembly without destroying the rod head. Headless rods have been used for easier production and belt assembly. These type of rods must be blocked at both ends of the belt during use. In addition headless rods are often difficult to remove for disassembly.

[0005] One approach to rod retention is to have a head at one end of a rod and a headless section at the opposite end. The headed rod is furnished with a rod retaining ring disposed on the shaft at a distance from the head portion of the rod. The rod is inserted through the pivot holes of the module links, which are all exactly the same diameter. The retaining ring is just a little bit larger in diameter than the pivot hole of the outermost link, such that the ring may be forced through the pivot hole of the outermost link end and is able to expand behind the link. In this arrangement the rod is kept firmly in position by the retaining ring. The system described above has the drawback that it requires tight tolerances of the hole diameter of the outermost link and the retaining ring diameter. In practice, there is a risk that the rod does not retain well enough or is retained tightly and cannot be easily disassembled. In addition, if the retaining ring is a little too large, it may be sheared off when inserted.

[0006] What is needed is a device that makes the above-described tolerances less critical.

SUMMARY OF THE INVENTION

[0007] The present invention meets the above-described need by providing a snap rod system such that the retaining ring can be made larger in order to increase the size of the shoulder which engages behind the link face. At the same time due to the larger ring diameter the bore of the outermost link needs to be enlarged accordingly in order to allow the larger retaining ring to be moved through the bore. Due to the larger difference between the retaining ring and the rod diameter, the tolerance becomes less critical. In one embodiment, the bore of the outermost link end is slightly eccentric in such a way that the enlarged shoulder of the retaining ring will be clearly overlapping the link face when assembled. When the belt is under tension the rod will be firmly forced into this retaining position, without losing the ability to transmit the belt pull.

BRIEF DESCRIPTION OF THE DRAWINGS

[0008] **FIG. 1** is a cross-sectional plan view of the belt and pivot rod of the present invention with the pivot rod extending from the end of the belt prior to installation;

[0009] **FIG. 2** is a cross-section plan view of the belt and pivot rod of **FIG. 1** during the initial stage of installation of the pivot rod;

[0010] **FIG. 3** is a cross-sectional plan view of the belt and pivot rod during a later stage of installation;

[0011] **FIG. 4** is a cross-sectional plan view of the belt and pivot rod of **FIG. 1** shown in the installed configuration;

[0012] **FIG. 5** is a cross-sectional view of the belt and pivot rod of an alternate embodiment of the present invention shown in the installed configuration;

[0013] **FIG. 6** is an end view of the belt with the pivot rod removed for clarity;

[0014] **FIG. 7** is a cross-sectional view of the belt shown in **FIG. 5** during removal of the pivot rod with a screw driver; and,

[0015] **FIG. 8** is a cross-sectional plan view of an alternate embodiment of the present invention.

DETAILED DESCRIPTION OF THE INVENTION

[0016] In **FIGS. 1-4**, a modular belt **10** is formed from a plurality of belt modules as will be evident to those of ordinary skill in the art. In **FIG. 1**, the outermost modules **13**, **16** are shown. As will be evident to those of ordinary skill in the art, the belt **10** may be formed into varying widths in bricklayed fashion in a direction perpendicular to the direction of belt travel **34**.

[0017] Each module **13**, **16** has a module body **20** with a first and second plurality of link ends **22**, **25** disposed in the middle of the module with respect to the outer edge **12** shown at the top of **FIG. 1**. Each link end **22**,

[0018] has opposed side walls **23**, **24** defining a first transverse thickness **21**. The first transverse thickness **21** is connected to the intermediate section **26** of the module body **20** at a first proximal portion **27**. The transverse thickness extends from the intermediate section **26** in a direction of belt travel to a first distal portion **29**.

[0019] The link ends **22**, **25** include openings **28**, **31** disposed transverse to the direction of belt travel **34**. The

openings **28** and **31** receive the pivot rod **19** when adjacent belt modules **13**, **16** are intercalated as shown in the figure.

[**0020**] The pivot rod **19** is typically round and has a diameter **30** such that the modules **13**, **16** are capable of pivoting relative to each other for articulating about a sprocket (not shown). The pivot rod **19** has an end portion **46** with a diameter **47** that is greater than the diameter **30** of the pivot rod **19**. The pivot rod **19** also includes a retaining ring **60** spaced apart longitudinally from the end portion **46**. The retaining ring **60** has a diameter Dr that is larger than the diameter of the pivot rod **19** and may be formed with a chamfered or beveled edge **63**.

[**0021**] Outermost link end **40** of module **16** is disposed toward the edge **12** of belt **10**. The outermost link end

[**0022**] has a recessed portion **43** that is capable of receiving end portion **46** of pivot rod **19**. When the pivot rod **19** is installed in the belt **10** in the direction indicated by arrow **49**, the end portion **46** is received in the recessed portion **43** and abuts with the portion of the link end surrounding aperture **52** as shown in **FIG. 4**.

[**0023**] Link end **40** has an opening **52** with a diameter D_1 that is approximately equal to or slightly smaller than the diameter D_r of the ring **60** but is larger than the diameter D_2 of openings **28**, **31**.

[**0024**] Belt module **13** also has a specially formed outermost link end **55** having a recessed surface **56**.

[**0025**] The central longitudinal axis **65** of aperture **52** is offset from the central longitudinal axis **67** of openings **28**, **31** such that upon insertion; the pivot rod **19** is bent as shown in **FIG. 3**. The pivot rod **19** is bent during insertion such that once the ring **60** clears aperture **52**, the enlarged shoulder **75** overlaps the link face surrounding aperture **52** as shown in the circled area **76** in **FIG. 4**. The axial misalignment between the apertures **52** and **31** ensures that the ring **60** does not exit from the aligned modules **13** and **16** after installation.

[**0026**] **FIGS. 2-4** illustrate the position of the pivot rod **19** and the modules **13** and **16** during various stages of the installation of the pivot rod **19**. In **FIG. 2**, the pivot rod **19** is shown at the maximum insertion point prior to bending the body or shaft of the pivot rod **19**. The rod **19** has been inserted in the direction of arrow **49** until the beveled edge **63** of the retaining ring **60** engages with the edge of the opening **52** on the left hand side of the figure.

[**0027**] Turning to **FIG. 3**, deflection of the pivot rod **19** to the right side of opening **52** causes the pivot rod **19** to bend such that the retaining ring **60** aligns with the opening **52**. The retaining ring **60** is sized to frictionally engage with the inside walls of opening **52** during insertion. Accordingly, the retaining ring may be roughly equal to or slightly larger in diameter Dr than the inside diameter D_1 of opening **52**. As shown, the left hand side of the beveled edge **63** clears the opening in **FIG. 3** so that the retaining ring **60** may be passed through the opening **52**.

[**0028**] In **FIG. 4**, the pivot rod **19** has been inserted such that the retaining ring **60** has passed all the way through opening **52** and has "snapped" back to the left in the area shown in circle **76**. Once the left edge of the retaining ring **60** clears the end of the opening **52**, the pivot rod **19** returns to its straight configuration. In this position, the belt modules **13**, **16** are intercalated and locked together by the retaining ring **60**.

[**0029**] Turning to **FIG. 5**, an alternate embodiment of the modular belt of the present invention is shown. The overlapping area **100** located between the outermost link end **103** on the first belt module **104** and the rod retaining ring **106** defines the locking behavior of the snap rod. The offset **107** between the pivot rod center axis **109** and the central axis **111** of opening **112** in the outermost link end **103** for the retaining ring **106** is a parameter that affects the locking behavior. This offset **107** can be increased by reducing the diameter D_4 of the rod **118** between the head **121** and the retaining ring **106**. The outermost link end **103** has a recessed portion **122** that receives the head **121**. The opening **112** in the outermost link end **103** is larger than the openings **127** in the plurality of link ends **130**.

[**0030**] The second belt module **133** also has an outermost link end **136** having a recessed portion **139**. The recessed portion **139** in the second belt module **133** receives the retaining ring **106** when the first and second belt modules **104**, **133** are intercalated and connected by the pivot rod **118**. The outermost link end **136** on the second belt module **133** has a pivot rod opening **140** with a diameter **143** that is approximately equal to the diameter of the openings **127** in the first belt module **104**.

[**0031**] In **FIG. 6**, the offset **107** is shown from an end view of the intercalated belt modules. The pivot rod axis **109** and the central axis **111** of the opening **112** are shown.

[**0032**] As shown in **FIG. 7**, the pivot rod **118** may be removed by use of a screw driver **200**. The screw driver **200** may be inserted under the head **121** of the pivot rod **118** to provide leverage for bending the rod **118** to align it with the opening **112** in the outermost link end **103** in the first module **104**. Once the retaining ring **106** is aligned with the opening **112** the pivot rod **118** may be removed by sliding it outward in the direction indicated by arrow **203**.

[**0033**] Turning to **FIG. 8**, an alternate embodiment of the present invention is shown. A belt **300** is formed from modules **303** and **306**. The modules have outer link ends **309**, **312**. Link end **309** on module **306** has extra width to accommodate an internal opening **315** for receiving retaining ring **360** on pivot rod **319**. Link end **312** on module **303** intercalates adjacent to link end **309** as shown. The link end **309** also includes a recessed portion **318** for receiving end portion **346** of pivot rod **319**.

[**0034**] Link end **309** also includes an opening **321** having the same diameter as opening **315**. Openings **315** and **321** have a diameter D_1 that is approximately equal to or smaller than the diameter D_r of ring **360**. The link end **312** and the link ends disposed toward the middle of the belt have openings with a Diameter D_2 that is smaller than D_1. The longitudinal axis **325** of openings **315** and **321** is offset from the longitudinal axis **330** of the opening in link end **312** and the openings toward the middle of the belt module.

[**0035**] Accordingly, during insertion of the pivot rod **319**, the pivot rod **319** has to be bent and once the ring **360** clears the opening **315** it shifts to the left with respect to **FIG. 8** such that shoulder **375** engages the link surface around opening **315**.

[0036] The embodiment of **FIG. 8** may also be provided with a pivot rod **118** (**FIG. 5**) having different diameters located above and below the retaining ring **106**. In the example shown, the diameter of the rod between the retaining ring and the head is smaller than the diameter of the rod between the retaining ring and the second end of the rod.

[0037] While the invention has been described in connection with certain embodiments, it is not intended to limit the scope of the invention to the particular forms set forth, but, on the contrary, it is intended to cover such alternatives, modifications, and equivalents as may be included within the spirit and scope of the invention as defined by the appended claims.

1-13. (canceled)

14. An assembly for hingedly coupling parts of a conveyor, comprising a first conveyor part provided with a first row of hinge eyes spaced apart from one another with mutual interspaces with an end hinge eye located along a longitudinal edge of the conveyor part, with an end hinge hole which is somewhat out of alignment with respect to an adjacent hinge hole from the first row, further comprising a second conveyor part provided with a second row of hinge eyes which are also spaced apart from one another with mutual interspaces, such that the conveyor parts can cooperate in a coupled condition by receiving hinge eyes in corresponding interspaces, and a hinge pin provided with a central body part which extends, in coupled condition of the assembly, through hinge holes of the first row and of the second row, further provided with a thickened head which is able to pass the end hinge hole of the end hinge eye, but not the hinge hole of the next hinge eye in coupled condition, which thickened head is, in coupled condition, axially locked between the end hinge eye and the next hinge eye, while the thickened head bears a projection which reaches into the hinge hole of end hinge eye in coupled condition.

15. An assembly according to claim 14, wherein the first row comprises a sub-row with more centrally located hinge eyes with hinge holes aligned with respect to one another and an end hinge eye adjacent to the sub-row, with an enlarged hinge hole which is positioned somewhat out of alignment and with a locking surface adjacent to the hinge hole and positioned in alignment.

16. An assembly according to claim 14, wherein the hinge eyes of the hinge holes of the second row are provided with hinge holes aligned with respect to one another.

17. An assembly according to claim 14, wherein, with the aid of its thickened head, the hinge pin is axially locked between a locking surface of the end hinge eye on the one side and the next hinge eye on the other side.

18. An assembly according to claim 14, wherein the projection is substantially cylindrical.

19. An assembly according to claim 14, wherein the projection has substantially the same diameter as the body part of the pin.

20. An assembly according to claim 14, wherein the projection extends collinear with the central part of the pin.

21. An assembly according to claim 14, wherein the hinge pin is rotationally symmetrical.

22. An assembly according to claim 14, wherein the pin extends over the width of the conveyor.

23. An assembly according to claim 14, wherein the thickened head tapers from the projection towards the central part.

24. An assembly according to claim 14, wherein the cooperating conveyor parts form a substantially closed conveying surface.

25. An assembly according to claim 14, wherein the end hinge eye is partly reduced, so that the locking surface surrounds the hinge hole as a ring segment.

26. An assembly according to claim 14, wherein the end hinge eye is designed as a stop cam bearing the locking surface and reaching outwards with respect to the body part, leaving a space corresponding with the hinge hole clear.

27. A hinge pin for coupling conveyor parts, comprising a substantially elongated central body part with a thickened head, wherein the thickened head bears a narrowed projection.

28. A hinge pin according to claim 27, wherein the central body part is substantially cylindrical.

29. A hinge pin according to claim 27, wherein the projection is substantially cylindrical.

30. A hinge pin according to claim 27, wherein the projection extends collinear with the central body part of the pin.

31. A hinge pin according to claim 27, wherein the pin is substantially rotationally symmetrical.

32. A hinge pin according to claim 27, wherein the head tapers from the projection towards the central part.

33. A modular belt, comprising:

a first belt module having a first plurality of link ends, the first plurality of link ends disposed in spaced apart relation with spaces therebetween, the first plurality of link ends including an outermost link end disposed at an edge of the module, the outermost link end having a first transverse opening that is somewhat out of alignment with respect to an adjacent second transverse opening in the first plurality of link ends;

a second plurality of link ends disposed in spaced apart relation with spaces therebetween such that the first plurality of link ends fit into the spaces between the second plurality of link ends when adjacent modules are connected;

a pivot rod having a first end and a second end and having a retaining ring disposed in spaced apart relation to the first end, the pivot rod extending through transverse openings in the first plurality of link ends and the second plurality of link ends of an adjacent module, the retaining ring being capable of passing through the first transverse opening in the outermost link end but not the remaining transverse openings, the retaining ring being, in coupled condition, axially locked between the outermost link end and the adjacent link end, while the first end of the pivot rod reaches into the first transverse opening in the outermost link end.

34. The modular belt of claim 33, wherein the first plurality of link ends comprises a sub-row with more centrally located link ends with transverse openings aligned with respect to one another, the outermost link end adjacent to the sub-row, the outermost link end having an enlarged first transverse opening that is positioned somewhat out of alignment and with a locking surface adjacent to the first transverse opening and positioned in alignment.

35. The modular belt of claim 33, wherein the transverse openings in the second plurality of link ends are aligned with respect to one another.

36. The modular belt of claim 33, wherein with the aid of its retaining ring, the pivot rod is axially locked between a locking surface of the outermost link end on the one side and the adjacent link end on the other side.

37. The modular belt of claim 33, wherein the pivot rod is substantially cylindrical.

38. The modular belt of claim 33, wherein the pivot rod has a substantially uniform diameter on opposite sides of the retaining ring.

39. The modular belt of claim 33, wherein the first end of the pivot rod is collinear with the second end of the pivot rod.

40. The modular belt of claim 33, wherein the pivot rod is rotationally symmetrical.

41. The modular belt of claim 33, wherein the pivot rod extends over the width of the conveyor.

42. The modular belt of claim 33, wherein the retaining ring tapers toward a midportion of the pivot rod.

43. The modular belt of claim 33, wherein intercalating the first plurality of link ends with the second plurality of link ends on an adjacent module forms a substantially closed conveying surface.

44. The modular belt of claim 33, wherein the outermost link end is partly reduced, so that a locking surface surrounds the first transverse opening as a ring segment.

45. The modular belt of claim 33, wherein the outermost link end is designed as a stop cam bearing on a locking surface and reaching outwards with respect to the module, leaving a space corresponding with the transverse opening clear.

46. A pivot rod for coupling belt modules, the pivot rod comprising: a substantially elongated central body portion having a retaining ring, wherein the retaining ring bears a narrowed projection.

47. The pivot rod of claim 46, wherein the central body portion is substantially cylindrical.

48. The pivot rod of claim 46, wherein the projection is substantially cylindrical.

49. The pivot rod of claim 46, wherein the projection extends collinear with the central body portion.

50. The pivot rod of claim 46, wherein the pivot rod is substantially rotationally symmetrical.

51. The pivot rod of claim 46, wherein the retaining ring tapers from the projection towards the central body portion.

* * * * *