March 28, 1961 A. W. ANTHONY ET AL 2,976,796

CHIMNEY CAP

Filed Feb. 16, 1959

FIG. 1

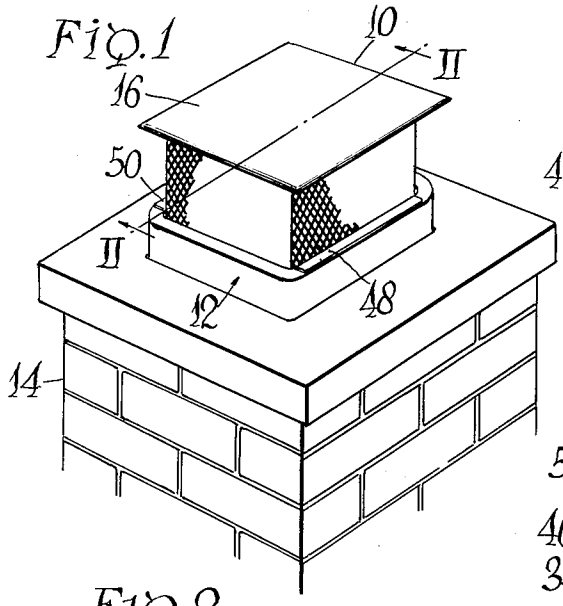

FIG. 4.

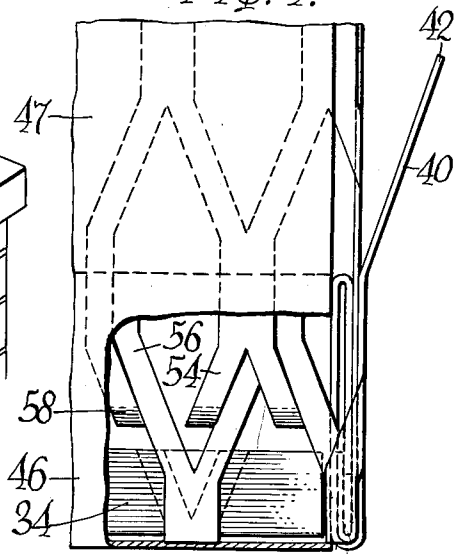

FIG. 2.

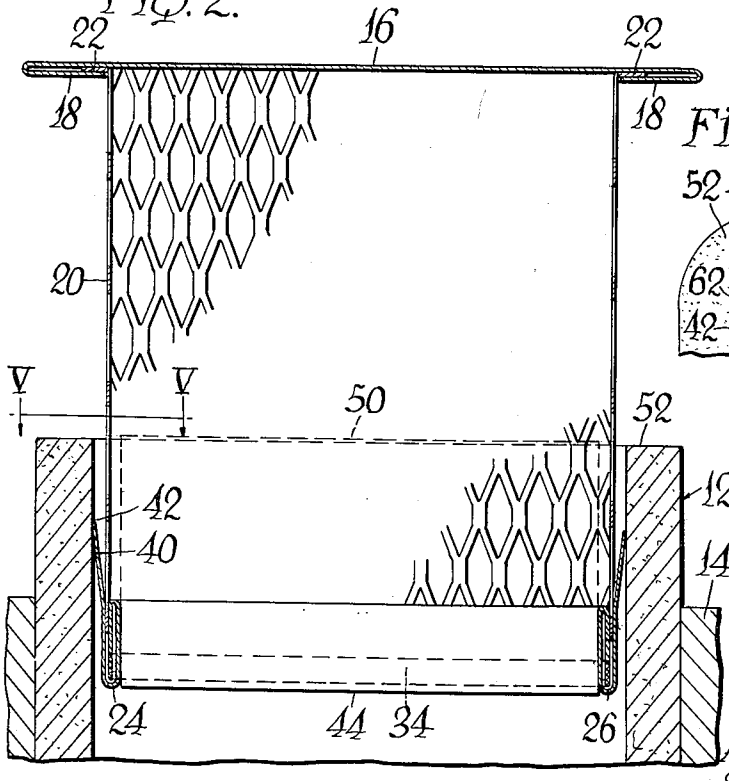

FIG. 5.

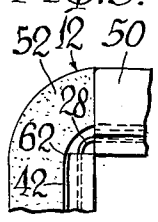

FIG. 3.

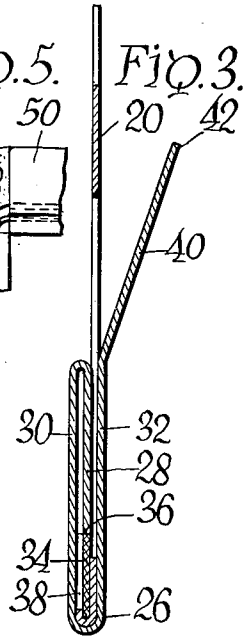

INVENTORS
Albert W. Anthony
& John G. Miller,
BY
Bean, Brooks, Buckley & Bean,
ATTORNEYS.

United States Patent Office

2,976,796

Patented Mar. 28, 1961

2,976,796

CHIMNEY CAP

Albert W. Anthony, 53 Fernhill Ave., Buffalo, N.Y., and John G. Miller, 1007 Quaker Road, East Aurora, N.Y.

Filed Feb. 16, 1959, Ser. No. 793,327

6 Claims. (Cl. 98—67)

This invention pertains to chimney caps, and more particularly to an improved chimney cap adapted to lock permanently on the chimney or the chimney flue to which it is applied automatically upon manual installation thereon.

As is well known in the art, chimney caps are often desired for a number of purposes, for example, to exclude birds, squirrels and the like from the chimney flue. Frequently, the building owner decides that a cap is needed at some time after construction of the chimney, and, therefore, there is a demand for caps adapted for application to previously completed chimney structures.

Since, by the nature and location of their use, chimney caps are subjected to strong forces such as wind, ice and the like tending to dislodge them, it is important that any practicable chimney cap have very secure attachment to the chimney to which it is applied. Heretofore, efforts in this direction have included provision of various unsightly and complicated bracket arrangements having straps which engage the outside of the chimney, and arrangements wherein mortar or other cement is built up on the chimney structure around parts of the cap device so as to lock the latter securely in place. Arrangements of this kind have obvious disadvantages in expense of manufacture, labor involved in installation, and unsightly result.

In accordance with the present invention, a chimney cap is provided which is extraordinarily simple in structure and therefore inexpensive to manufacture and yet is very rugged and embodies an unusually strong securement means operable automatically by and upon the simple act of manual insertion of the chimney cap into the chimney flue to attach the cap to the flue in a permanent manner. In the preferred embodiment of the invention the structure is unitary, so that the means for securing the cap on the chimney lends rigidity to the cap, and conversely, the rigidity of the cap strengthens the action of the securement means to yield an attachment to the chimney flue which, by actual test, has been shown to be very strong and permanent even though entirely automatic in its operation.

Accordingly, a major object of the invention is to provide an improved chimney cap.

Another object of the invention is to provide a chimney cap as aforesaid which embodies improved attachment means, operable automatically to secure the cap to the chimney to which it is applied.

Still another object of the invention is to provide a chimney cap structure as aforesaid which is very simple in construction and therefore inexpensive to manufacture, and yet is rugged and reliable in use.

Other objects of the invention will be apparent from the foregoing general discussion, the following detailed description, the claims, and from the drawing wherein:

Fig. 1 is a perspective view showing a preferred embodiment of the chimney cap of the present invention installed in a chimney flue;

Fig. 2 is a sectional view taken about along line II—II of Fig. 1;

Fig. 3 is an enlarged detail of a portion of Fig. 2 but showing a locking ear of the cap in its initial condition prior to installation in the chimney flue;

Fig. 4 is a fragmentary view, partly broken away, of one of the lower corners of the chimney cap shown in Fig. 1 but showing parts in their initial relation similarly to Fig. 3; and

Fig. 5 is a fragmentary sectional view taken about along line V—V of Fig. 2.

Referring more particularly to the drawings, the chimney cap 10 illustrated therein is of a type particularly adapted to prevent entry of birds, squirrels and the like into the flue 12 of the chimney 14 to which it is attached. In the illustrated embodiment of the invention the cap comprises a top or cover portion 16 of solid sheet form for strength, weather protection and also for tending to prevent down drafts into the chimney. The cover 16 is attached by returned flange portions 18—18 on its periphery to side walls 20 which are apertured for escape of flue gases from the chimney but which define a barrier for preventing undesired entry of animals thereinto. In the illustrated structure, the apertured or open-work side walls 20 comprise a single sheet of expanded metal, such as expanded aluminum which has been formed into rectangular configuration, the upper end portion being split at the corners and turned out to form anchor flanges or tabs 22—22 clamped to the cover 16 by the returned clamp flanges 18—18 thereof, as shown.

As seen best in Figs. 2 and 3, the lower edge portions of two sides of the chimney cap are provided with rigidizing means 24, 26 each comprising a sheet of metal which has been folded twice upon itself to provide a retainer fold 28 and inner and outer body portions 30, 32 which embrace the retainer fold and the lower edge portions of the side walls 20. The lower edge portions of the walls 20 are each provided with a return bend portion which has its upper edge surface preferably in juxtaposition with the lower edge surface of said retainer fold 28 whereby the rigidifying means 24 and 26 will be locked in position. A separate solid spacer strip 34 is disposed between each of the return bend portions 38 and the adjacent side wall 20. Each of these spacer strips preferably rests in one of the folds between the return bend portions 38 and the bottom portion of the side wall having its upper edge surface 36 abutting the lower edge surface of the retaining fold 28. This arrangement is designed to give greater strength to each of the edges of the returned bend portions 38 of the side wall, since the material of each of the walls 20, being expanded metal, would otherwise tend to nest in upon itself and fail to present a distinct edge for abutment against the retainer fold 28.

Extending upwardly from the outer rim body strip 32, as an outwardly angularly disposed extension thereof, is a locking flange 40 ending in a sharp, barb-forming upper edge 42 which engages the interior surface of the flue tile 12 for retaining the chimney cap therein, as will be described in greater detail hereinafter.

Referring to Figs. 2 and 4, the lower edge portions of the remaining two side walls 20 are provided with rigidizing rim portions 44, 46 identical in construction and anchorage to the aforedescribed rigidifying means 24, 26, being retained on the lower edges of the adjacent walls 20 in the same manner by abutment of an inner retainer fold, identical to the fold 28, against the spacer strip 34, which strip 34 may be continuous about the four sides of the lower edge structure as indicated. However, in the case of the edge stiffening rim portions 44, 46 the outer body strip portions each carry as an exten-

sion thereof an upwardly directed co-planar stop plate 47 ending in an outwardly turned stop flange or ear 48, 50 disposed to rest on the top edge of the flue tile 12, as shown in Figs. 1 and 2.

Conveniently, the spacer strip 34 may be installed in the folds of the lower edge of the walls 20 before the latter is bent into the four sided configuration, and accordingly, in the construction shown the strip 34 is discontinuous at one corner of the chimney cap, as shown in Fig. 4. For retaining this corner in assembled relation, the expanded material of the wall 20 is lapped at that corner, the overlying portion 54 thereof being pressed against and into the underlying portion 56 by the associated rigidizing rim portion 46 clamped thereover. The character of the expanded metal provides friction between these overlying and underlying portions 54, 56 where they are clamped upon each other by the inner and outer folds of the rim portion 46, the ribbons of expanded metal being deformed as they are clamped together so as to interlock, as indicated at 58 in Fig. 4. In order to reduce the bulk of the overlapped portions of the walls 20, that is to taper its thickness as it terminates between the folds of the portion 46, as well as to provide clearance between the overlying part 54 of this lap and the spacer strip 34 for facilitating the interlocking condition referred to, it is preferred that the overlying part 54 of the wall 20 be notched or cut back at its lower extremity as shown. It should be noted that the lapped portions 54, 56 are positioned, preferably, to underlie one of the stop plates 47; this protects the edge of the overlying portion 54 from damage by contact with the chimney flue during installation of the cap.

As illustrated in the drawing it is preferred that the rigidizing means 24, 26 bearing the locking flanges 40 be the full width of the interior dimension of the cap, the clearance at the corners being accommodated by shortening of the other rigidizing rim portions 44, 46. Accordingly, the opposite ends of the anchoring rigidifying means 24 ,26 are supported securely by abutting relation with the inner folds of the companion rim portions 44, 46, and it will be noted further that the general rigidity of the structure is enhanced by the clamped overlying relation of the joint forming portions 54, 56 of the wall 20, and by the otherwise continuous nature of the wall 20 and of the spacer strip 34 carried thereby.

It has been found that rigidity in the structure is of great importance in securing reliable performance of the barb-like action of the locking flanges 40. It will be understood that the structure at the lower end portion of the chimney cap, as above described, not only provides locating stops which define the inward limit of motion of the cap relative to the chimney flue and oppositely directed automatically operable anchor means which prevent outward motion of the cap, but also rigidizes the walls of the cap for giving secure, essentially inflexible mounts to these parts.

In use, the chimney caps of the invention are manufactured in various equilateral and oblong rectangular sizes to fit standard flue tiles such as illustrated at 12 in Fig. 1, there being only a small clearance between the cap and the interior tile walls as best seen in Fig. 2. To apply the cap to the chimney it is necessary only to grasp the cap by the laterally extending edges of its top 16, insert the lower end of the cap into the flue opening and press the cap downwardly until the stop flanges 48, 50 engage the upper surface 52 of the flue tile. As the cap is pressed into the tile opening, the locking flanges 40 are deformed from their more outwardly extending normal position as shown in Figs. 3 and 4 to the inwardly deformed position shown in Fig. 2. Accordingly the sharp edges 42 of these flanges 40 are pressed tightly against the inner surfaces of the tile 12 and bite thereinto for preventing upward motion of the chimney cap. Since downward motion of the cap is prevented by the stop flanges 48, 50, the cap is securely and permanently attached in the fixed position on the chimney flue. Most chimney flues are lined with tiles, as illustrated in Figs. 1 and 2, and it is necessary that the barb-like biting contact of the flanges 40 be stiff and rigid for obtaining the desired security of connection to such smooth tile surfaces. It has been found that the preferred continuous extent of the plates 40 across their respective sides of the chimney cap, together with the aforedescribed very rigid anchorage thereof on the cap wall and general rigidization of the entire lower edge portion of the chimney cap, maximizes the security of the connection to the tiles 12. While the straight and continuous shape of the plates 40 and even of their edges 42 is preferred for strength, there may be and desirably are points of stress concentration whereat the edge 42 bites into the surface of the tile with concentrated force. Thus, as shown in Fig. 5, the usual tile has curved corners and it is preferred that the chimney cap be dimensioned so that the corner portions of the edge 42 of the locking flanges are deformed by the curved corner portions of the tile. In practice, it is found that this deformation relative to the remainder edge portions 42 is slight so that in fact the edge portions 42 engage the tile along the entire length of each adjacent tile surface. Moreover, the remainder of the edge portions of the locking flange serves to provide strength to that part which is especially deformed at 62.

It has been found that chimney caps in accordance with the present invention are applied very easily to the tile and yet, once applied, attach themselves so securely thereto that, for example, it is possible to lift a heavy standard tile by the cap attached thereto without any tendency of the cap becoming dislodged from the tile.

It will be understood that any suitable materials may be employed for manufacture of the cap; however, it has been found that aluminum alloy material is highly desirable throughout, from the viewpoints of resistance of the action of the weather and provision of the desired stiff resilience in the action of the locking flanges 40. However, it will be understood that while only one embodiment of the invention has been illustrated and described in detail, it may be otherwise embodied within the spirit of the invention and the scope of the appended claims.

What is claimed is:

1. The combination with a chimney flue, of a chimney cap comprising a rectangular box-like structure comprising a top, four perforated side walls connected thereto, a separate rigid rectangular rim structure on the lower edge of said side wall for insertion into said flue, and attachment means mounted on said rim structure and comprising an upwardly and outwardly extending locking flange secured at the lower edge thereof to the lower edge of said rim structure and adapted to act as a stiffly resilient barb-like hook part for engaging the interior wall of said chimney flue for preventing movement of said cap outwardly therefrom, and said cap comprising stop means adapted to bear on the top of the chimney for preventing movement of said cap inwardly thereof.

2. The combination with a chimney flue, of a chimney cap comprising a rectangular box-like structure comprising a top, four perforated side walls connected thereto, and a separate rigid rectangular rim structure on the lower edge of said side walls for insertion into said chimney, said rim structure comprising on two opposite sides of the rectangle defined thereby upwardly and outwardly extending flanges secured at the lower edges thereof to the lower edges of said rim structure and adapted to act as stiffly resilient barb-like hooks for engaging interior walls of said chimney flue for preventing movement of said cap outwardly therefrom, and said rim structure comprising on its remaining two opposite sides upward extensions ending in outwardly disposed stop flanges adapted to seat on the top of the chimney for

preventing movement of said cap inwardly thereof.

3. The combination with a chimney flue, of a chimney cap comprising a rectangular box-like structure comprising a top of imperforate sheet metal, four perforated side walls of expanded sheet metal connected rigidly thereto, and a separate rigid rectangular rim structure of sheet metal clamped on the lower edge of said side walls for reinforcing said walls and for insertion into said chimney, said rim structure comprising on two opposite sides of the rectangle defined thereby upwardly and outwardly extending flanges laterally substantially coextensive with said two sides and secured at the lower edges thereof to the lower edges of said rim structure and adapted to act as stiffly resilient barb-like hooks for engaging interior walls of said chimney flue for preventing movement of said cap outwardly therefrom, and said rim structure comprising on its remaining two opposite sides upward extensions ending in outwardly disposed stop flanges adapted to seat on the top of the chimney for preventing movement of said cap inwardly thereof, said four side walls being formed of a single sheet of material lapped upon itself at one corner of said box-like structure and clamped together by said rim structure.

4. The combination with a chimney flue, of a chimney cap comprising a rectangular box-like structure comprising a top, four perforated side walls connected thereto, and a separate rigid rectangular rim structure on the lower edge of said side walls for insertion into said chimney, said rim structure comprising on two opposite sides of the rectangle defined thereby upwardly and outwardly extending flanges laterally substantially coextensive with said two sides and secured at the lower edges to the lower edges of said rim structure and adapted to act as stiffly resilient barb-like hooks for engaging interior walls of the flue liner of said chimney for preventing movement of said cap outwardly therefrom, said flanges having sharp corners adapted to extend into the curved corners of the flue liner to provide concentrated biting engagement thereat, and said cap comprising stop means adapted to bear on the top of the chimney for preventing movement of said cap inwardly thereof.

5. The combination with a chimney flue, of a chimney cap as set forth in claim 2, wherein each of said side walls terminates at its lower end in a portion providing an inwardly extending shoulder, and said rim structure comprises separate rigidifying means mounted upon the lower end of each of said walls for reinforcing said walls and holding them together, said rigidifying means being inserted within said chimney, said rigidifying means comprising a sheet of material folded twice upon itself so as to comprise three layers, the central one of which abuts said shoulder and the other two of which form a yoke embracing the lower edge of the corresponding side wall.

6. The combination with a chimney flue, of a chimney cap comprising a rectangular box-like structure comprising a top of imperforate sheet metal, four perforated side walls of expanded sheet metal connected rigidly thereto, and a separate rigid rectangular rim structure of sheet metal clamped on the lower edge of said side walls for reinforcing said walls and for insertion into said chimney, said rim structure comprising on two opposite sides of the rectangle defined thereby upwardly and outwardly extending flanges laterally substantially coextensive with said two sides and secured at the lower edges thereof to the lower edges of said rim structure and adapted to act as stiffly resilient barb-like hooks for engaging interior walls of said chimney flue for preventing movement of said cap outwardly therefrom, and said rim structure comprising on its remaining two opposite sides upward extensions ending in outwardly disposed stop flanges adapted to seat on the top of the chimney for preventing movement of said cap inwardly thereof, said four side walls being formed of a single sheet of material lapped upon itself at one corner of said box-like structure and clamped together by said rim structure, and one of said two remaining sides of said rim structure enfolding the lapped joint of said walls.

References Cited in the file of this patent

UNITED STATES PATENTS

1,622,431	Feigenbaum	Mar. 29, 1927
2,300,088	Artis	Oct. 27, 1942
2,563,710	Epstein	Aug. 7, 1951
2,805,616	Roth	Sept. 10, 1957