United States Patent [19]

Ris et al.

[11] **3,802,496**

[45] **Apr. 9, 1974**

[54] **ADJUSTABLE SELECTIVE ORIFICING STEAM CONDENSER**

[75] Inventors: **Kenneth B. Ris,** Massillon; **Ferdinand V. Huber,** Canton, both of Ohio

[73] Assignee: **Ecodyne Corporation,** Chicago, Ill.

[22] Filed: **Jan. 18, 1973**

[21] Appl. No.: **321,104**

Related U.S. Application Data

[62] Division of Ser. No. 139,371, May 3, 1971.

[52] **U.S. Cl.** **165/101,** 165/110, 165/122, 165/174

[51] **Int. Cl.** **F28b 1/06,** F28b 11/00

[58] **Field of Search** 165/174, 101, 96, 110, 165/111, 122

[56] **References Cited**

UNITED STATES PATENTS

1,072,637	9/1913	Newman	165/96
3,073,575	1/1963	Schulenberg	165/174 X

FOREIGN PATENTS OR APPLICATIONS

908,806	10/1962	Great Britain	165/174
1,291,617	3/1962	France	165/174
758,312	8/1954	Germany	165/174
1,078,146	3/1960	Germany	165/174

Primary Examiner—Albert W. Davis, Jr.
Attorney, Agent, or Firm—Joel E. Siegel

[57] **ABSTRACT**

An air cooled steam condenser having adjustable plate means or a series of adjustable plates mounted within the steam intake header compartment. The plate means in effect form a series of interconnected subchambers, each of which communicates with a row of cooling tubes in which steam is condensed by a stream of cooling air flowing over, around and past the tubes. The rows of tubes extend transversely of the direction of airflow and the rows extend perpendicular to the direction of airflow at spaced intervals. An adjustable inlet passage is formed by each plate through which stream flows into the subchambers. The passages are smaller in area for each successive subchamber in the header through which the steam flows so that only that amount of steam that can be condensed effectively within the tubes in any row, enters such row, having regard to the tube length and the temperature difference at the particular row which determines the cooling effect of the airflow over the successive rows of tubes.

3 Claims, 14 Drawing Figures

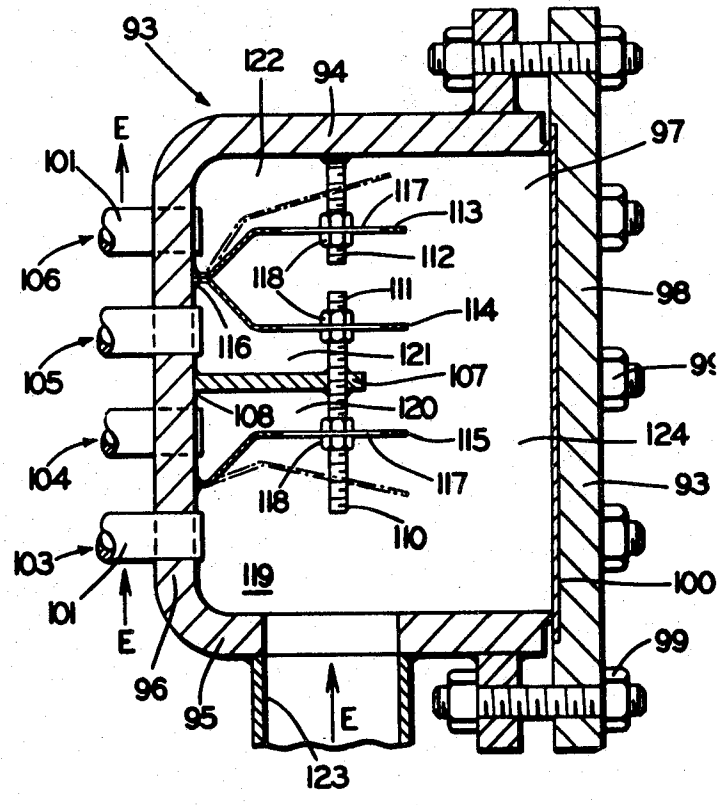

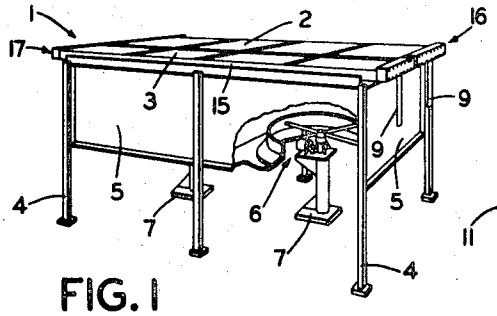

FIG. 1

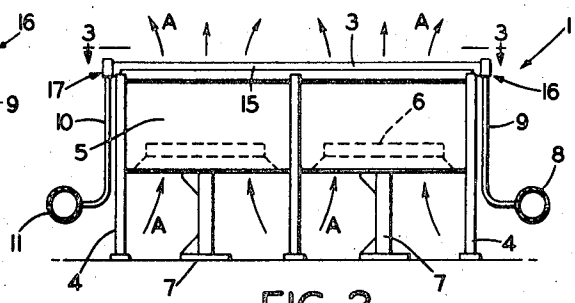

FIG. 2

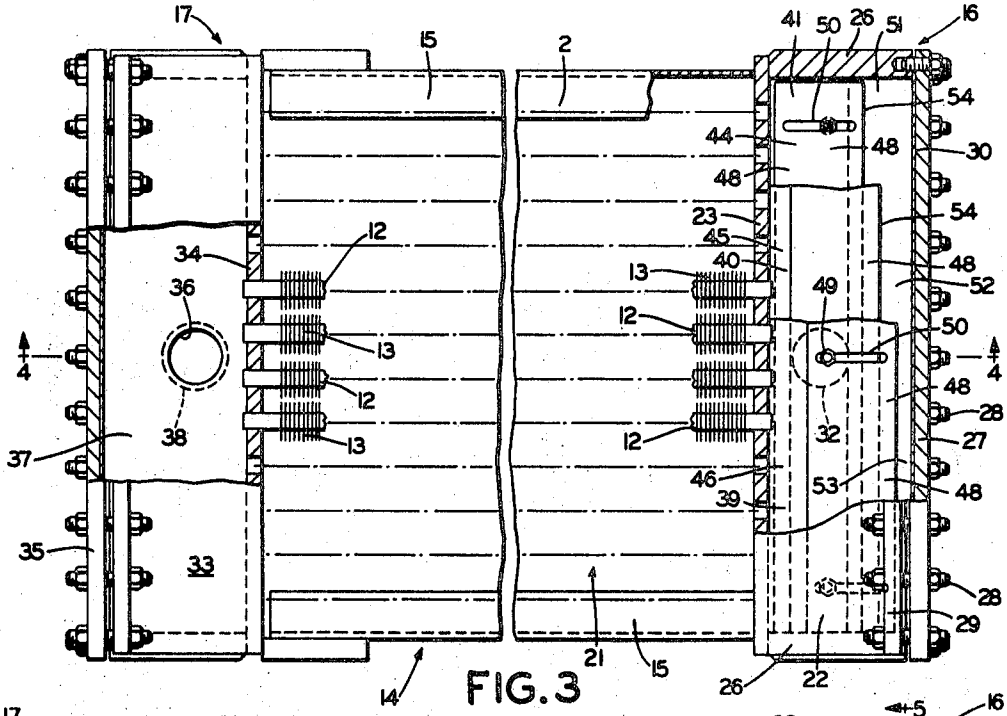

FIG. 3

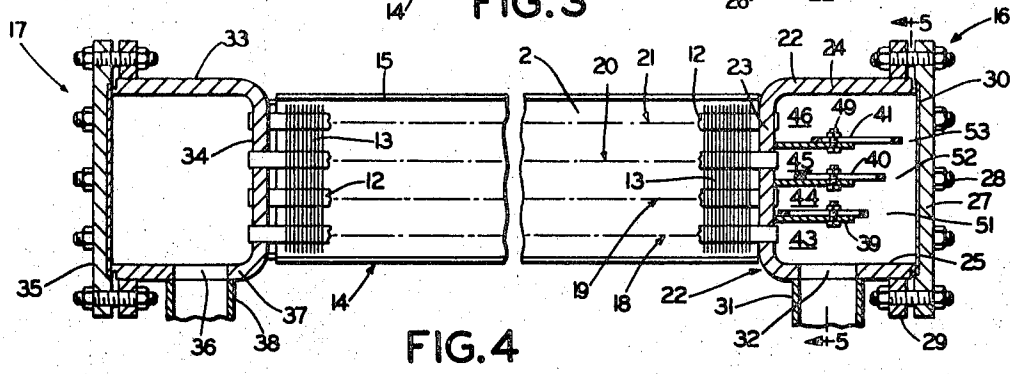

FIG. 4

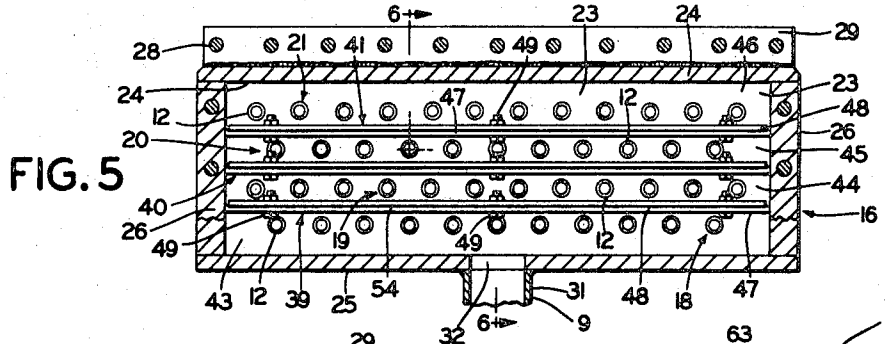

FIG. 5

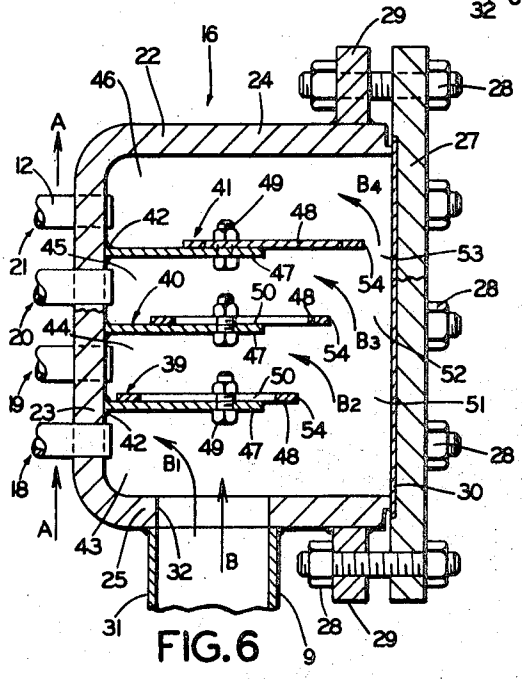

FIG. 6

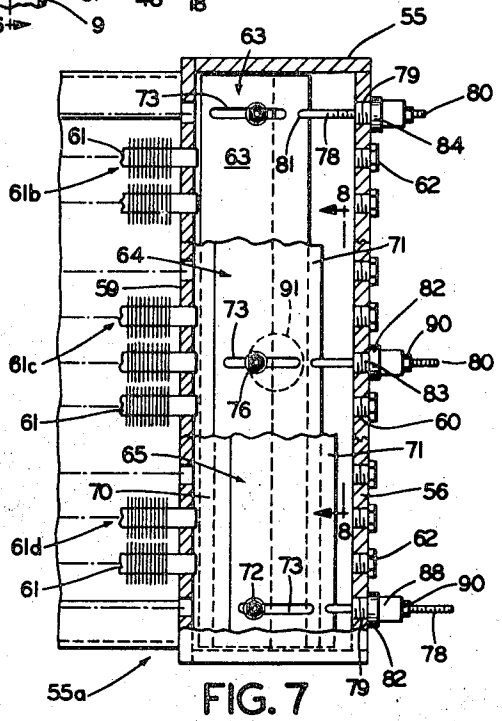

FIG. 7

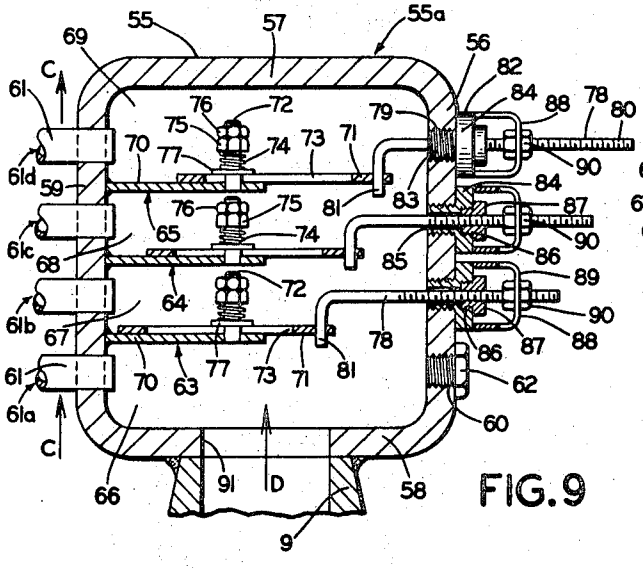

FIG. 9

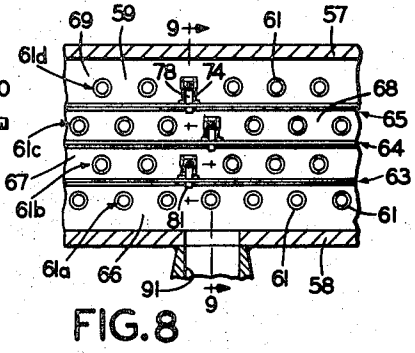

FIG. 8

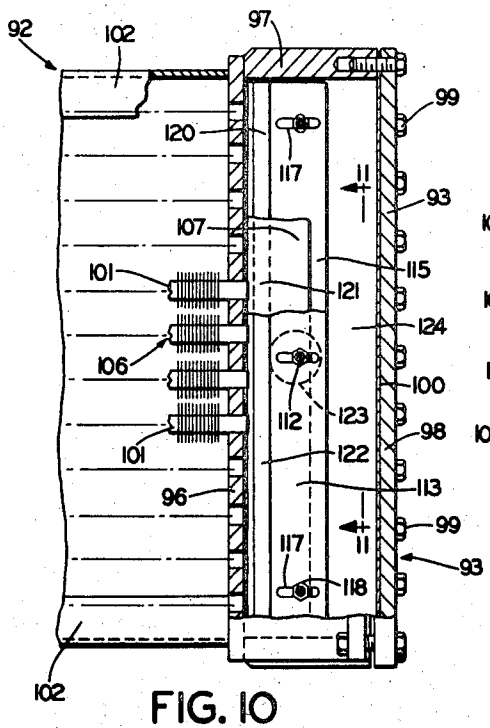

FIG. 10

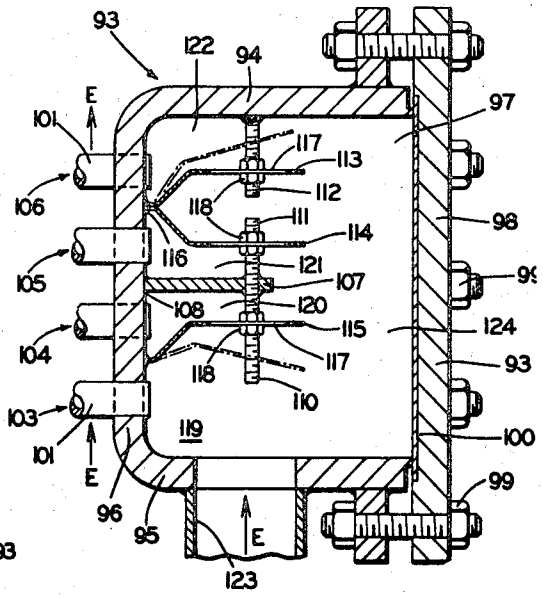

FIG. 12

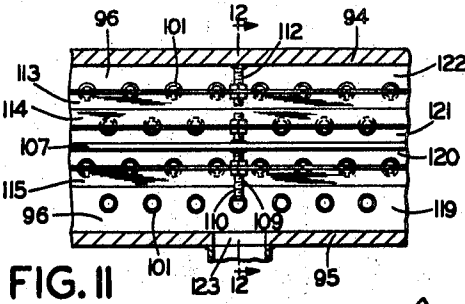

FIG. 11

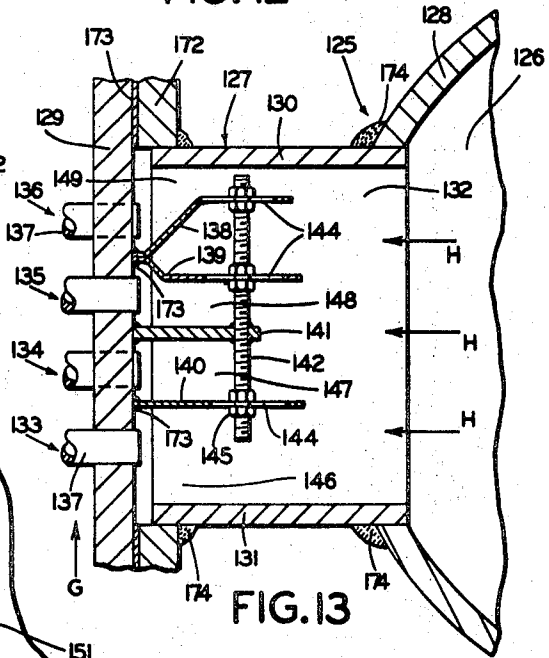

FIG. 13

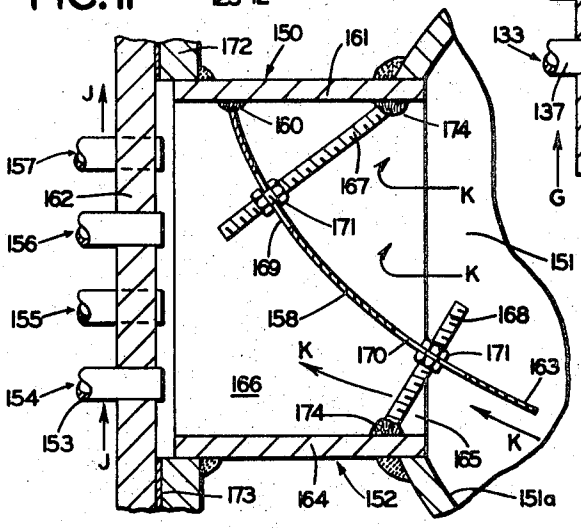

FIG. 14

ADJUSTABLE SELECTIVE ORIFICING STEAM CONDENSER

This is a division, of application Ser. No. 139,371, filed May 3, 1971.

CROSS REFERENCE TO RELATED APPLICATION

The adjustable selective orificing steam condenser construction is an improvement upon the constructions shown, described and claimed in the copending application of Kenneth B. Ris, now U.S. Pat. No. 3,731,735, granted May 8, 1973.

BACKGROUND OF THE INVENTION

1. Field of the Invention

The invention relates to heat exchangers and in particular to air cooled steam condensers. More particularly the invention relates to adjustable orificing means mounted within the condenser header whereby the amounts of steam entering various rows of condensing tubes are metered or reduced proportionally to the reduced cooling effect of the cooling air due to increased cooling air temperature resulting from heat extracted from tubes previously cooled, so that only that amount of steam that can be cooled efficiently is supplied to the tubes of a particular row.

2. Description of the Prior Art

Air cooled steam condensers usually include a plurality of condenser tubes arranged in rows one behind the other in the direction of airflow of the cooling air. Steam enters the condenser inlet header which communicates with the inlet ends of the tubes and then flows through the tubes wherein it is condensed. Fans blow cooling air across the tubes in an airflow direction generally perpendicular to the rows of tubes. The steam is condensed by the cooling air to form condensate as it travels through the tubes, and the condensate is collected at the outlet ends of the tubes in any suitable manner. Condensation should take place throughout the length of the tubes for most efficient condenser operation.

Problems have arisen in the construction and operation of air cooled steam condensers as described in U. S. Pat. No. 3,073,575 relating to inefficient steam feed distribution to the cooling tubes, temperature differential changes due to changing weather conditions, etc. The various solutions to such problems suggested in said U.S. Pat. No. 3,073,575, however, are complicated in structure and expensive in execution.

No air cooled steam condenser constructions of which we are aware have eliminated the problems of uneven steam distribution by efficiently metering or distributing the steam within the condenser inlet header by simple partition means using simple finned condenser tubes in all rows of the condenser having the same structure and characteristics as to diameter, length and cooling fin surface.

These problems have been eliminated by the constructions shown in U.S. Pat. No. 3,731,735 wherein one or more fixed partition plates that meter the amounts of steam entering the various rows of condensing tubes by forming inlet passages and subchambers, are mounted within the condenser header.

These constructions involve determination and formation of the inlet passage and subchamber sizes based upon an average of design factors, such as inlet steam temperature and pressure, and cooling airflow temperature and velocity. Thus, where one or more of these

factors vary the design fails to be optimum and the efficiency of the condenser is reduced. Furthermore, this requires each condenser to be designed and constructed for a specific application and specific conditions without any flexibility in condenser operation and use once so designed and constructed.

It is desirable to provide some means in the condenser construction, and preferably in the steam inlet header, for selective adjustment of the steam distribution pattern, not only so that optimum operating conditions can be provided during original installation of a particular condenser, but also so that adjustments can be made from time to time to compensate for seasonal changes or for steam supply factors that may change.

SUMMARY OF THE INVENTION

Objectives of the invention include providing adjustable selective orificing for steam condensers which meters the amounts of steam flowing to and through the cooling tubes in tube rows of the condenser, proportional to the condensing ability of the tubes in any particular tube row; providing adjustable selective orificing for steam condensers having condenser tubes all of which are the same in length, passage cross section, number of fins, and total heat exchange surface area; providing adjustable selective orificing for steam condensers in which adjustable plates forming passages of varying widths or areas are mounted within the condenser inlet header for selective distribution of steam; providing adjustable selective orificing for steam condensers permitting existing condenser designs to be converted easily and inexpensively to establish adjustable metered distribution of steam to the several rows of cooling tubes in the condenser; providing adjustable selective orificing for steam condensers in which the metered distribution of steam may be varied as condenser design factors vary to insure optimum efficiency in condenser operation; and providing selective orificing for steam condensers which eliminate difficulties therefore encountered, achieve the stated objectives simply and effectively, and solve problems and satisfy existing needs.

These objectives and advantages are obtained by the adjustable selective orificing construction for steam condensers, the general nature of which may be stated as including in a steam condenser for condensing steam in a plurality of tubes arranged in a plurality of generally parallel rows, extending between and communicating with a steam inlet header and a condensate outlet header; the rows of tubes extending transversely of and at spaced intervals perpendicular to the direction of airflow of cooling air that passes over and around the rows of tubes to condense steam flowing through the tubes from the inlet header; the steam inlet header having a chamber and inlet means for said chamber; partition means adjustably mounted within the chamber dividing the chamber into a series of metered steam zones each communicating with at least one row of tubes; said partition means being constructed to distribute inlet steam in the chamber in successively smaller amounts to each successive zone corresponding to the reduced cooling effect of the airflow of cooling air passing successively over the spaced rows of tubes to which steam is distributed from successive zones; means preferably including a plurality of partition plates dividing the chamber into a plurality of sub-

chambers forming said successive zones and communicating respectively with successive rows of tubes; a passage formed by each plate for supplying steam from one subchamber zone to the adjacent subchamber zone; the passages formed by successive plates between adjacent subchamber zones being successively smaller; and means communicating with the plates for adjusting the size of the passages formed by the plates.

In the alternative the partition means may include an adjustable partition plate located in the inlet header angularly with respect to the tubesheet at the inlet ends of the rows of tubes; and said angular plate defining in said header a passage and a series of successively smaller tube inlet zones communicating respectively with successive rows of tubes.

BRIEF DESCRIPTION OF THE DRAWINGS

Preferred embodiments of the invention — illustrative of the best modes in which applicants have contemplated applying the principles — are set forth in the following description and shown in the drawings and are particularly and distinctly pointed out and set forth in the appended claims.

FIG. 1 is a perspective view, with portions broken away, showing an air cooled steam condenser equipped with the improved adjustable selective orificing plate construction;

FIG. 2 is a diagrammatical side elevation of the steam condenser shown in FIG. 1;

FIG. 3 is an enlarged fragmentary top plan view, with portions broken away and in section, looking in the direction of arrows 3-3, FIG. 2, showing one condenser section;

FIG. 4 is a sectional view taken on line 4—4, FIG. 3;

FIG. 5 is a sectional view taken on line 5—5, FIG. 4;

FIG. 6 is a greatly enlarged sectional view taken on line 6—6, FIG. 5;

FIG. 7 is a fragmentary top plan view, with portions broken away and in section, showing a modified steam condenser construction having a welded inlet header construction equipped with improved adjustable selective orificing plate means;

FIG. 8 is a fragmentary sectional view taken on line 8—8, FIG. 7;

FIG. 9 is an enlarged sectional view taken on line 9—9, FIG. 8;

FIG. 10 is a fragmentary top plan view, with portions broken away and in section, showing a steam condenser construction similar to FIG. 6 having another embodiment of the improved adjustable selective orificing plate means;

FIG. 11 is a fragmentary sectional view taken on line 11—11, FIG. 10;

FIG. 12 is an enlarged sectional view taken on line 12—12, FIG. 11;

FIG. 13 is a fragmentary sectional view showing a modified steam condenser construction having a cylindrical steam drum or header equipped with improved adjustable selective orificing plate means; and

FIG. 14 is a fragmentary sectional view showing another embodiment of the improved adjustable selective orificing plate means mounted within a cylindrical steam drum condenser construction as shown in FIG. 13.

Similar numerals refer to similar parts throughout the drawings.

DESCRIPTION OF THE PREFERRED EMBODIMENTS

First Embodiment

A typical air cooled heat exchanger is indicated at 1, (FIGS. 1 and 2) and includes two steam condenser sections 2 and 3 supported on frame members 4 and having side and end panels 5 mounted on the frame members 4. Fans 6 mounted on pedestals 7 beneath condenser sections 2 and 3 blow cooling air (indicated by arrows A, FIG. 2) upward through sections 2 and 3.

A steam supply manifold 8 communicates with a source of steam, such as the exhaust of a steam turbine, to be condensed, and pipes 9 form steam inlets for the individual sections 2 and 3 from manifold 8. Condensate outlet lines 10 are connected to the opposite ends of sections 2 and 3 and deliver condensate into a main condensate line 11.

Different heat exchanger installations may have a different number of condenser sections 2 and 3 assembled together. The operation and function of condenser sections each having the improved adjustable selective orificing means incorporated therein are similar. Therefore only one condenser section 2 (FIGS. 3–6) is described in detail.

Condenser section 2 includes a plurality of cooling tubes 12 preferably having helical fins 13 extending outward therefrom. Tubes 12 are mounted within a frame 14 having side channels 15, an inlet header 16 and an outlet header 17.

Tubes 12 are mounted parallel to each other within frame 14 in a plurality of rows 18, 19, 20 and 21 spaced one above the other (FIGS. 4, 5 and 6) arranged in that order along the direction of airflow indicated by the arrow A. Tubes 12 in a particular row may be spaced intermediate the tubes in the adjacent rows, above and below, as shown in FIG. 5. Likewise, tubes 12 are assembled within frame 14 so as to have a slight incline from inlet header 16 to outlet header 17 so that condensate flows or drains into header 17.

Inlet header 16 has a coverplate header construction including a U-shaped member 22 formed of tubesheet 23, top and bottom wall portions 24 and 25 and side walls 26 (FIGS. 4 and 6). A removable end wall or coverplate member 27 closes the open end of and is attached to header member 22 by bolts 28 engaged with flange 29 on member 22. Coverplate 27 is sealed by gasket 30.

The inlet ends of tubes 12 are connected in a usual manner by expanding or welding in tubesheet 23. Coverplate 27 is removed easily from member 22 to permit access into header 16 and to tubes 12 for adjustment of the selective orificing means located within header 16, and for expanding or welding tubes 12 and for cleaning and for removing any obstructions that may form in tubes 12.

The upper end 31 of steam inlet pipe 9 is connected to header bottom wall 25 communicating with the header steam inlet opening 32.

Condensate outlet header 17 (FIG. 4) may be constructed similar to header 16 including a U-shaped member 33 with a tube-sheet 34 connected to the outlet ends of tubes 12. A coverplate 35 closes the open end of member 33. Condensate outlet opening 36 in

bottom wall portion 37 of header 17 is connected with the upper end 38 of condensate outlet line 10.

In accordance with the invention a plurality of adjustable partition plates (FIG. 6), indicated at 39, 40 and 41 are mounted within header 16 on tubesheet 23 preferably by welding at 42 and extend outward therefrom into the compartment of header 16. The plates 39, 40 and 41 are parallel to each other and to bottom wall 25, and are mounted between tube rows 18 and 19, 19 and 20, and 20 and 21, respectively. Thus, subchambers 43, 44, 45 and 46 are formed within header 16.

Partition plates 39–41 each preferably includes a fixed base plate 47 and a top plate 48. Top plate 48 is adjustably mounted on base plate 47 by bolts 49 which extend through slots 50 formed in top plate 48. The number of attaching bolts 49 and slots 50 for each partition plate may vary depending upon the length of header 16 and the thickness and length of top plate 48. Three such attaching bolts and adjustment slots for each plate 48 are shown in FIG. 5.

Top plates 48 form a series of subchamber inlets 51, 52 and 53 between the outer or free edges 54 of plates 48 and cover-plate 27. The position of the free edges 54 of partition plates 39–41 is adjusted easily by adjusting the location of bolts 49 in slots 50, after removal of coverplate 27, to change the size of inlets 51-53. As shown, inlet 51 is larger than inlet 52, and inlet 52 is larger than inlet 53.

Steam flow, indicated by arrows B (FIG. 6), enters header 16 through distribution pipe 9 and inlet opening 32. The amount of steam that passes through subchambers 43–46 and subsequently rows 18–21 of tubes 12, respectively, becomes decreasingly smaller due to the decreasing size of inlets 51–53.

Therefore, a larger amount of steam B_1 enters the tubes in row 18 for condensation therein than the reduced amount of steam B_2 entering tube row 19 and likewise the further reduced amounts of steam B_3 and B_4 entering tube rows 20 and 21. This continual reduction in amounts of steam entering succeeding tube rows of similar tubes spaced along the direction of flow A of the cooling air is a characteristic of the concept of the invention. This compensates for the continual increase in temperature of the cooling air and the decreasing means effective temperature difference as the air passes from row 18 over the subsequent rows 19–21 picking up heat from the previously cooled rows of tubes.

The sizes of inlets 51–53 are determined by adjusting partition plates 39–41 in any particular installation, taking into consideration factors including the pressure and temperature of the steam entering header 16, the velocity and temperature of cooling air flowing at A past the tubes 12, and the total finned heat exchange cooling surface of tubes 12. Ideally, the size of inlets 51–53 will be such that the amounts of steam $B_1 - B_4$ entering the respective rows 18–21 of tubes 12 will be completely condensed as steam flow in any tube 12 reaches the outlet header 17.

Thus, in the event that any of these above design factors change, partition plates 39–41 may be adjusted accordingly to admit more or less steam $B_1 - B_4$ through inlets 51-53 for condensation within tubes 12. For example the sizes of inlets 51–53 may be increased in winter months in cold weather regions due to the increased cooling ability of the cooling air. Likewise, should the pressure or temperature of the steam entering header 16 change due to a change in operating conditions of the source of steam supply, plates 39–41 may be adjusted accordingly to enable maximum efficiency to be achieved in the operation of the condenser.

The particular construction of header 16 described having a coverplate member 27 is preferred for low pressure applications and for installations in which rapid fouling occurs within tubes 12. Coverplate 27 may be removed easily to provide access to tubes 12 and the header chamber for rapid and efficient cleaning and removal of any foreign matter therein. Coverplate 27, likewise, provides quick and easy access into header 16 for adjusting partition plates 39–41.

Second Embodiment

A modified steam condenser construction is indicated at 55a, (FIGS. 7, 8 and 9) and includes an inlet header 55 preferably having a welded construction of the type shown in Patent No. (Serial No. 748,311) of Melvin G. Yohn and preferably is used in applications having higher steam pressures than those applications in which header 16 described above is used. The header construction of FIG. 9 is similar to header 16 except that the end wall or plug sheet 56 is continuous and integral with the top and bottom header walls 57 and 58 and tubesheet 59.

Rows of tubes 61*a* – 61*d* each having a plurality of tubes 61, have their inlet ends expanded in or welded to tubesheet 59 and communicate with inlet header 55. Tubes 61 otherwise are arranged like tubes 12 in condenser 1 and cooling air flows past tubes 61 as indicated at C.

Holes 60 are formed in plug sheet 56 aligned with the inlet ends of tubes 61 to permit access into header 55 and to tubes 61 for expanding or welding tubes 61 in tubesheet 59 and for cleaning and removing any obstructions that may be formed in tubes 61. Removable plugs 62 close holes 60.

A plurality of adjustable partition plates 63, 64 and 65 are mounted within header 55 and form a series of subchambers 66, 67, 68 and 69 (FIG. 9) which communicate with tube rows 61*a* – 61*d*, respectively. Partition plates 63-65 and subchambers 66–69 are similar in construction and function to partition plates 39–41 and subchambers 43–46, respectively, in inlet header 16. Likewise, partition plates 63–65 each includes a fixed plate 70 and a moveable top plate 71.

The integral construction of header 55 prevents direct access to partition plates 63-65 for manual adjustment. Accordingly, adjusting means external to header 55 is provided.

Threaded studs 72 project from the free ends of each plate 70 and extend through slots 73 in movable top plates 71. Each top plate 71 is releasably tension-clamped to base plate 70 by springs 74 tensioned by nuts 75 and lock nut 76 on studs 72. Washers 77 may be placed between springs 74 and top plate 70. The spring tension on top plates 71 is such that any pressure exerted by incoming steam does not affect the adjusted positions of top plates 71, yet enables top plates 71 to be slidably moved with respect to plates 70 by means described below.

A number of adjusting rods 78, preferably three such rods for each plate, extend through holes 79 in plug sheet 56 and are connected to partition plates 63–65. A rod 78 preferably is located at each end and centrally of partition plates 63–64 for ready plate adjustment.

Rods **78** preferably are L-shaped having a threaded stem portion **80** and a leg portion **81.** A plug **82** having a threaded shank **83** and a head **84** is threaded into each hole **79.** Plug shank **83** has a central bore **85** coaxial with an enlarged threaded bore **86** formed in plug head **84.** A packing gland **87** may be located in bore **86** to seal rod **78.**

A U-shaped saddle **88** extends outward from plug head **84** provided with an opening in its web **89** through which rod stem **80** extends. Nuts **90** threaded on stem **80** on each side of web **89** retain rod **78** in adjusted position.

Adjustment of partition plates **63-65** is accomplished easily by loosening nuts **90** and by moving rods **78** into or out of header **55.**

Steam flow indicated by arrow D (FIG. **9**) enters header **55** through distribution pipe **9** and inlet opening **91** formed in bottom wall **58** and is metered and distributed in tube rows **61***a* – **61***d* through subchambers **66–69** in the same manner as steam flow B in header **16.**

Third Embodiment

Another modified steam condenser construction having adjustable selective orificing means incorporated therein is indicated at **92** in FIGS. **10, 11** and **12.** Condenser **92** has a coverplate header **93** similar to header **16,** including top and bottom walls **94** and **95,** tubesheet **96,** end walls **97** and a coverplate **98.** Coverplate **98** is attached to header **93** by bolts **99** and the connection may be sealed by a gasket **100.**

Tubes **101** are mounted parallel within condenser frame **12** in rows **103, 104, 105** and **106** in that order along the direction of airflow indicated by arrows E (FIG. **12**). The inlet ends of tubes **101** are connected by expanding or welding to tubesheet **96.**

A partition wall **107** is welded at **108** to tubesheet **96** between tube rows **104** and **105** and extends outward from tubesheet **96** within the header compartment.

A stud **109,** threaded at ends **110** and **111,** projects in each direction from the outer end of partition **107.** Another stud **112** projects from top wall **94** toward and preferably aligned with stud **109.**

A pair of flexible metal sheets **113** and **114** are welded at **116** to tubesheet **96,** between tube rows **105** and **106** and branch away from each other in the compartment of header **93.** Another flexible sheet **115** is attached to tubesheet **96** between tube rows **103** and **104** and extends within the header compartment in a manner similar to sheets **113** and **114.** Sheets **113, 114** and **115** each are formed with slots **117** through which studs **112** and stud ends **110** and **111,** respectively, extend. Pairs of stud positioning nuts **118** retain sheets **113–115** in adjusted positions within the header compartment.

Wall **107** and partition sheets **115–113** extend longitudinally throughout the length of header **93** (FIG. **10**) and form a series of subchambers **119, 120, 121** and **122** communicating with tube rows **103, 104, 105** and **106,** respectively.

The positions of partition sheets **113-115** in header compartment are adjusted so that subchambers **119-122** progressively decrease in size in the direction of the cooling airflow indicated by arrows E, passing over the respective rows of tubes **103–106.**

Adjustment of subchamber forming partition sheets **113–115** is made easily by loosening nuts **118** and then flexing the sheets in either direction as shown in dot-dash lines in FIG. **12.** Slots **117** and lock nuts **118** enable the sheets to be adjusted to different positions with respect to studs **110–112.**

Steam flow indicated by arrow F (FIG. **12**) upon entering header **93** through inlet opening **123,** first flows through subchamber **119** and then through header zone **124** located between coverplate **98** and the openings for subchambers **119–122.** Various amounts of steam enter tubes **101** of tube rows **104–106,** from zone **124,** depending upon the size of the entrance to the subchamber communicating with the particular row of tubes, which subchamber entrance is regulated by the adjustment of sheets **113–115.**

The cooling airflow first passes over tube row **103** which is connected to subchamber **119** which receives the largest amount of steam. Sheet **115** is adjusted so that subchamber **120** receives the next largest amount of steam, and sheets **114** and **113** are adjusted so that subchambers **121** and **122** each receives a progressively smaller amount of steam.

Thus, as any of the factors affecting the condenser operation change, sheets **115-113** must be adjusted accordingly to regulate the amounts of steam entering the tube rows **103–106**

The partition means **113-115** may be hinged to tubesheet **96** rather than welded thereto, in order to permit adjustment of the subchamber openings.

Fourth Embodiment

The new steam condenser construction may be incorporated in a cylindrical steam manifold **125** shown in FIG. **13.** Header **125** includes a chamber **126** formed by cylindrical walls **128** and a header inlet section **127** defined by tubesheet **129,** top and bottom walls **130** and **131,** and end walls **132.**

Header section **127** is provided with a flange **172** which is connected in a suitable manner with tubesheet **129.** The connection may be sealed by a gasket **173.** Top and bottom walls **130** and **131** and end walls **132** are secured to cylindrical walls **128** and flange **172** by welds **174.**

Tube rows **133–136** each having a plurality of tubes **137,** are connected by welding or expanding to tubesheet **129.** Tubes **137** are arranged in the same manner as tubes **12, 61** and **101** in condensers **1, 55***a* and **92** and cooling air flows past tubes **137** in a direction indicated at G.

Flexible metal partition sheets **138, 139** and **140** and partition wall **141** are connected within the header inlet section **127** to tubesheet **129** by welds **173** and extend into the compartment formed by header **127.** Studs **142** project from partition wall **141** and extend through slots **144** formed in sheets **138–140.** Nuts **145** retain sheets **138–140** in adjusted position.

Partition wall **141** and partition sheets **140-138** thus form subchambers **146, 147, 148** and **149** which communicate with the successive rows of tubes **133–136.**

Steam flow, indicated by arrows H enters the zone located between the open end of header section **127** and the openings to subchambers **146–149,** directly from the steam manifold chamber **126.**

The partition sheets **138-140** are adjusted so that subchambers **146–149** and the steam distributed to each subchamber is largest in amount for subchamber **146** and progressively smaller in subsequent subchambers along the direction of airflow G.

Fifth Embodiment

Another modified form of header construction is shown at **150** in FIG. **14** and includes adjustable selective orificing means.

Header **150** includes a manifold chamber **151** formed by a cylindrical drum **151***a* and a header inlet section **152**. Tubes **153** located in parallel spaced rows **154–157** are connected to tubesheet **162** by welding or expanding. Cooling air flows past tubes **153** as indicated by arrows J.

A curved flexible baffle **158** is mounted within the header inlet section **152** preferably by welding at **160** to top wall **161**. Baffle **158** extends downwardly at an angle away from tubesheet **162** into manifold chamber **151**. The lower portion **163** of baffle **158** is spaced above bottom wall **164** of header section **152** to form a passage **165** communicating between header chamber **151** and header subchamber **166** located between partition baffle **158** and the inlet ends of tubes **153**.

Threaded studs **167** and **168** extend through slots **169** and **170** formed in baffle **158** and are adjustably connected to baffle **158** by nuts **171**. Studs **167** and **168** preferably are attached within header **150** to header inlet section top and bottom walls **161** and **164**, respectively, by welds **174**.

A number of studs **167** and **168** may be located in spaced relation along baffle **158** to provide adjustment for baffle **158**.

The angular arrangement of baffle **158** with respect to tubesheet **162** forms a series of zones in subchamber **166** of decreasing size from bottom to top opposite the inlet ends of the rows **154–157** of tubes **153**. This series of zones of decreasing size meters the amounts of steam flowing into tube rows **154–157** in decreasing amounts distributed from the main steam flow indicated at K entering subchamber **166** from manifold **151** through passage **165**.

Baffle **158** thus forms adjustable partition means defining in header **150** and header section **152** a passage **165** and a series of successively smaller tube inlet zones communicating respectively with the successive rows or tubes **154–157**.

The amount of steam entering the various tube rows is adjusted by flexing baffle **158** about weld point **160**, thereby changing the angle of baffle **158** with respect to tubesheet **162** which changes the capacity and shape of subchamber **166** and the amounts of steam entering the various tube rows. Flow J of cooling air is in the direction across tube rows **154–157** such that row **154**, which receives the greatest amount of steam, is cooled by the coolest air.

Baffle **158** may be adjusted to permit various steam distribution patterns to be established in the design of subchamber **166**. Baffle **158** may be hinged to top wall **161** rather than welded thereto, in order to permit adjustment of subchamber **166**.

IN GENERAL

In each of the embodiments of the invention illustrated and described, adjustable partition means is provided within the inlet header to distribute the incoming steam in decreasing amounts to successive rows of cooling tubes so that the row of tubes first cooled by the coolest airflow receives the greatest amount of steam and subsequent tube rows along the path of airflow receive proportionally decreasing amounts of steam. Any individual row of tubes therefore receives only that amount of steam that can be condensed throughout its length, eliminating premature or insufficient condensation within the tubes, while using tubes all identically the same in construction of the condenser. The partition means may be adjusted to admit more or less amounts of steam into the various tube rows, so that as the factors which affect the condensation rate within the tubes change, the supply of steam to the tubes can be changed to enable the condenser to operate at optimum efficiency.

Accordingly, the adjustable selective orificing steam condenser construction provides for progressively reducing the amount of steam passing through header zones so as to correspond to the location of the rows of tubes in the path of flow of cooling air; enables condenser tubes having the same length, the same passage cross section, the same number of fins and the same total heat exchange surface to be used in fabricating the condenser; enables many designs of steam condensers to be easily and inexpensively converted to include the improved adjustable selective orificing construction; enables the amount of steam that enter the various rows or tubes to be adjusted so that if those factors which affect the rate of condensation are changed, then the amounts of steam to be condensed are adjusted accordingly to provide maximum efficiency in the operation of the condenser; prevents premature condensation which may result in frozen conditions during cold weather; and provides such a construction which is effective, safe, inexpensive, and efficient in assembly, operation and use, and which achieves all the enumerated objectives, provides for eliminating difficulties encountered with prior devices, and solves problems and obtains new results in the art.

In the foregoing description, certain terms have been used for brevity, clearness and understanding but no unnecessary limitations are to be implied therefrom beyond the requirements of the prior art, because such terms are used for descriptive purposes and are intended to be broadly construed.

Moreover, the description and illustration of the invention is by way of example, and the scope of the invention is not limited to the exact details of the construction shown or described.

Having now described the features, discoveries and principles of the invention, the manner in which the improved adjustable selective orificing steam condenser is constructed, assembled and operated, the characteristics of the new construction, and the advantageous, new and useful results obtained; the new and useful structures, devices, elements, arrangements, parts, and combinations are set forth in the appended claims.

We claim:

1. In a steam condenser of a type in which a plurality of tubes are arranged in a plurality of generally parallel rows, extending between and communicating with a steam inlet header and a condensate outlet header; in which the rows of tubes extend transversely of and at spaced intervals perpendicular to the direction of airflow of cooling air that passes over and around the rows of tubes to condense steam flowing through the tubes from the inlet header to the outlet header; and in which all of the tubes in all of the rows have the same internal diameter and length and the same heat exchange cooling surface area; the steam inlet header having a chamber and inlet means for said chamber; partition means mounted within the chamber including a plurality of partition members which divide the chamber into a plu-

rality of subchambers; said subchambers dividing the chamber into a series of metered steam zones each communicating with at least one row of tubes to distribute inlet steam in the chamber in successively smaller amounts to each successive zone corresponding to the reduced cooling effect of the airflow of cooling air passing successively over the spaced rows of the tubes to which steam is distributed from successive zones; and said inlet header includes a tubesheet to which the rows of tubes are connected; in which the partition members include a plurality of flexible sheets and a partition wall mounted on the tubesheet and extending outward into the header chamber; in which stud means are mounted on the header and project into the header chamber; and in which said flexible sheets are adjustably connected to said stud means to regulate the flow of inlet steam to said successive zones whereby the steam in each zone may be maintained at an optimum operating level by such adjustment to compensate for changes in operating conditions.

2. In a steam condenser of a type in which a plurality of tubes are arranged in a plurality of generally parallel rows, extending between and communicating with a steam inlet header and a condensate outlet header; in which the rows of tubes extend transversely of and at spaced intervals perpendicular to the direction of airflow of cooling air that passes over and around the rows of tubes to condense steam flowing through the tubes from th inlet header to the outlet header; and in which all of the tubes in all of the rows have the same internal diameter and length and the same heat exchange cooling surface area; the steam inlet header having a chamber and inlet means for said chamber; partition means mounted within the chamber dividing the chamber into a series of metered steam zones each communicating with at least one row of tubes to distribute inlet steam in the chamber in successively smaller amounts to each successive zone corresponding to the reduced cooling effect of the airflow of cooling air passing successively over the spaced rows of tubes to which steam is distributed from successive zones; and said inlet header includes header walls and a tubesheet to which the rows of tubes are connected; said partition means comprises a baffle plate movably mounted with the inlet header; said baffle plate extends from a location adjacent one row of tubes angularly outward away from the tubesheet to a location spaced from a header wall to define a passage in said header; in which said baffle defines said series of metered zones communicating with said passage and respectively with successive rows of tubes in said header; in which a plurality of rods, having adjustable clamp means, are mounted within the inlet header for adjustment of said baffle to regulate the flow of inlet steam to said successive zones whereby the steam in each zone may be maintained at an optimum operating level by such adjustment to compensate for changes in operating conditions.

3. The construction defined in claim **2** in which the baffle comprises a flexible member formed with a plurality of slots; and in which the rods extend through said slots.

* * * * *