May 11, 1948. J. L. SUSSMAN 2,441,517

MEANS FOR SHAPING METAL ARTICLES

Filed March 16, 1946

Fig. 1.



Fig. 2.

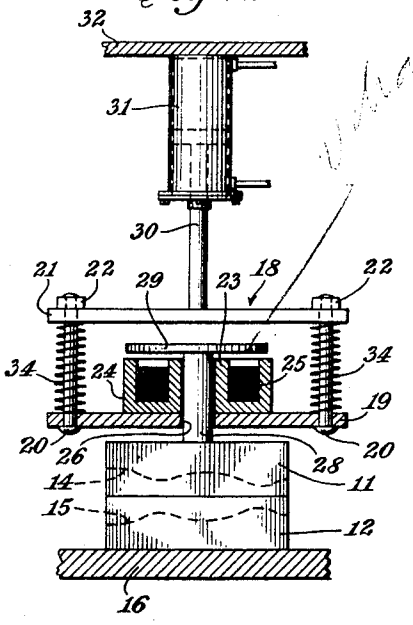

Fig. 3.

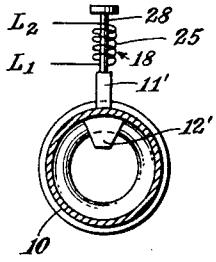

Fig. 4.

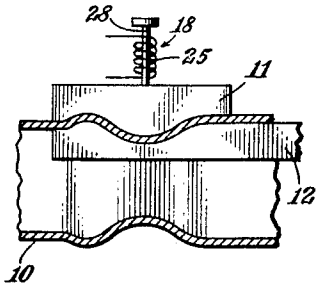

Fig. 5.

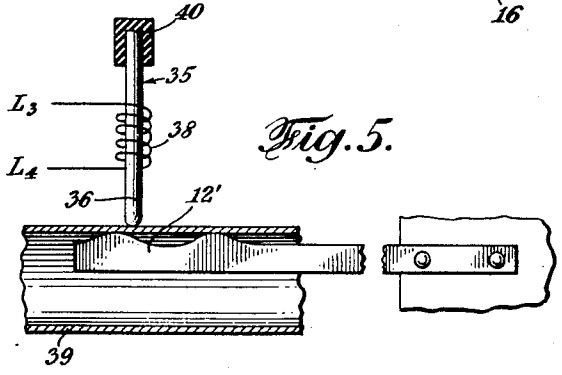

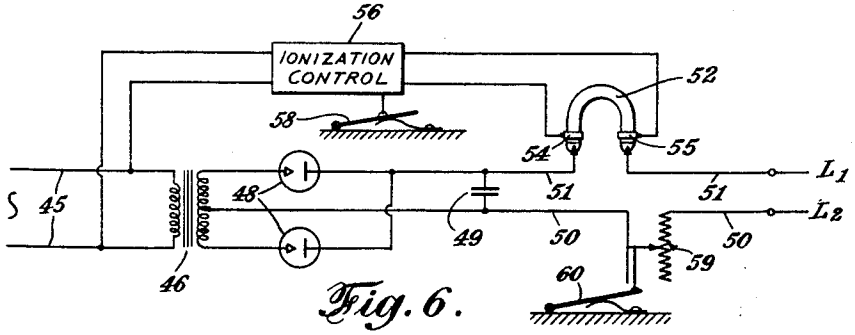

Fig. 6.

INVENTOR.
Julius L. Sussman.
BY Peter M. Boesen
ATTORNEY.

Patented May 11, 1948 2,441,517

UNITED STATES PATENT OFFICE

2,441,517

MEANS FOR SHAPING METAL ARTICLES

Julius L. Sussman, New York, N. Y.

Application March 16, 1946, Serial No. 654,933

2 Claims. (Cl. 153—73)

1

This invention relates to new and useful improvements in metal shaping apparatus, and more particularly it relates to apparatus for shaping tubular articles, such as lamp stands, corrugated pipe or tubing, but the invention is, however, not so limited and may be applied to the shaping of other objects, such as cutlery and the like. Such articles have heretofore been shaped by swaging or pressing in the cold, but these processes have not been altogether satisfactory. High speed hammers operating at about 500 strokes a minute have been employed but the formations in the work material have been made as a result of sudden severe pressures, which frequently cause breaks or cracks. If lower pressures were used the time required for the shaping of the article would be so greatly prolonged that the operation at such speeds, even of 500 strokes per minute, would not be economical enough.

One of the objects of this invention is, therefore, to provide a simple device for shaping the aforementioned articles which enables the application of rapid impacts on work stock.

Another object is to provide an easily and closely controlled device for obtaining rapid impacts.

A further obect is to provide a device for shaping articles by impact and which will have a minimum of reciprocation parts.

A still further object is to reduce the weight of moving parts in the machine for hammering out articles.

An additional object is to provide an electrical circuit for electro-percussive machines; while

Another object is to provide a hand tool which will eliminate a considerable portion of exertion during the hammering of metal.

The inventive feature for the attainment of the objects are shown in connection with an electro-magnetic hammer for shaping objects which briefly stated includes a shaping member and electro-magnetic means for actuating same, and means for discharging a condenser through the electro-magnetic means.

In the accompanying drawing showing, by way of example, three of many possible embodiments of the invention:

Figure 1 is a side elevational view of an example of an object shaped by the invention.

Figure 2 is a partial vertical sectional view of a form of the invention as applied to external die-blocks.

Figure 3 is an end view of a modification of the device shown in Figure 2 and partly schematic.

2

Figure 4 is a transverse, vertical, sectional view of the modification of Figure 3.

Figure 5 is a schematic representation of another form of the invention, while

Figure 6 is a diagram of means for actuating the shaper.

An article, such as a lamp stand column 10, may be formed between upper and lower die-blocks 11, 12, having inner faces 14, 15 complementary to opposite outer half surfaces of the column 10. The lower block 12 is preferably mounted fast on a stationary mounting member 16, while the upper block is adapted to be vertically vibrated by a vibrator generally designated 18.

The vibrator 18 comprises a horizontal support plate 19 above the die-blocks and is provided with a plurality of heavy rods 20 fast on and rising from the outer portions of said plate 19. The rods 20 pass slidably through a suspension plate 21 and are provided with end lugs 22 to prevent complete separation of the two plates. An electro-magnet 24 including a coil 25 and a central pole 23 is mounted on the plate 19, said pole and plate being provided with a vertical bore 26 through which a reciprocatory actuating rod 28 passes. The lower die-block 11 is secured fast to the lower end of the rod 28 and an armature 29 is likewise secured on the upper end thereof.

The plate 21 is raised and lowered by suitable means, such as piston 30 and cylinder 31, the latter being secured fast to fixed means 32. In operation, a tube of the work material is laid between the blocks 11, 12 after a raising of the vibrator, and the block 11. The vibrator 18 is then lowered by hydraulic or pneumatic pressure applied to the piston 30, or by gravity. It is desirable to have heavy compression springs 34 around the rods 20 and between the plates 19 and 21, so as to absorb any too severe dead pressure on the die blocks.

Since it is desirable to have the vibrator as a whole movable to facilitate inserting of the stock between the blocks, and the effective work movement of the vibrator depends on relative movement of the magnet and the die-block, it is desirable that the mass of the magnet and its mount be great relative to the die-block. Thus the magnet 24 is substantially stationary during vertical vibration of the rod 28 and block 11.

As the die is set in a state of vibration by means described later herein, the stock is rotated so that a large number of rapid die blows will be struck on the stock and the stock vibrated so as to cause

rapid flow of the metal. The amplitude of the die motion is so slight that there is a minimum of danger of the tube stock collapsing even if no mandrel die is used.

However, if an interior die is necessary a small die 12' rigidly mounted at one end may be employed, as shown in Figures 3 and 4, in cooperation with a vibrating outer die piece 11' which is actuated by the vibrator 18. Means for rotating the tube stock will be apparent to those skilled in the art.

The die-block 12' is preferably of cast iron with a small nickel content for hardness. In fact, such cast iron die-blocks are generally preferable, since their cost is very low and they have proved to be superior to blocks of tool steel. In addition the magnetic properties of such a die enables the use of a very simple shaper or hammer 35, as shown in Figure 5. The hammer comprises a rod or bar 36 of magnetic material and a magnetizing coil 38 therearound.

When intermittent current is applied to the coil, as in a manner described later herein, the attraction of the bar 36 to the die-block 12' will cause an intermittent pressure to be applied to the tube stock 39 so that a hammering effect is obtained. A resilient handle 40 enables the hammer to be used as a hand tool, although the bar may be mounted on a mount such as the plate 19 of Figure 2. The effect of the hammer may be enhanced by making the bar 36 of magneto-strictive material.

Current is supplied to the leads L_1L_2 of the coil 25 or the leads L_3L_4 of coil 38 by means of condenser discharge, as shown in Figure 6. A suitable source of current, such as a commercial supply 45 is translated to a high voltage, such as from 1,000 to 5,000 volts D. C., by means of a transformer 46 and rectifier 48 for charging a condenser 49. Conductors 50 and 51 connect the respective sides of the condenser to the aforementioned leads. A high voltage mercury arc discharge tube switch 52 is interposed in the conductor 51 for periodically discharging the condenser through the coil 25 or 38. The vapor content of the tube 52 is ionized by external igniter electrodes 54 and 55 connected to an ionization control 56, for periodically applying an ignition current of high voltage, but which may be of extremely low amperage. The control 56 is preferably such that the frequency of the ignition current may be varied by change of reluctance by means of a foot pedal 58 which can be readily improvised by one skilled in the art. Likewise a variable resistor 59 is interposed in the conductor 50 to control the quantity of current to flow through the coil, and the resistor is varied by means of pedal 60.

The frequency of discharge of the condenser 49 may be varied widely for the vapor of the tube 52 will deionize in about $\frac{1}{10,000}$ second. Of course, the ionization control need not necessarily be provided with a frequency control and may be only a transformer connected to a 60 cycle current and have an output voltage sufficient to ignite the tube 52. Such an arrangement will give strokes of 7,200 per minute.

The effect of rapid strokes is that no great deformation need be made by one blow, and the metal will have a chance to vibrate and yield or flow during a more gradual deformation.

Condenser discharge is preferable as a source of current, since very high voltage of a surging current will give a quick, strong impact to the die-block and stock.

The invention claimed is:

1. In combination, a pair of opposed die-blocks, one being movable and the pair adapted to receive work stock therebetween, a vibrator secured fast to the movable block for vibrating same toward and from the other block, said vibrator comprising a supporting plate and rods projecting perpendicularly from the outer marginal portions thereof and secured fast thereto, a suspension plate slidable on the outer end of the rods, and means for keeping the suspension plate and rods together, an electromagnet having a core directed inwardly from the supporting plate and coil therearound and mounted on the inner face of the supporting plate, said core and supporting plate being provided with an opening therethrough, a reciprocating rod in the opening and having the outer end thereof fast on the movable die-block, an armature on the inner end of the last mentioned rod, and near the face of the core, heavy springs coiled around the said rods and compressed between the two plates, said plates being sufficiently far apart to permit vibration of the armature and movable die-block.

2. In combination, a pair of die-blocks one above the other, the former being vertically movable and the pair adapted to receive work-stock therebetween, a vibrator secured fast to the movable block, said vibrator comprising a horizontal supporting plate and vertical rods rising from the outer marginal portions thereof and secured fast thereto, a horizontal suspension plate vertically slidable on the upper end of the rods, and means for keeping the suspension plate and rods together, an electro-magnet having a vertical core and coil therearound and mounted on the upper face of the supporting plate, said core and supporting plate being provided with a vertical opening therethrough, a vertically reciprocating rod in the opening and having the lower end thereof fast on the upper die-block, an armature on the upper end of the last mentioned rod, and near the upper face of the core, heavy springs coiled around the said vertical rods and compressed between the two plates, said plates being sufficiently far apart to permit vertical vibration of the armature and upper die-block, and means for raising and lowering the vibrator.

JULIUS L. SUSSMAN.

REFERENCES CITED

The following references are of record in the file of this patent:

UNITED STATES PATENTS

Number	Name	Date
1,093,301	Vande	Apr. 14, 1914
1,434,068	Schlafly	Oct. 31, 1922
1,847,085	Flint	Mar. 1, 1932
1,934,979	Hopkins	Nov. 14, 1933
1,966,446	Hayes	July 17, 1934
2,393,131	Vang	Jan. 15, 1946

FOREIGN PATENTS

Number	Country	Date
2,671	Great Britain	1888