Aug. 7, 1934. C. M. F. FRIDEN 1,969,262

CALCULATING MACHINE

Filed Nov. 10, 1931 3 Sheets-Sheet 1

FIG. 1.

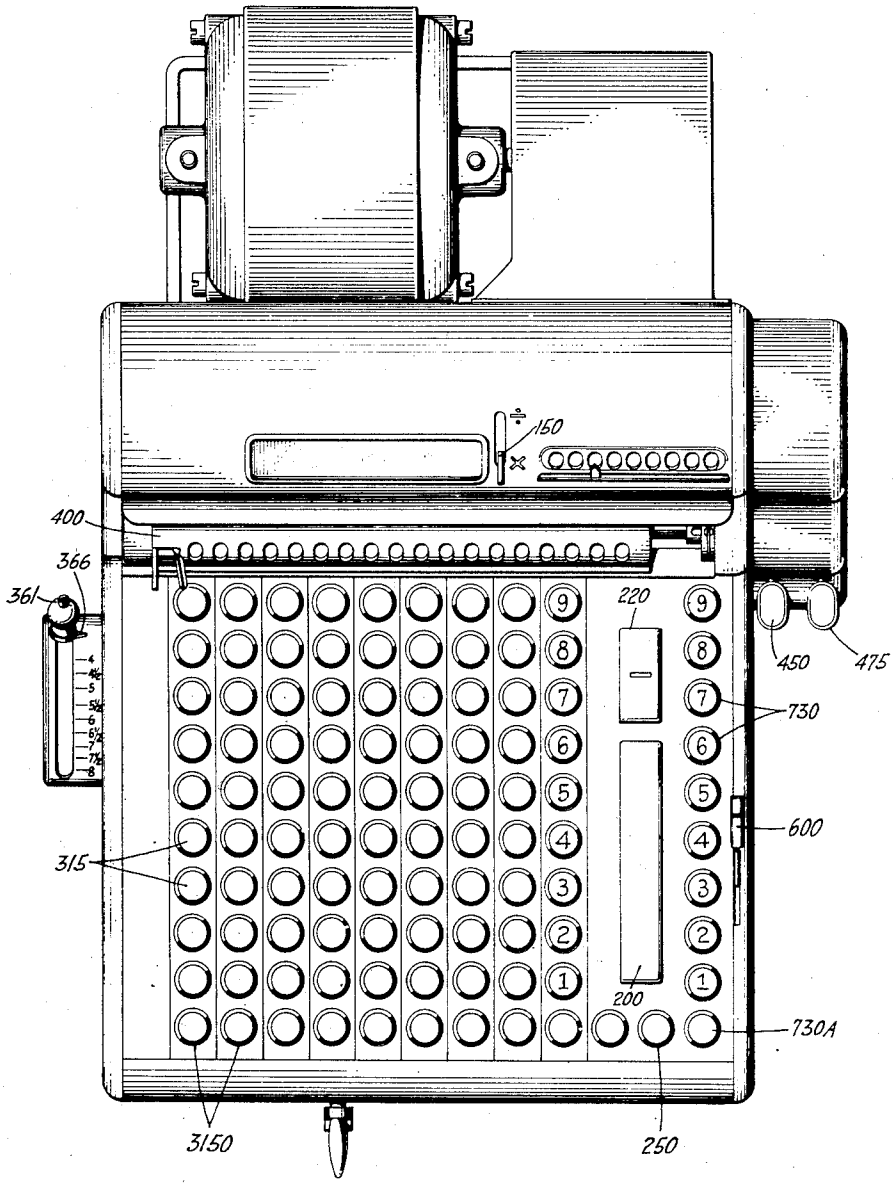

INVENTOR
Carl F. M. Friden
BY
ATTORNEY

Aug. 7, 1934. C. M. F. FRIDEN 1,969,262

CALCULATING MACHINE

Filed Nov. 10, 1931 3 Sheets-Sheet 2

FIG. 5.

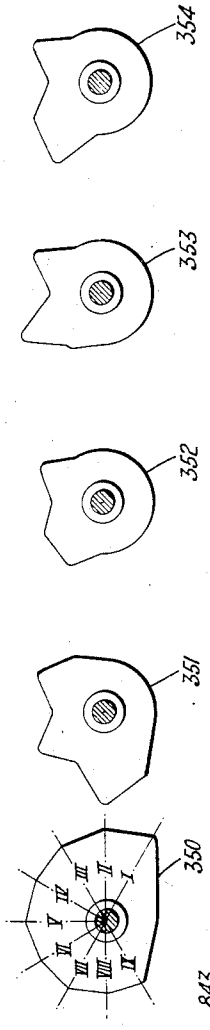

FIG. 2.

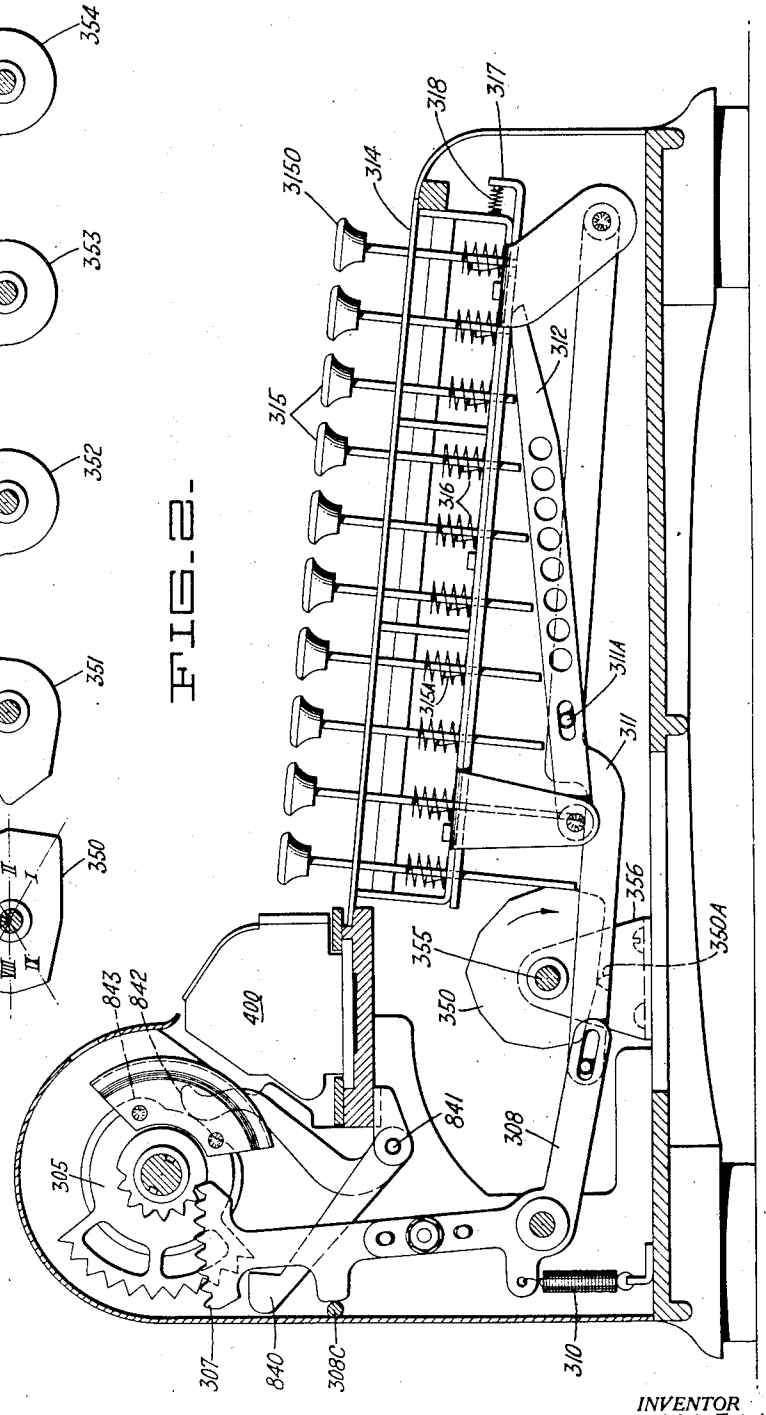

INVENTOR
Carl F. M. Friden
BY
ATTORNEY

Aug. 7, 1934. C. M. F. FRIDEN 1,969,262

CALCULATING MACHINE

Filed Nov. 10, 1931 3 Sheets-Sheet 3

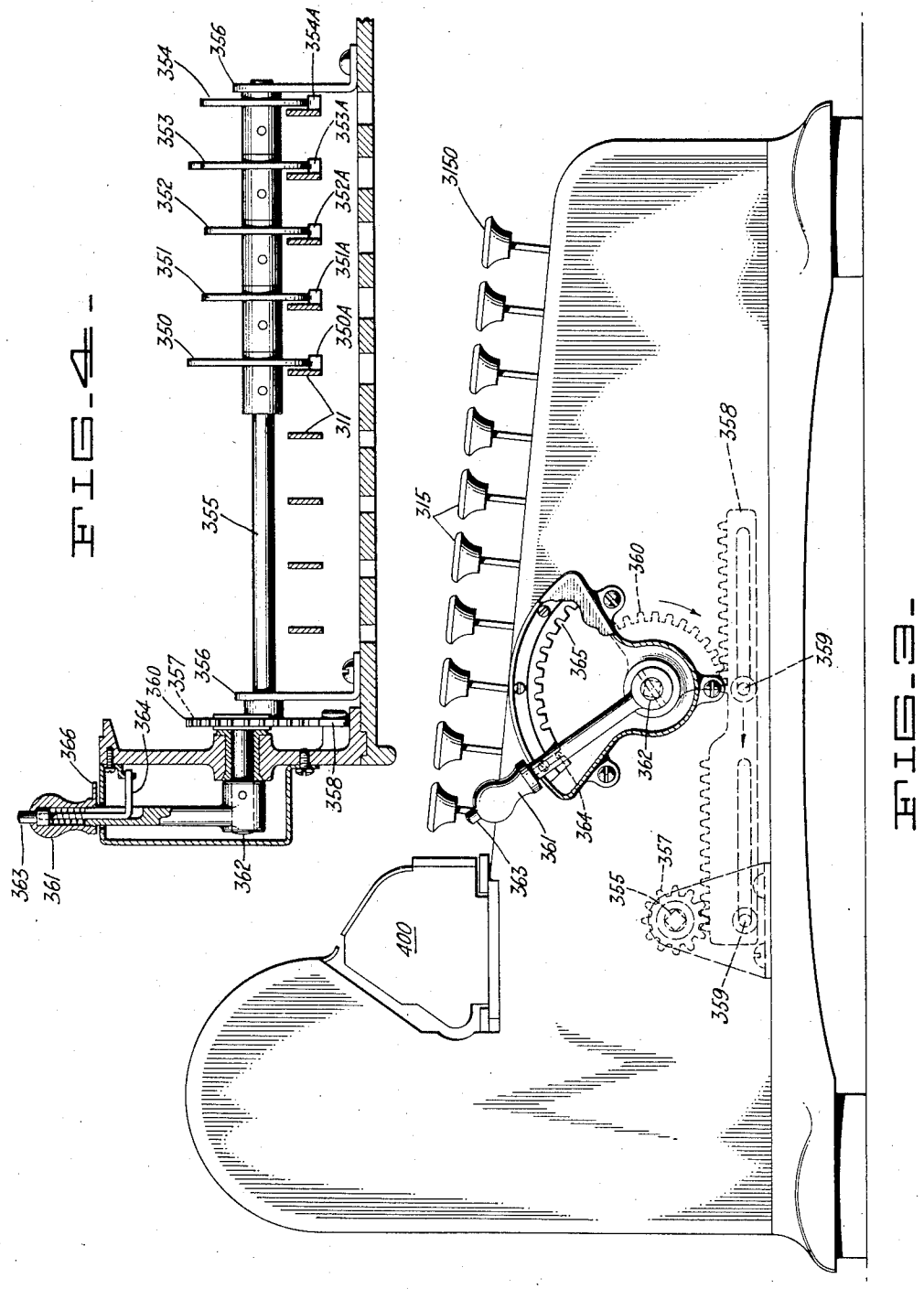

FIG. 4.

FIG. 3.

INVENTOR
Carl F. M. Friden
BY Theodore H. Lavagne
ATTORNEY

Patented Aug. 7, 1934 1,969,262

UNITED STATES PATENT OFFICE

1,969,262

CALCULATING MACHINE

Carl M. F. Friden, Piedmont, Calif., assignor to Marchant Calculating Machine Company, a corporation of California

Application November 10, 1931, Serial No. 574,100

5 Claims. (Cl. 235—79)

The present invention relates to calculating machines, and particularly to factor entering means therefor. The invention is particularly adapted for use in any calculating or adding machine in which values are entered by suitable means such as numeral keys or angularly adjustable levers.

It is an object of the invention to provide means for entering a plural digit number into a machine by manipulation of a single controlling means.

Another object of the invention is the provision of means for differentially positioning a plurality of members in accordance with a selected one of a plurality of predetermined factors.

Another object of the invention is the provision of a manipulative means which may be adjusted to a plurality of positions to set a corresponding number of predetermined factors into the machine.

Other objects will appear as this description progresses.

The machine embodying the present invention is of the general type shown in the patent to Friden No. 1,643,710 dated September 27th 1927, and the application of Friden No. 252,175 filed February 6th 1928, to which reference is hereby made for disclosure of a complete calculating machine including mechanisms not specifically described herein. It is to be understood, however, that although the invention is shown applied to a machine of the general type shown in said patent, it is manifest that the invention is applicable in any machine having a differentially set selecting mechanism or any suitable form of factor entering means.

The invention possesses a plurality of advantageous features, some of which will be set forth in full in the following description, and while the preferred construction thereof is shown in the drawings accompanying said description, it is understood that the invention is capable of modification within the scope of the claims.

In the accompanying drawings:

Figure 1 is a plan view of a calculating machine embodying the present invention disclosing the various manipulative controls for setting the machine for various calculations and initiating operation thereof.

Figure 2 is a longitudinal sectional looking from the left showing the numeral keys and the differential mechanism settable thereby.

Figure 3 is a left side elevation of the machine showing in section the unitary controlling means for selectively entering a plurality of plural digit factors.

Figure 4 is a transverse section showing the controlling means, the factor entering cams, and the differentially settable bars controlled thereby.

Figure 5 shows detail views of the factor entering cams.

Calculating machines and adding machines have heretofore been provided with means for setting a plural digit factor into the machine upon manipulation of a single controlling member such as a depressible key, such a machine being disclosed in the application of Friden No. 325,555, filed December 12th, 1928, which discloses a plurality of depressible fraction keys which are adapted to control a plurality of the differentially settable selecting bars disclosed therein.

The present invention contemplates the provision of means for entering a predetermined plural digit factor in the machine such as a decimal fraction, an interest figure, pi, or any other predetermined number which may be desired to be used in a calculation. The specific form of the invention disclosed herein is adapted for figuring interest using the following factors: the principal, the number of days, and the amount of the interest, the yearly basis for the number of days being taken as 360.

In solving a problem of such nature, the following method may be used: the principal is multiplied by the number of days, the result obtained being used as a dividend. The divisor is set in the machine by moving the manipulative means opposite the marked interest rate, and the process of division is performed, the amount of the interest appearing in the quotient register. The number which is entered by the interest setting member is the reciprocal of the quotient of the interest divided by 360. Thus, by interchanging the factors, a method of solving the problem is obtained which adapts itself readily to a mechanical simplification of the method of the setting up of the problem in the machine.

Figure 1 discloses a plan view of a calculating machine disclosing the various operation controls including the numeral keys 315 for entering values in the machine, the plus key 200, the minus key 220, the multiplier keys 730, the division lever 600, the clear keys 450 and 475 for clearing the accumulator register 400 and the counter register, respectively, and the lever 150 which controls the direction of rotation of the revolutions counter actuator with respect to the main actuator. No further description of the mechanism controlled thereby will be given, except insofar as the same is necessary for an understanding of the instant invention.

Selection of values in the instant machine is effected by depressing the desired numeral key 315 (Figure 2). Said numeral keys are mounted between a cover strip 314 and a strap attached thereto, and are normally held in raised position by compression springs 316. Suitable lugs 315A are adapted upon depression of the key to cam a latching slide 317 against the tension of compression spring 318, and upon movement beneath said slide, to latch the key in depressed position.

The numeral keys from 1 to 6 are adapted to depress a lever 312 pivoted to a depending ear from the supporting strap. Said lever is provided with a slot in which engages a pin 311A secured to the selecting bar 311, so that rocking of the lever 312 causes a corresponding rocking of the lever 311. The 7, 8, and 9 keys are adapted to act directly upon the selecting bar 311. The bar 311 rocks a bellcrank lever 308, said lever being provided with a rack 307 meshing with a gear secured to the selecting element 305 which is thereby differentially positioned upon depression of the numeral key. The selecting bellcrank 308 is normally held in its zero position by a spring 310 which serves to rock said lever against a stop pin 308C.

Suitable means are provided for locking the element in adjusted position upon rotation of the actuator, said means comprising a cam 843, lever 842 which rocks shaft 841 and thereby moves locking dog 840 into mesh with an arcuate rack on said selecting element 305. The mechanism controlled by the selecting element 305 is fully described in the above-mentioned patent to Friden, and reference is hereby made to said patent for a complete disclosure of the same.

Means are provided for setting a plurality of the differentially settable elements to respective predetermined positions upon selective manipulation of a controlling member. Said means comprises the cams 350—354 (Figures 4 and 5) which are secured to a shaft 355 journaled in suitable uprights 356 from the base plate. Said cams are disposed over and adapted to cooperate respectively with cam lugs 350A—354A secured to the selecting bars 311 in the five lowest orders. Said cams are adjustable through a plurality of angular positions to correspondingly set the selecting bars to certain predetermined positions, depending upon the factors which are desired to be entered.

Said cams 350—354 being secured to the shaft 355 are rotated in unison through the same angular distance upon movement of said shaft, and said cams are provided with rises of varying radial length at corresponding angular intervals about their periphery. The values in the present instance are determined from the following table, which values have been calculated for interest rates at ½% intervals from 4% to 8%, upon a 360 day yearly basis:

Percent	350	351	352	353	354
4	9	0	0	0	0
4½	8	0	0	0	0
5	7	2	0	0	0
5½	6	5	4	5	5
6	6	0	0	0	0
6½	5	5	3	8	5
7	5	1	4	2	8
7½	4	8	0	0	0
8	4	5	0	0	0

As shown in Figure 5, when the cam 350 is set to its I position by means to be described hereinafter, the radial length of the cam rise at such position causes a depression of the associated selecting bar 311 through nine steps of movement, while the corresponding positions of cams 351—354 cause no depression of the associated selecting bars as the cam rises thereof at that angular adjustment correspond to zero. The radial distances of the cam rises in the II position of the cams is such that the cam 350 will depress the associated selecting bar through 8 increments of movement while cams 351—354 remain ineffective. In the VI position of the cams, cam 350 depresses the corresponding selecting bar through five increments of movement, cam 351 its associated bar through five increments, cam 352 its associated bar through three increments, cam 353 its associated bar through eight increments, and cam 354 its associated bar through five increments.

The remaining positions of angular adjustment of the cams cause corresponding depressions of the associated selecting bars through the desired increments of movement to set the desired value. It is obvious that these values can be determined at any desired figure for interest rates as in the instant case, for decimal fractions, or for numerical constants, such as pi, etc.

As shown in Figures 3 and 4, a gear 357 is secured to the left end of shaft 355, and is adapted to mesh with teeth provided on the left upper side of a rack 358, said rack being slidably supported by rollers 359 engaging in slots formed in said rack. Said rack 358 is also provided with a series of teeth near the right end thereof which are adapted to mesh with a segmental gear 360 formed on a circular flange of a lever 361. The arrangement is such that angular adjustment of lever 361 about its supporting shaft 362 causes a corresponding movement of shaft 355 and cams 350—354 by means of rack 358.

As shown in Figures 1 and 3, the lever 361 is capable of adjustment from a zero position to nine set positions corresponding to the nine angular positions of the cams 350—354, said positions corresponding to interest rates from 4% to 8% at ½% intervals. The lever 361 is provided with a spring pressed plunger 363 having a laterally extending pin 364 thereon which is adapted to register with a series of notches 365 corresponding to the various angular adjustments of said lever, and being adapted to hold said lever in its adjusted position. A suitable pointer 366 is provided which is adapted to indicate interest rates on a suitable scale as shown in Figure 1.

Operation

The operation can best be understood, perhaps, in connection with the solution of a problem such as finding the amount of interest on $500.00 for 160 days at 5½%.

The principal, 500, is multiplied by 160, and the value entered into the accumulator 400, the carriage being positioned so that the first, or highest, order of the dividend is in alignment with the sixth order actuating unit. The lever 361 is then moved until the pointer 366 is opposite the interest rate 5½%, as shown in Figure 1. This operation rotates the shaft 355 and positions the cams 350–354 inclusive, so that in the first or lowest five orders of the actuator the number 65455 is entered. The division lever is then moved to the front of the machine, and the ensuing division operation gives us the result 12.222 in the revolutions counter, such number being the amount of the interest. The placing of the decimal point is

determined in the usual manner to ascertain the amount in dollars, $12.22.

I claim:

1. In a calculating machine, differentially settable mechanism and unitary controlling means therefor selectively operable to set any one of a plurality of predetermined plural digit factors into said mechanism.

2. In a calculating machine having a plurality of selecting elements, differential mechanism associated with each of said selecting elements and unitary manipulative means for setting a plurality of said mechanisms to any one of a plurality of predetermined values.

3. In a calculating machine, differentially settable mechanism and unitary controlling means therefor selectively operable to set any one of a plurality of predetermined plural digit factors into said mechanism including a plurality of related camming members.

4. In a calculating machine, a plurality of selecting elements, a differentially movable member associated with each of said elements for controlling the adjustment thereof, a plurality of related camming members each associated with one of said differentially movable members, and a single manually operable member settable to different positions to vary the action of said camming members upon the differentially movable members to set any of a series of predetermined values into the selecting elements.

5. In a calculating machine, a plurality of selecting elements, a differentially movable member associated with each of said elements for controlling the adjustment thereof, a plurality of related camming members each associated with one of said differentially movable members and adapted for angular adjustment, and means for varying the angular adjustment of said camming members to set any of a series of selected predetermined values into said selecting elements.

CARL M. F. FRIDEN.