April 5, 1949. C. D. ANDERSON 2,466,350

BABY'S SEAT AND TABLE

Filed June 19, 1947 2 Sheets-Sheet 1

FIG. 1

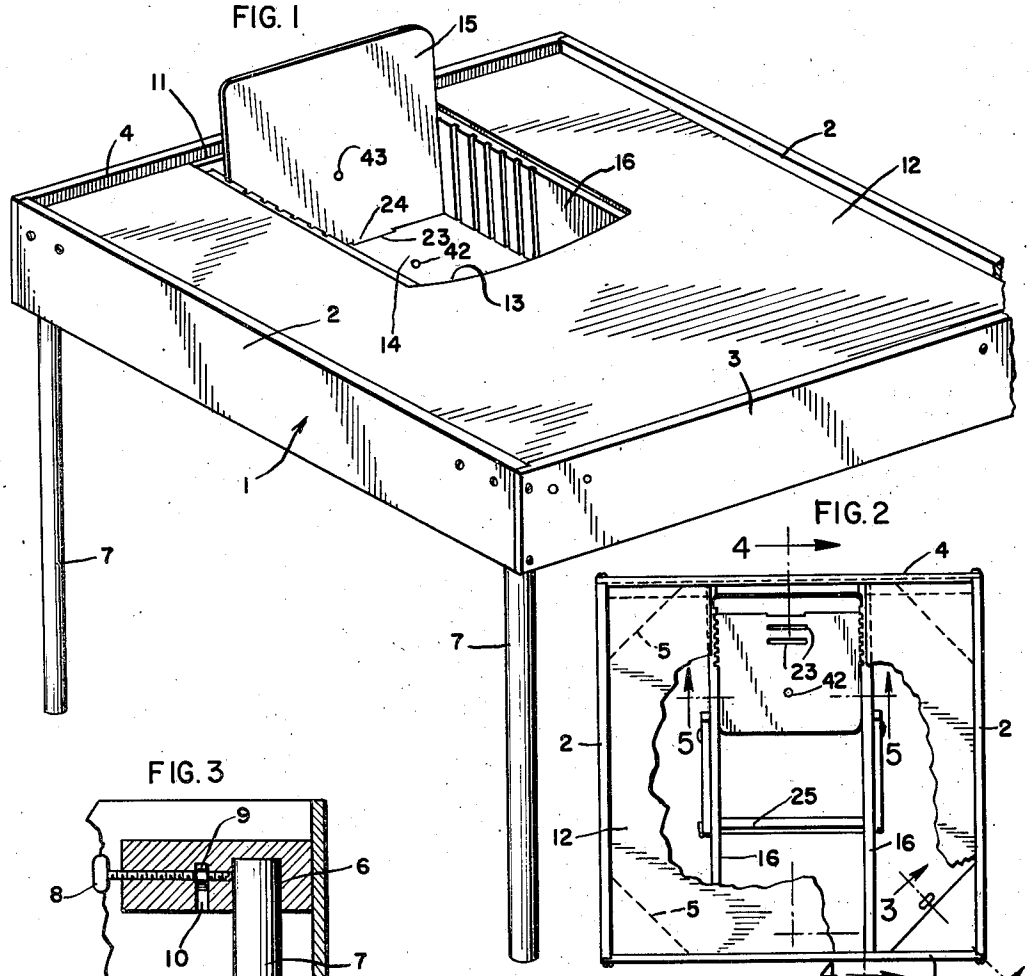


FIG. 2




FIG. 3




FIG. 4

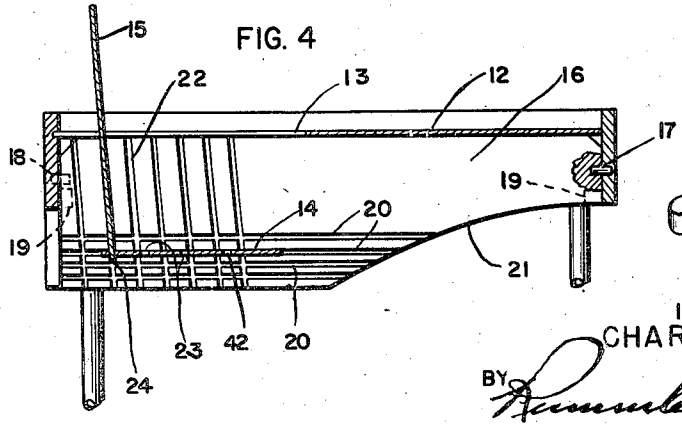


FIG. 7

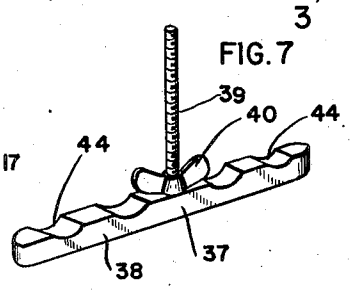


INVENTOR
CHARLES D. ANDERSON,
BY Rummler & Rummler & Shaw
ATTORNEYS

April 5, 1949. C. D. ANDERSON 2,466,350

BABY'S SEAT AND TABLE

Filed June 19, 1947 2 Sheets-Sheet 2

FIG. 5

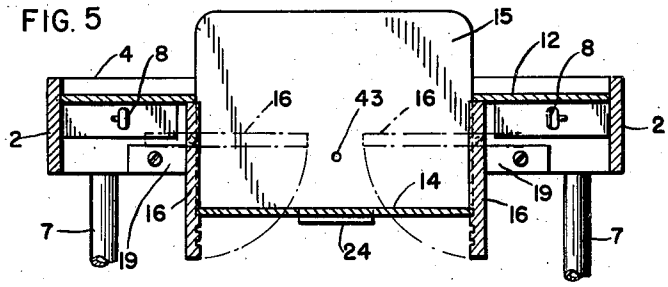


FIG. 6

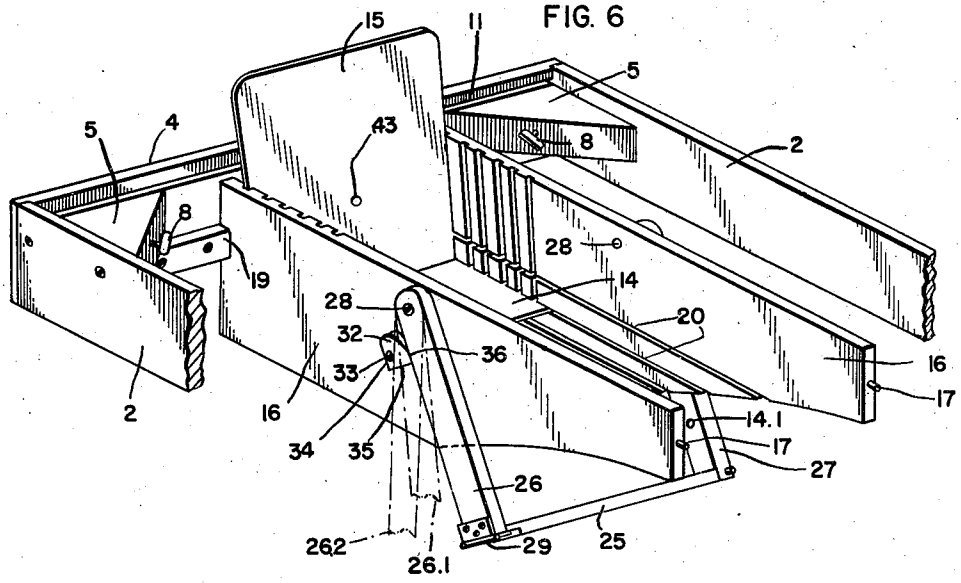


FIG.9

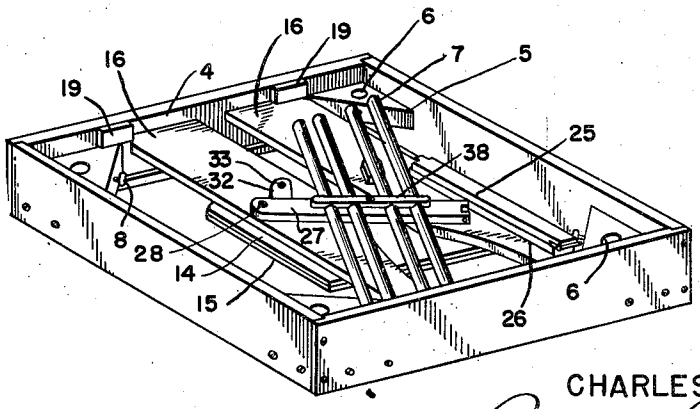


FIG.8

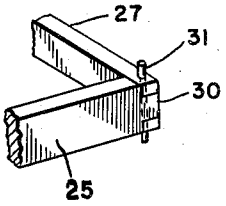


INVENTOR
CHARLES D. ANDERSON,
BY Rummler, Rummler & Snow,
ATTORNEYS

Patented Apr. 5, 1949 2,466,350

# UNITED STATES PATENT OFFICE

2,466,350

## BABY'S SEAT AND TABLE

Charles D. Anderson, Chicago, Ill.

Application June 19, 1947, Serial No. 755,782

8 Claims. (Cl. 155—123)

1

This invention relates to folding table constructions and particularly to the structure of a combined baby's seat and table.

The main objects of this invention are to provide an improved construction for a child's seat and table which can be readily collapsed for compact storage and yet is practically devoid of movable parts which can be shifted by its occupant and which lead to accidental tipping or collapse of the table; and to provide an improved form and construction of the seat members of such a device so that they can be readily adjustable to accommodate the growth of the child and so that when they are set up for use, they will have an interlocking relation which prevents relative movement of parts and likelihood of injury to the occupant.

A specific embodiment of this invention is shown in the accompanying drawings in which:

Figure 1 is a perspective view showing the external appearance of the combined seat and table.

Fig. 2 is a top plan drawn to a smaller scale, with parts of the table top broken away to show some of the structure below.

Fig. 3 is a sectional detail of the mounting for the table legs taken on the line 3—3 of Fig. 2.

Fig. 4 is a vertical section taken on the line 4—4 of Fig. 2.

Fig. 5 is a section taken on the line 5—5 of Fig. 2.

Fig. 6 is a fragmentary perspective view with the top panel of the table removed and showing the relation of the parts that are below the table top, when these are in the position for use.

Fig. 7 is a detail of a clamp for securing the parts in their collapsed position.

Fig. 8 is a fragmentary detail of a fastening at one end of the foot rest.

Fig. 9 is a perspective view of the device, shown bottom up, as it appears when the parts are in their collapsed position for storage or shipment.

In the form shown in the drawings, the table comprises a rectangular top frame 1 comprising opposed side bars 2, a front bar 3 and rear bar 4 connected end to end at right angles to each other and with their joints reinforced by substantial, triangular corner blocks 5. These blocks have blind socket bores 6 extending upwardly from the bottoms thereof to receive the table legs 7 which are each fixed in place by means of a wing-headed set screw 8 threaded through a nut 9 seated in a socket 10, as illustrated in Fig. 3.

The rear bar 4 has a slot 11 flush with the tops of the adjacent reinforcing blocks 5 to receive the

2

corresponding edge of the table top panel 12 which is proportioned to rest on the corner blocks 5, with its edges abutting the inside faces of the top frame bars 2 and 3. This table top is provided with a seat opening 13 adjacent its rear edge and of suitable dimensions to permit a small child to be placed upon the seat below.

The baby's seat comprises a seat panel 14 supported at an appropriate distance below the level of the table top 12 and a back rest panel 15 which extends upwardly through the opening 13. The seat mounting comprises a pair of side members 16, preferably in the form of wide boards, normally spaced apart in parallel vertical planes with their upper edges appropriately positioned to support the top panel 12 at the sides of the opening 13.

The side members 16 are preferably proportioned to span the interior of the top frame 1 and are pivotally connected to the top frame bars 3 and 4 by means of axially alined dowels 17 and 18, respectively, on which the side members 16 may be swung from the normal upright position in which they are shown in Fig. 6 to a retracted position parallel with the top panel, as indicated by broken lines in Fig. 5, and as shown in Fig. 9.

Blocks 19 on the frame bar 4 act as limit stops to prevent the side members 16 from swinging on their pivotal axes beyond the vertical positions in which they are shown in Figs. 5 and 6.

The side members 16 are each provided with a plurality of horizontal grooves 20 in their opposed faces, in which the side edges of the seat panel 14 are inserted in tongue-and-groove relation, as will be understood from Figs. 4 and 6, the panel 14 being slidable horizontally in such grooves and being insertable in any pair of such grooves at the cut-away front edge 21 of the side members 16. Similarly, the side members 16 are provided with a plurality of respectively matching opposed pairs of vertically disposed grooves 22 which provide similar slidable tongue-and-groove connections between the back rest panel 15 and the side members 16 for various positions of horizontal adjustment of the back rest, as will be understood from Fig. 4.

The seat panel 14 is provided with one or more transverse sockets or slots 23 and the back panel 15 is provided with a tongue 24 adapted to be seated in one of said slots 23 to adjust the front to back length of the seat.

By providing a plurality of horizontal grooves 20, the elevation of the seat 14 may be adjusted to suit the growth of the child. The multiple grooves 22 in the side member 16 likewise permit

of adjustment of the back rest panel 15 and the tongues 24 and slots 23 provide an interlock between these sliding panels which prevents accidental shifting of the panel 14 through the movements of the child's body.

A footrest 25 is carried in suitable position by a pair of arms 26 and 27 which are pivotally mounted at 28 on the outer sides of the side members 16. The footrest 25 is preferably hinged at 29 to the arm 26 and is mortised at 30 to the arm 27 where it is locked by a pin 31. In this way the footrest is securely attached to the arms 26 and 27 when in use but may be readily disconnected from the arm 27 and folded back against the arm 26 when the table is collapsed for storage.

Blocks 32 of cam formation are pivoted on the side bars 16 at 33 and are provided with a plurality of flat surfaces 34, 35 and 36 on their peripheries at different distances from the pivot 33 so as to provide selective angular positions for the footrest 25 with respect to the seat 14. By means of these angular adjustments of the footrest and the horizontal and vertical adjustment of the seat and back rest, the seating devices are readily adjustable for the size and comfort of the child.

By providing a substitute table top panel, not shown, which is not provided with an opening 13, as shown in the table top panel 12, the table is adapted for other purposes than the accommodation of a baby on the seat.

At times when the seat is not in use and when the table is to be put to such other uses, as aforesaid, the seating equipment may be folded into the interior of the top frame so as to be out of the way and out of sight behind the side bars of the table top frame. To bring the parts into such folded position, the back rest 15 and seat panel 14 are slid out of their grooves in the side members 16 and the side members are swung inwardly and upwardly on their pivoted axes 17 and 18 to the position in which they are shown by broken lines in Fig. 5 and by full lines in Fig. 9, after the footrest 25 is disconnected from the arm 17 and folded backward against the arm 26 and these arms are swung into appropriate positions on their pivotal connections to the side members 16. When the side members are thus retracted, there is room within the space enclosed by the top frame side bars for the panels 14 and 15 to be laid above the side members 16 and below the top panel, as will be understood from Fig. 5.

A clamping device 37, illustrated in Figs. 7 and 9, is provided for securing the parts in this folded position. This clamp comprises a head bar 38, a threaded shank 39 and a wing nut 40 which cooperate with the arm 27 and the seat and back panels 14 and 15 to hold the parts in their folded positions. For this purpose, the arm 27 is provided with an aperture 41, the seat panel is provided with an aperture 42 and the back panel with an aperture 43 to receive the shank 39.

When the device is conditioned for storage, the legs 7 are released by the clamps 8 and withdrawn from the sockets in the corner pieces 5 and may be held in the position in which they are shown in Fig. 9 by the clamp 37, the head bar 38 of the clamp being provided with notches or cross grooves 44 to embrace and hold the table legs 7, as shown in Fig. 9.

Although but one specific embodiment of this invention is herein shown and described, it will be understood that numerous details of the structure shown may be altered or omitted without departing from the spirit of the invention as defined by the following claims:



I claim:

1. A baby's seat and table, comprising a top frame, a pair of spaced side members spanning a seat space in said frame, means pivotally connecting either end of said members to said frame whereby each of said side members may be swung on a longitudinal axis from a normal upright position to one of approximate planar parallelism with the plane of said top frame, limit stops for said side members at their normal upright positions, a seat member having generally horizontally sliding interfitting relation substantially parallel to the longitudinal axes of said side members below the pivot points of said members when in their said upright positions and operating to hold said side members against said limit stops.

2. A baby's seat and table, comprising a top frame, a pair of spaced side members spanning a seat space in said frame, means pivotally connecting either end of said members to said frame whereby each of said side members may be swung on a longitudinal axis from a normal upright position to one of approximate planar parallelism with the plane of said top frame, limit stops for said side members at their normal upright positions, a seat member having generally horizontally sliding interfitting relation substantially parallel to the longitudinal axes of said side members below the pivot points of said members when in their said upright positions and operating to hold said side members against said limit stops, and a back rest member having generally vertical sliding interfitting tongue and groove connection to said side members, said seat member having a socket, and said back rest member having a tongue to engage said socket and lock said seat member in a fixed position in relation to said side members.

3. A baby's seat and table, comprising a top frame, a pair of spaced side members spanning a seat space in said frame, means pivotally connecting either end of said members to said frame whereby each of said side members may be swung on a longitudinal axis from a normal upright position to one of approximate planar parallelism with the plane of said top frame, limit stops for said side members at their normal upright positions, and a seat member removably interposed between said side members below the pivot points of said members and operative in such interposed position to hold said side members against said limit stops.

4. A baby's seat and table, comprising a top frame, a pair of spaced side members spanning a seat space in said frame, means pivotally connecting either end of said members to said frame whereby each of said side members may be swung on a longitudinal axis from a normal upright position to one of approximate planar parallelism with the plane of said top frame, limit stops for said side members at their normal upright positions, and a seat member removably interposed between said side members below the pivot points of said members, means on said side members to support said seat member at different elevations, and said seat member being operative in such interposed positions to hold said side members against said limit stops in each such position.

5. A baby's seat and table, comprising a top frame, a pair of spaced side members spanning a seat space in said frame, means pivotally connecting either end of said members to said frame whereby each of said side members may be swung

on a longitudinal axis from a normal upright position to one of approximate planar parallelism with the plane of said top frame, limit stops for said side members at their normal upright positions, and a seat member removably interposed between said side members, means on said side members to support said seat member at different elevations below the pivot points of said members and different front-to-back positions, and said seat member being operative in each such position to hold said side members against said limit stops.

6. A baby's seat and table, comprising a top frame, a pair of spaced side members spanning a seat space in said frame, means pivotally connecting either end of said members to said frame whereby each of said side members may be swung on a longitudinal axis from a normal upright position to one of approximate planar parallelism with the plane of said top frame, limit stops for said side members at their normal upright positions, a seat member removably interposed between said side members below the pivot points of said members and operative in such interposed position to hold said side members against said limit stops, a footrest, a pair of arms pivoted on said side arms and carrying said footrest, said footrest being hinged to fold against one of said arms and being removably attached to the other, whereby said footrest and arms may be retracted with said side members into the interior of said top frame when said seat member is withdrawn from said side members.

7. A baby's seat and table, comprising a top frame, a pair of spaced side members spanning a seat space in said frame, means pivotally connecting either end of said members to said frame whereby each of said side members may be swung on a longitudinal axis from a normal upright position to one of approximate planar parallelism with the plane of said top frame, limit stops for said side members at their normal upright positions, said side members having a series of horizontal grooves at corresponding elevations below the pivot points of said members in their opposed faces when occupying their normal upright positions, a seat panel having marginal tongue portions on their opposite sides for slidably engaging the respective opposed grooves in said side members, said seat panel operating to hold said side members against said limit stops.



8. A baby's seat and table, comprising a top frame, a pair of spaced side members spanning a seat space in said frame, means pivotally connecting either end of said members to said frame whereby each of said side members may be swung on a longitudinal axis from a normal upright position to one of approximate planar parallelism with the plane of said top frame, limit stops for said side members at their normal upright positions, said side members having a series of horizontal grooves at corresponding elevations in their opposed faces below the pivot points of said members when occupying their normal upright positions, a seat panel having marginal tongue portions on their opposite sides for slidably engaging the respective opposed grooves in said side members, said seat panel operating to hold said side members against said limit stops, said side members each having a series of grooves in its inner face transverse to its horizontal grooves and respectively registering with such transverse grooves in the other side member, and a back rest panel having side marginal tongue portions slidably fitting pairs of opposed transverse grooves of said side members, said backrest panel having a depending tongue at the lower end thereof, and said seat panel having a series of sockets coacting with said tongue of said backrest panel for selective adjustment of the front to back position of said seat panel.

CHARLES D. ANDERSON.


**REFERENCES CITED**

The following references are of record in the file of this patent:

UNITED STATES PATENTS

| Number | Name | Date |
|---|---|---|
| 1,465,291 | Walker | Aug. 21, 1923 |
| 2,397,528 | Brandwin | Apr. 2, 1946 |

FOREIGN PATENTS

| Number | Country | Date |
|---|---|---|
| 188,716 | Germany | Sept. 12, 1907 |