US00D346171S

United States Patent [19]

Ratcliffe

[11] Patent Number: Des. 346,171

[45] Date of Patent: ** Apr. 19, 1994

[54] TELEPHONE HANDSET

[75] Inventor: **William R. Ratcliffe**, Thousand Oaks, Calif.

[73] Assignee: **Marpole International Inc.**, Kowloon, Hong Kong

[**] Term: **14 Years**

[21] Appl. No.: **780**

[22] Filed: **Oct. 26, 1992**

[52] **U.S. Cl.** **D14/248**

[58] **Field of Search** 379/2, 33, 428, 419, 379/420, 440, 58-61; D14/137, 138, 140, 142, 147, 148, 149-151, 240, 241, 247, 248; D18/6, 7

[56] **References Cited**

U.S. PATENT DOCUMENTS

D. 309,726	8/1990	Sasaki et al.	D14/248
D. 312,636	12/1990	Arm	D14/248 X
D. 330,024	10/1992	Peersman	D14/147
4,736,411	4/1988	Chan	D14/142 X

FOREIGN PATENT DOCUMENTS

0389676	10/1990	European Pat. Off.	D14/8

OTHER PUBLICATIONS

Swisstel Brochure ©1988, handset shown.

Primary Examiner—Nelson C. Holtje

Assistant Examiner—Jeffrey Asch

Attorney, Agent, or Firm—Ellsworth R. Roston; Charles H. Schwartz

[57] **CLAIM**

The ornamental design for a telephone handset, as shown and described.

DESCRIPTION

FIG. **1** is a perspective view of a telephone handset showing my new design with the receiver and speaker portions in a first and closed position;

FIG. **2** is a front elevational view of the telephone handset with the receiver and speaker portions in the first or closed position;

FIG. **3** is a side elevational view of the telephone handset with the receiver and speaker portions in the first or closed position;

FIG. **4** is a bottom plan view of the telephone handset;

FIG. **5** is a top plan view of the telephone handset;

FIG. **6** is a rear elevational view of the telephone handset with the receiver and speaker portions in the first or closed position;

FIG. **7** is a perspective view similar to that shown in FIG. **1** but with the speaker and receiver portions of the telephone handset in a second or extended position relative to each other; and,

FIG. **8** is a perspective view, similar to that shown in FIG. **7**, of a second embodiment of the telephone handset with the speaker and receiver portions in an extended relationship to each other.

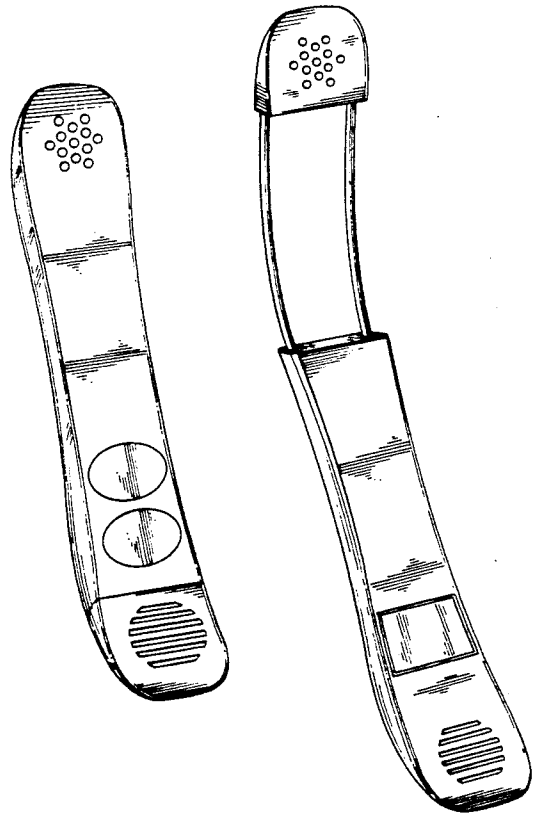

FIG. 1

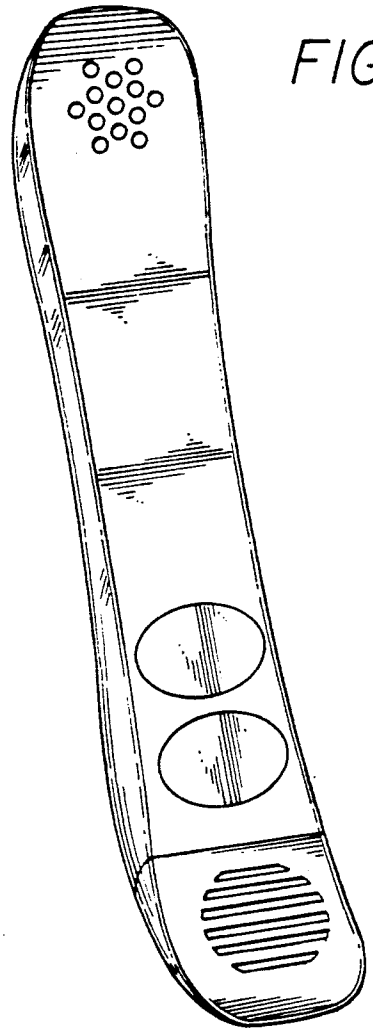

FIG. 3

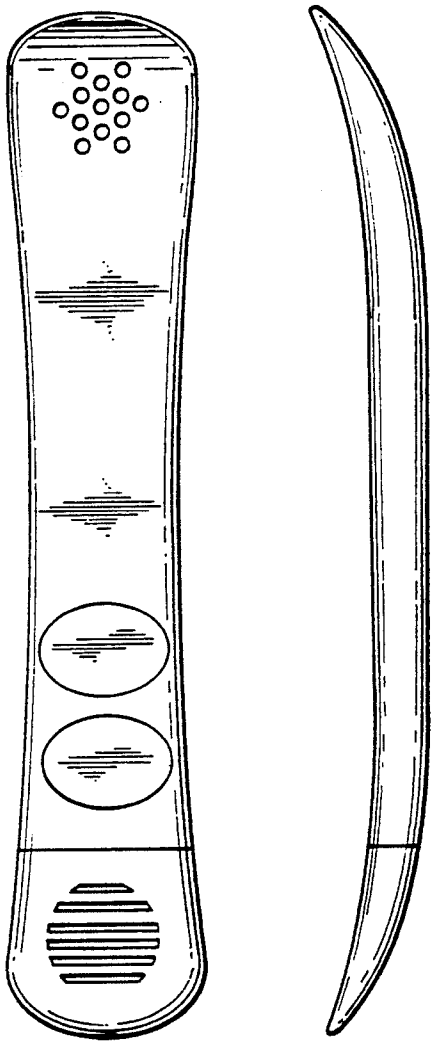

FIG. 2

FIG. 4



FIG. 5



FIG. 6

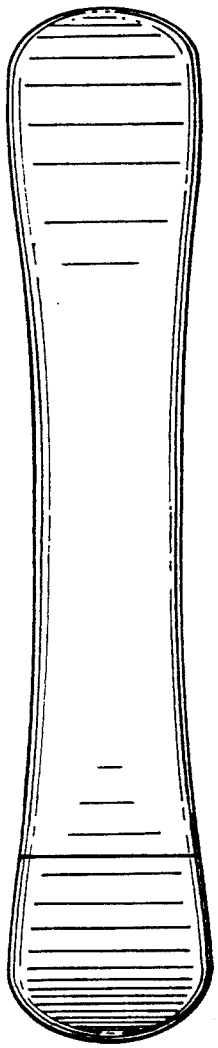

FIG. 7

FIG. 8

