I. L. POMEROY.

COMBINATION BLANKING AND DRAWING AND FLUID EXPANSION DIES.

APPLICATION FILED JULY 14, 1916.

1,199,414. Patented Sept. 26, 1916.

3 SHEETS—SHEET 1.

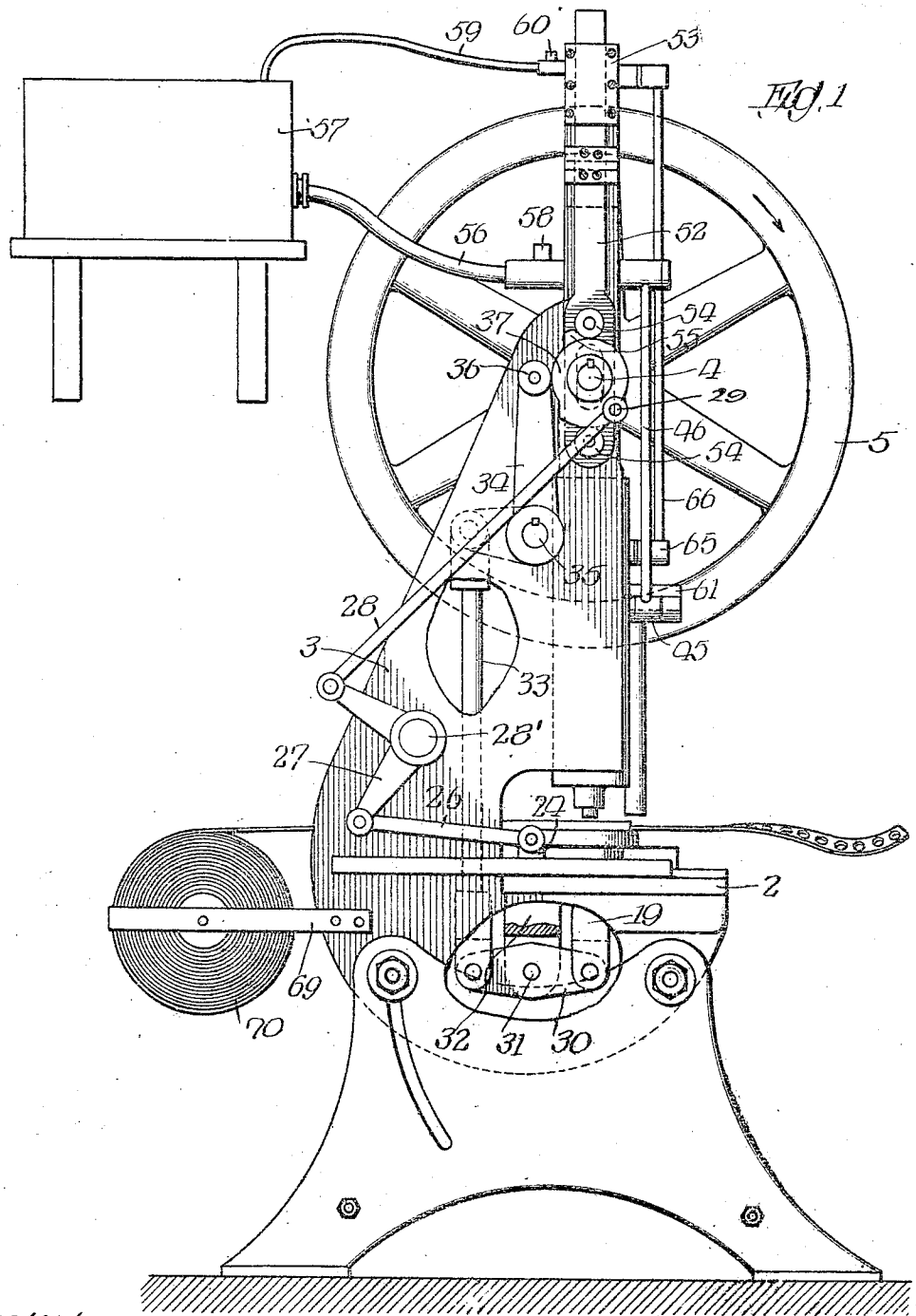

Witnesses:

Ernest H. Merchant.

Inventor

Irving L. Pomeroy

By W. F. Bilmeyer

I. L. POMEROY.

COMBINATION BLANKING AND DRAWING AND FLUID EXPANSION DIES.

APPLICATION FILED JULY 14, 1916.

1,199,414. Patented Sept. 26, 1916.

3 SHEETS—SHEET 2.

Fig. 2

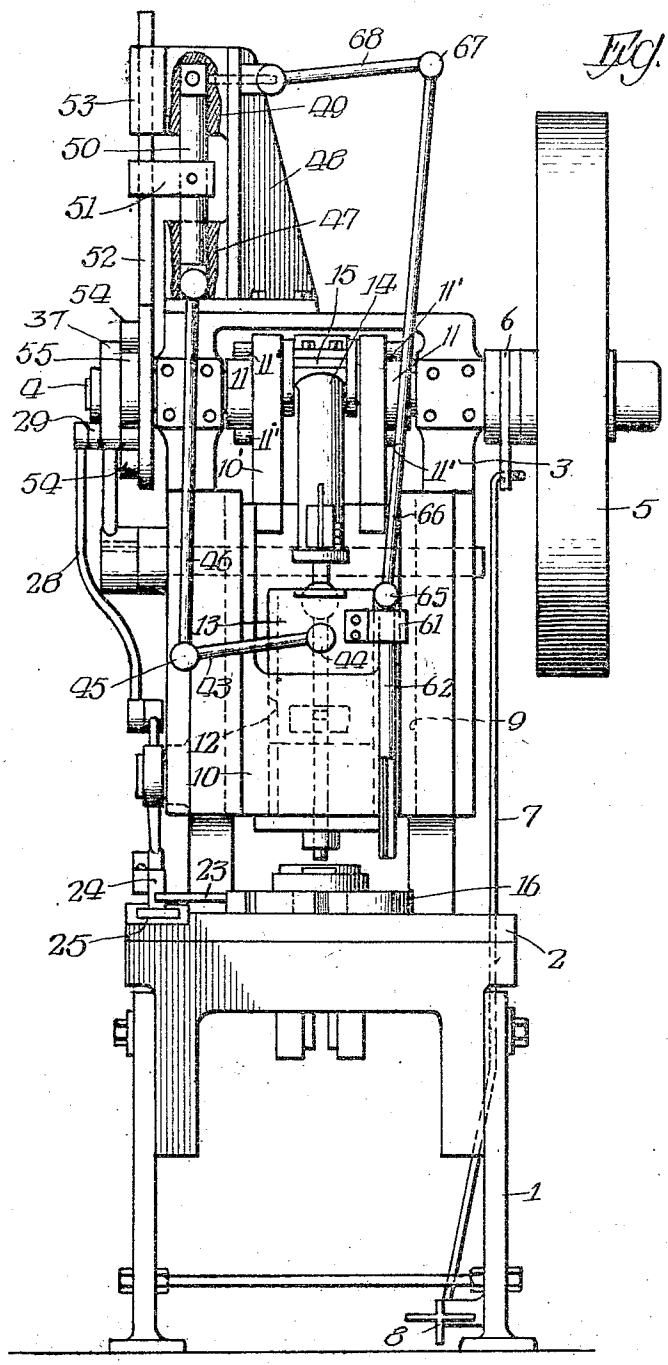

Witnesses:
S. G. Barrett
Ernest H. Merchant.

Inventor
Irving L. Pomeroy
By Wm. F. Bell
Attys.

I. L. POMEROY.

COMBINATION BLANKING AND DRAWING AND FLUID EXPANSION DIES.

APPLICATION FILED JULY 14, 1916.

1,199,414.

Patented Sept. 26, 1916.

3 SHEETS—SHEET 3.

Fig 3

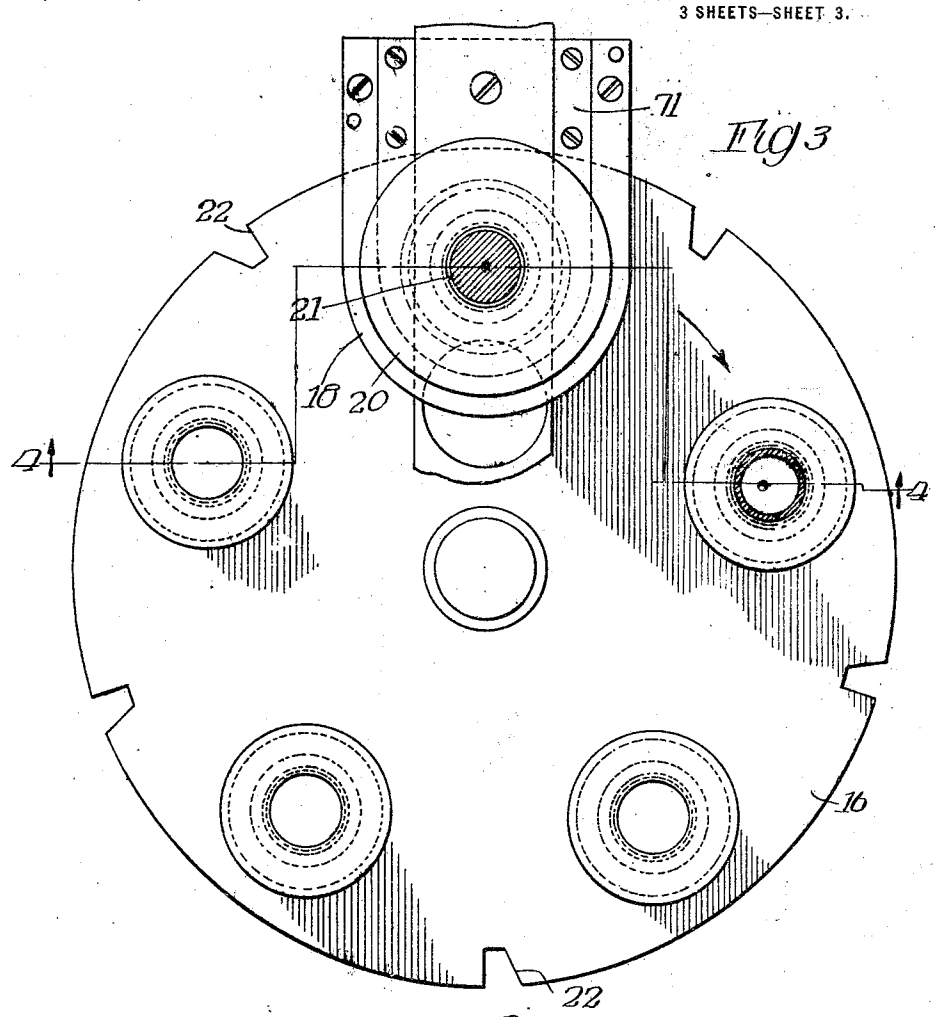

Fig. 4

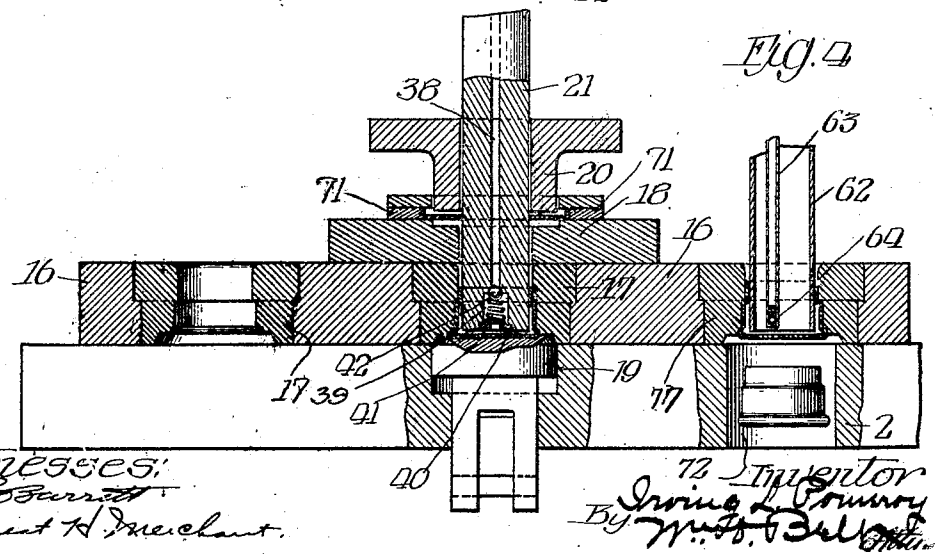

Witnesses:
S. B. Barrett
Ernest H. Merchant.

Inventor
Irving L. Pomeroy
By Wm. G. Bell & Co.
Attys.

UNITED STATES PATENT OFFICE.

IRVING L. POMEROY, OF CHICAGO, ILLINOIS.

COMBINATION BLANKING AND DRAWING AND FLUID-EXPANSION DIES.

1,199,414. Specification of Letters Patent. Patented Sept. 26, 1916.

Application filed July 14, 1916. Serial No. 109,238.

To all whom it may concern:

Be it known that I, IRVING L. POMEROY, a citizen of the United States, residing at Chicago, in the county of Cook and State of Illinois, have invented certain new and useful Improvements in Combination Blanking and Drawing and Fluid-Expansion Dies, of which the following is a specification.

This invention relates to blanking, drawing, and fluid-expansion dies and has for its object of the provision of a die adapted in a single operation to blank, draw and expand articles of sheet metal.

A further object of my invention is the provision of a die in which a drawn metal blank is subjected to the expansive action of fluid pressure to produce therein ornamental or other effects which can not be obtained by the drawing operation alone.

A still further object of my invention is the provision of a die of the character described, involving a minimum number of simple and relatively inexpensive parts and adapted to accomplish the desired result in an efficient and economical manner.

Further objects and advantages of my invention will be apparent as it is better understood by reference to the following specification when read in connection with the accompanying drawing, illustrating a preferred embodiment thereof, in which—

Figure 1 is a side elevation of a machine according to my invention; Fig. 2 is a front elevation thereof; Fig. 3 is a detail plan view of a die table with the coöperating punch in section, and Fig. 4 is a vertical section on the line 4—4 of Fig. 3.

Referring to the drawing, 1 indicates an under frame adapted to support the bolster 2 and the upper frame 3. A shaft 4 is journaled in suitable bearings in the upper frame 3 and is provided with a pulley and fly wheel 5 loosely mounted thereon. A clutch 6 is adapted to connect the pulley and fly wheel 5 to the shaft 4 and is controlled through the medium of a rod 7 by a treadle 8 pivotally mounted on the frame 1 adjacent the floor upon which the frame rests.

The upper frame 3 is provided with guideways 9 in which a slide 10 is mounted. Extensions 10′ of the slide 10 are provided with rollers 11′ coöperating with a pair of cams 11 secured to the shaft 4. An inner slide 13 is mounted in the guideways 12 on the slide 10 and is connected by a member 14 to a crank 15 on the shaft 4. As the shaft 4 rotates, therefore, the slides 10 and 13 are moved vertically independently of each other.

A circular table 16 is rotatably mounted on the bolster 2 and is provided with a plurality of matrix dies 17 in the form of rings, the inner peripheries of the rings having the desired form of the finished articles cut in intaglio therein. A blanking and drawing die 18 is secured to the bolster and positioned above one of the matrix dies 17. The matrix dies 17 are bottomless and a member 19 is provided which is adapted to close the bottoms of one of the matrix dies 17 as they are successively positioned beneath the slides 10 and 13 and the blanking and drawing die 18. The slide 10 carries a blanking punch 20 and the slide 13 carries the drawing punch 21, the punches 20 and 21 being adapted to coöperate with the blanking and drawing die 18 which is positioned beneath said punches.

The rotatable table 16 is provided on its periphery with a plurality of notches 22 corresponding to the number of dies 17 mounted therein. A dog 23 is mounted on a slide 24 operating in a groove 25 in the bolster adjacent the periphery of the table 16 and is adapted to successively engage the notches 22 to rotate the table. A link 26 connects the slide 24 to one arm of the bell-crank 27 pivotally mounted at 28′ on the upper frame 3 and a link 28 connects the other arm of the bell-crank 27 to a crank 29 on the shaft 4.

The member 19 is connected at one end of a rocking beam 30 pivotally mounted at 31 in a support 32 depending from the bed 2 and the opposite end of the rocking beam 30 is connected by a link 33 to one arm of the bell-crank lever 34 pivotally mounted at 35 on the upper frame 3. The opposite end of the bell-crank lever 34 is provided with a roller 36 adapted to coöperate with a cam 37 on the shaft 4.

The drawing punch 21 is provided with a duct 38 which is enlarged at 39 adjacent the end of the punch and closed by a threaded plug 40. A spiral spring 41, resting on the plug 40 supports a ball 42 in position to close the end of the duct 38 except when fluid is forced thereto under pressure sufficient to overcome the resiliency of

the spring 41. A pipe 43 is connected by a flexible coupling 44 to the duct 38 and by a flexible coupling 45 to a pipe 46 leading to the interior of a cylinder 47 mounted on a bracket 48 on the top of the upper frame 3. A cylinder 49 is mounted on the bracket 48 above the cylinder 47. The cylinders 47 and 49 are provided with a common plunger 50 which is connected by a member 51 to a slide 52 mounted in a guide 53 and slotted at its lower end to embrace the shaft 4. The slide 52 is provided with rollers 54 engaging a cam 55 on the shaft 4 and as the cam rotates the slide 52 and consequently the plunger 50 is reciprocated.

The cylinder 47 is connected by a pipe 56 to a tank 57 adapted to contain a quantity of liquid, preferably water. A check valve 58 is provided in the pipe 56 to prevent the return of liquid drawn therefrom into the cylinder 47 by the action of the plunger 50. The cylinder 49 is connected by a pipe 59 to the tank 57 and a check valve 60 is provided in the pipe 59 to prevent the return of liquid forced from the cylinder 49 by the plunger 50.

A bracket 61 is mounted on the slide 13 and supports an ejector 62 spaced from the slide 13 sufficiently to engage an article in a die 17 at one side of the punch 21. A pipe 63 is disposed within the ejector 62 and is provided at its lower end with a check valve 64. The pipe 63 is connected by a flexible joint 65 to a pipe 66 which is in turn connected by a flexible joint 67 to a pipe 68. The pipe 68 is connected to the interior of the cylinder 49. A bracket 69 supports a roll 70 of sheet metal which may be fed in any suitable manner through the guides 71 which properly position the metal between the blanking and drawing die 18 and the blanking punch 20.

The operation of my invention will be readily understood from the following brief description thereof.

The sheet metal being arranged in the guides 71, power is applied to the shaft 4 which causes the slides 10 and 13 to descend. The blanking punch 20 first engages the metal and in coöperation with the blanking and drawing die 18 cuts therefrom a blank of the desired size and the drawing punch 21 descending draws the blank into a cup shape. The drawing punch 21 then forces the metal into the matrix die 17 and against the member 19 which has meanwhile been moved to position to close the bottom of the die 17 through the medium of the rocking beam 30 and its connection with the cam 37 on the shaft 4. When this has been accomplished the rotation of the cam 55 causes the plunger 50 to move downwardly, placing the liquid within the cylinder 47 under pressure so that it is forced through the pipes 46, 43 and the duct 38 to the interior of the formed blank, forcing the blank into engagement with the walls of the matrix die 17. The ball 42 prevents the escape of liquid from the duct 38 except when pressure is applied thereto by the plunger 50. Continued movement of the shaft 4 lifts the slides 10 and 13, withdrawing the blanking punch 20, the drawing punch 21 and the member 19 forming the bottom of the matrix die 17. As soon as the punches have been withdrawn the slide 24 is moved forwardly to rotate the table 16 through the medium of the dog 23. The table 16 is rotated in the direction of the arrow on Fig. 3 and the next succeeding matrix die 17 is thereby disposed in operative position while the matrix die 17 carrying the finished article is moved to a position above the opening 72 in the bolster 2. Upon the next downward movement of the slides 10 and 13 the ejector 62 is moved into engagement with the finished article in the die 17 as indicated in Fig. 4. The pipe 63 moves with the ejector 62 and through this pipe the liquid is withdrawn to the cylinder 49 which has been freed from liquid by the previous upper stroke of the plunger 50, the liquid having passed through the valve 60 and pipe 59 to the tank 57. The finished article is forced from the matrix die 17 by the ejector and the cycle of operations is thereby completed.

From the foregoing it will be readily understood that I have perfected a simple apparatus adapted to automatically blank, draw and expand sheet metal into articles of more or less irregular shape.

My machine is efficient and rapid in operation and is entirely automatic, requiring little or no attention from the operator.

Sheet metal articles may be formed in a press thus equipped with great rapidity and consequent low cost.

The press is adapted to form articles adapted to a wide variety of uses.

It will be readily apparent that various changes may be made in the form, construction and arrangement of the parts without departing from the spirit or scope of the invention or sacrificing any of its material advantages the form hereinbefore described being merely a preferred embodiment thereof.

I claim:

1. In a machine of the character described, the combination of superposed blanking and drawing and matrix dies, a member intermittently coöperating with said matrix die to close the bottom thereof, blanking and drawing punches, means for actuating said punches to coöperate with said dies, a duct in said drawing punch, and means for forcing liquid under pressure through said duct to expand a drawn blank into engagement with the walls of said matrix die.

2. In a machine of the character described,

the combination of a table, a plurality of matrix dies embodied therein, a blanking and drawing die, blanking and drawing punches, means for advancing said table to successively position one of said matrix dies beneath said punches, means for actuating said punches to coöperate with the set of dies when so positioned, a member movable to close the bottom of the matrix die, a duct in said drawing punch, and means for forcing liquid under pressure through said duct to expand a drawn blank into engagement with the walls of said matrix die.

3. In a machine of the character described, the combination of a table, a plurality of matrix dies embodied therein, a blanking and drawing die, blanking and drawing punches, means for advancing said table to successively position one of said matrix dies beneath said blanking and drawing die, means for actuating said punches to coöperate with the set of dies when so positioned, a member movable to close the bottom of the matrix die, a duct in said drawing punch, means for forcing liquid under pressure through said duct to expand a drawn blank into engagement with the walls of said matrix die, and means for automatically ejecting the expanded blank after the table has advanced.

4. In a machine of the character described, the combination of a table, a plurality of matrix dies embodied therein, a blanking and drawing die, blanking and drawing punches, means for advancing said table to successively position one of said matrix dies beneath said punches, means for actuating said punches to coöperate with the set of dies when so positioned, a member movable to close the bottom of the matrix die, a duct in said drawing punch, means for forcing liquid under pressure through said duct to expand a drawn blank into engagement with the walls of said matrix die, means for automatically ejecting the expanded blank after the table has advanced, and means for withdrawing liquid from the expanded blank before it is ejected.

5. In a machine of the character described, the combination of a rotatable table, a plurality of matrix dies embodied therein, a blanking and drawing die, blanking and drawing punches positioned above said blanking and drawing die, means for rotating said table to successively position one of said matrix dies beneath said punches, means for actuating said punches to coöperate with the set of dies when so positioned, a member movable to close the bottom of the matrix die, a duct in said drawing punch, and means for forcing liquid under pressure through said duct to expand a drawn blank into engagement with the walls of said matrix die.

6. In a machine of the character described, the combination of a rotatable table, a plurality of matrix dies embodied therein, a blanking and drawing die, blanking and drawing punches positioned above said blanking and drawing die, means for rotating said table to successively position one of said matrix dies beneath said punches, means for actuating said punches to coöperate with the set of dies when so positioned, a member movable to close the bottom of the matrix die, a duct in said drawing punch, a cylinder connected to said duct, means for supplying liquid to said cylinder, a plunger in said cylinder, and means for actuating said plunger to force liquid under pressure through said duct to expand a drawn blank into engagement with the walls of said matrix die.

7. In a machine of the character described, the combination of a rotatable table, a plurality of matrix dies embodied therein, a blanking and drawing die, blanking and drawing punches positioned above said blanking and drawing die, meaans for rotating said table to successively position one of said matrix dies beneath said punches, means for actuating said punches to coöperate with the set of dies when so positioned, a member movable to close the bottom of the matrix die, a duct in said drawing punch, a cylinder connected to said duct, means for supplying liquid to said cylinder, a plunger in said cylinder, means for actuating said plunger to force liquid under pressure through said duct to expand a drawn blank into engagement with the walls of said matrix die, and means for automatically ejecting the expanded blank after the table has been rotated to position the successive matrix die beneath said punches.

8. In a machine of the character described, the combination of a rotatable table, a plurality of matrix dies embodied therein, a blanking and drawing die, blanking and drawing punches positioned above said blanking and drawing die, means for rotating said table to successively position one of said matrix dies beneath said punches, means for actuating said punches to coöperate with the set of dies when so positioned, a member movable to close the bottom of the matrix die, a duct in said drawing punch, a cylinder connected to said duct, means for supplying liquid to said cylinder, a plunger in said cylinder, means for actuating said plunger to force liquid under pressure through said duct to expand a drawn blank into engagement with the walls of said matrix die, means for automatically ejecting the expanded blank after the table has been rotated to position the successive matrix die beneath said punches, and means operating with said ejector to withdraw liquid from the expanded blank before it is ejected.

9. In a machine of the character described, the combination of a rotatable table, a plurality of matrix dies embodied therein, a blanking and drawing die, blanking and drawing punches positioned above said blanking and drawing die, means for rotating said table to successively position one of said matrix dies beneath said punches, means for actuating said punches to coöperate with the set of dies when so positioned, a member movable to close the bottom of the matrix die, a duct in said drawing punch, a pair of opposed cylinders, one of which is connected to said duct, a plunger in said cylinders, means for supplying liquid to the cylinder connected to said duct, means for actuating said plunger to force liquid under pressure through said duct to expand a drawn blank into engagement with the walls of said matrix die and to simultaneously create a suction in the other cylinder, means for ejecting the expanded blank from said drawing die after the table has been rotated to position a successive set of dies beneath said punches, and a pipe connected to the suction cylinder and operating with said ejecting means to withdraw liquid from the expanded blank before it is ejected.

10. In a machine of the character described, the combination of a rotatable table, a plurality of matrix dies mounted thereon, a punch, means for rotating said table to successively position said dies beneath said punch, a member for closing the bottom of a matrix die when so positioned, means for actuating said punch to coöperate with the die, a duct in said punch, and means for forcing liquid under pressure through said duct to expand a drawn blank into engagement with the walls of said matrix die.

11. In a machine of the character described, the combination of a rotatable table, a plurality of matrix dies mounted thereon, a punch, means for rotating said table to successively position said dies beneath said punch, a member for closing the bottom of a matrix die when so positioned, means for actuating said punch to coöperate with the die, a duct in said punch, means for forcing liquid under pressure through said duct to expand a drawn blank into engagement with the walls of said matrix die, and means for automatically ejecting the expanded blank after the table has been rotated to position the next succeeding matrix die beneath said punch.

12. In a machine of the character described, the combination of a rotatable table, a plurality of matrix dies mounted thereon, a punch, means for rotating said table to successively position said dies beneath said punch, a member for closing the bottom of a matrix die when so positioned, means for actuating said punch to coöperate with the die, a duct in said punch, means for forcing liquid under pressure through said duct to expand a drawn blank into engagement with the walls of said matrix die, means for automatically ejecting the expanded blank after the table has been rotated to position the next succeeding die beneath said punch, and means for withdrawing liquid from the expanded blank before it is ejected.

IRVING L. POMEROY.

Witness:
M. A. KIDDIE.

Copies of this patent may be obtained for five cents each, by addressing the "Commissioner of Patents, Washington, D. C."