US 20050184073A1

(19) United States

(12) Patent Application Publication

(10) Pub. No.: US 2005/0184073 A1

(43) Pub. Date: Aug. 25, 2005

Peisach et al.

(54) CONTAINER FOR HOT FILL FOOD PACKAGING APPLICATIONS

(75) Inventors: **Alberto Peisach**, Golden Beach, FL (US); **Hernan Mendez**, Bogota (CO)

Correspondence Address:
HUNTON & WILLIAMS LLP
INTELLECTUAL PROPERTY DEPARTMENT
1900 K STREET, N.W.
SUITE 1200
WASHINGTON, DC 20006-1109 (US)

(73) Assignee: **Phoenix Capital, Ltd.**

(21) Appl. No.: **11/100,939**

(22) Filed: **Apr. 7, 2005**

**Related U.S. Application Data**

(62) Division of application No. 10/625,605, filed on Jul. 24, 2003.

**Publication Classification**

(51) Int. Cl.[7] ..... F24C 7/10

(52) U.S. Cl. ..... 220/508

(57) **ABSTRACT**

A plastic container suitable for hot-fill food packaging applications is disclosed which is characterized by walls of proportionately decreasing thickness from the mouth of the container to a predetermined collapsible point. The wall thickness is designed such that the container walls will collapse, or deform, only at the collapsible point during cooling after hot-filling of food product or during transportation of the container between locations of varying altitudes and pressures. The container preferably collapses in the base area such that the collapse is not visible to the consumer and also the collapse does not affect stability of the container while in use or during loading and storage. The container of the invention is advantageous in that it requires less plastic material to form than other known hot-fill containers, and also can be formed out of any suitable food-grade plastic material or by any process.

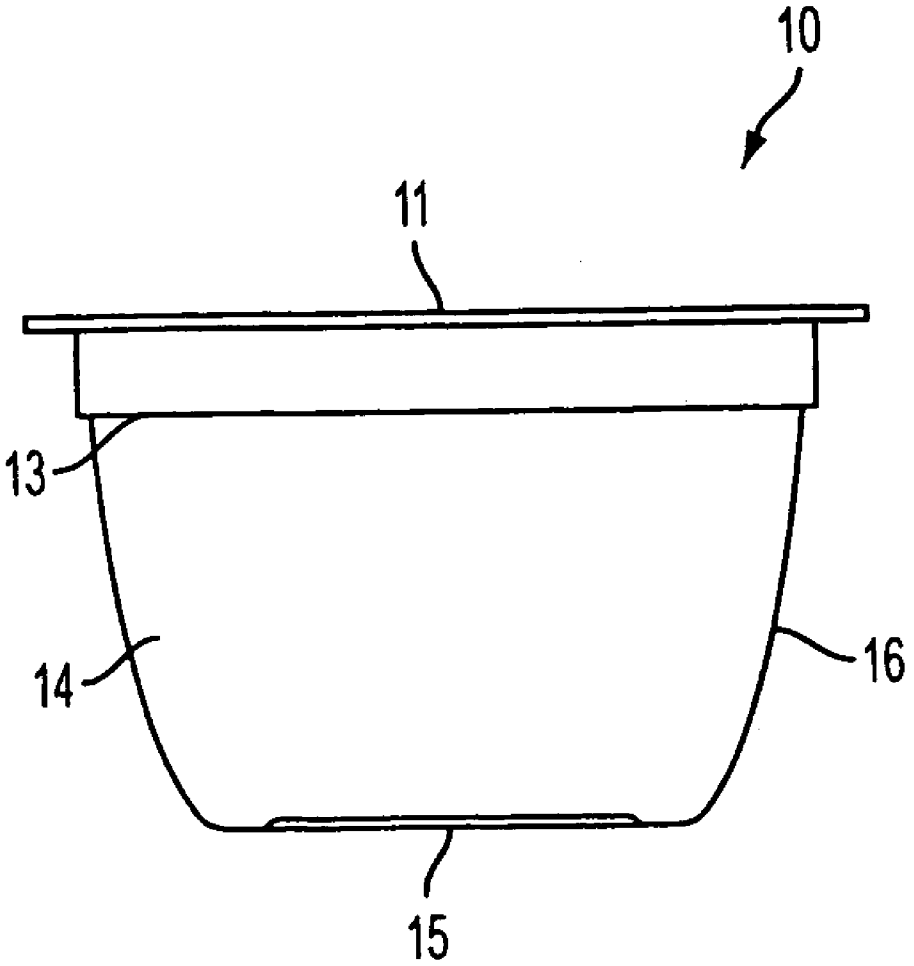

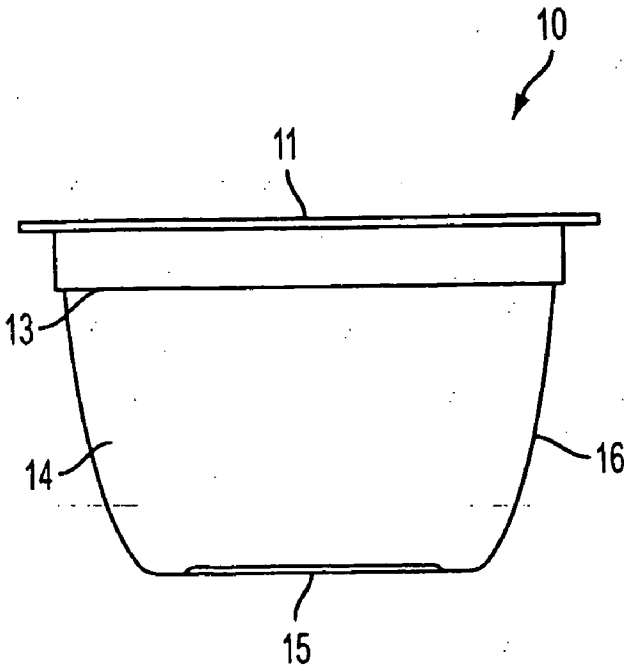


FIG. 1A

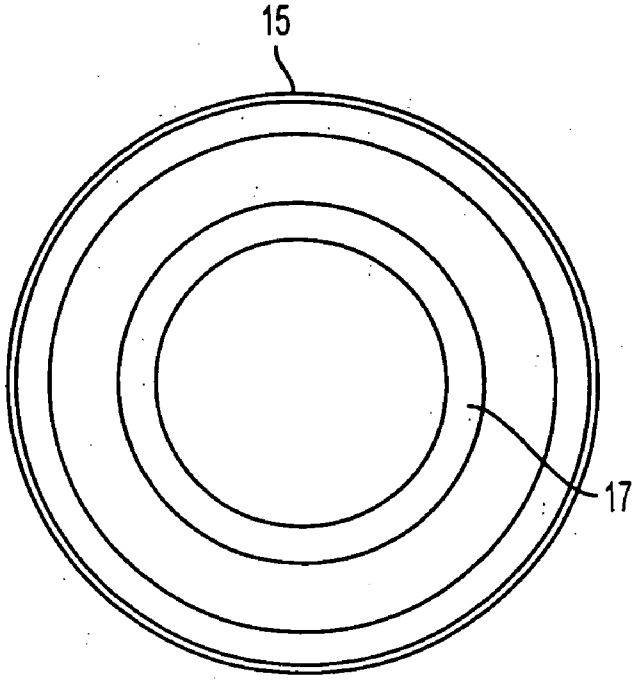


FIG. 1B

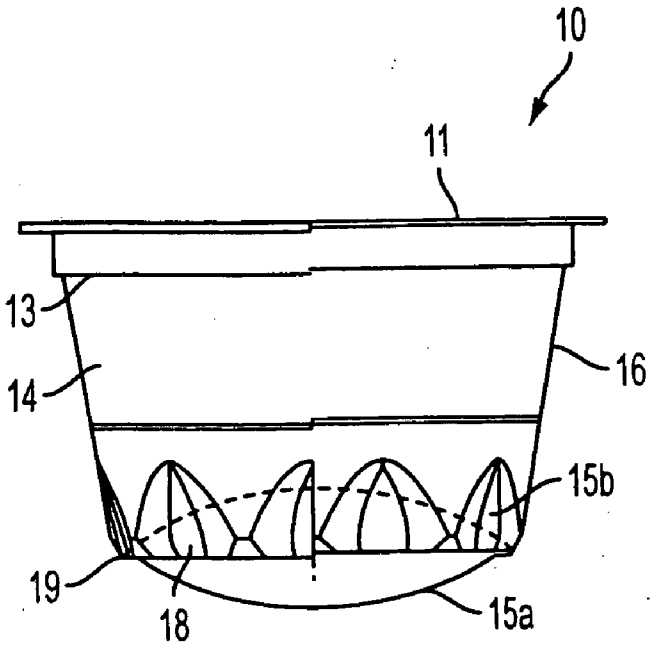


FIG. 2A

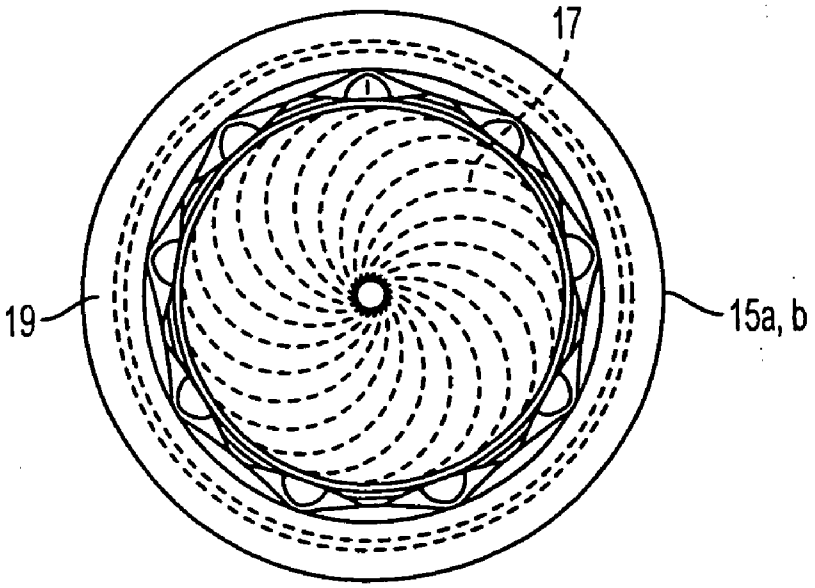


FIG. 2B

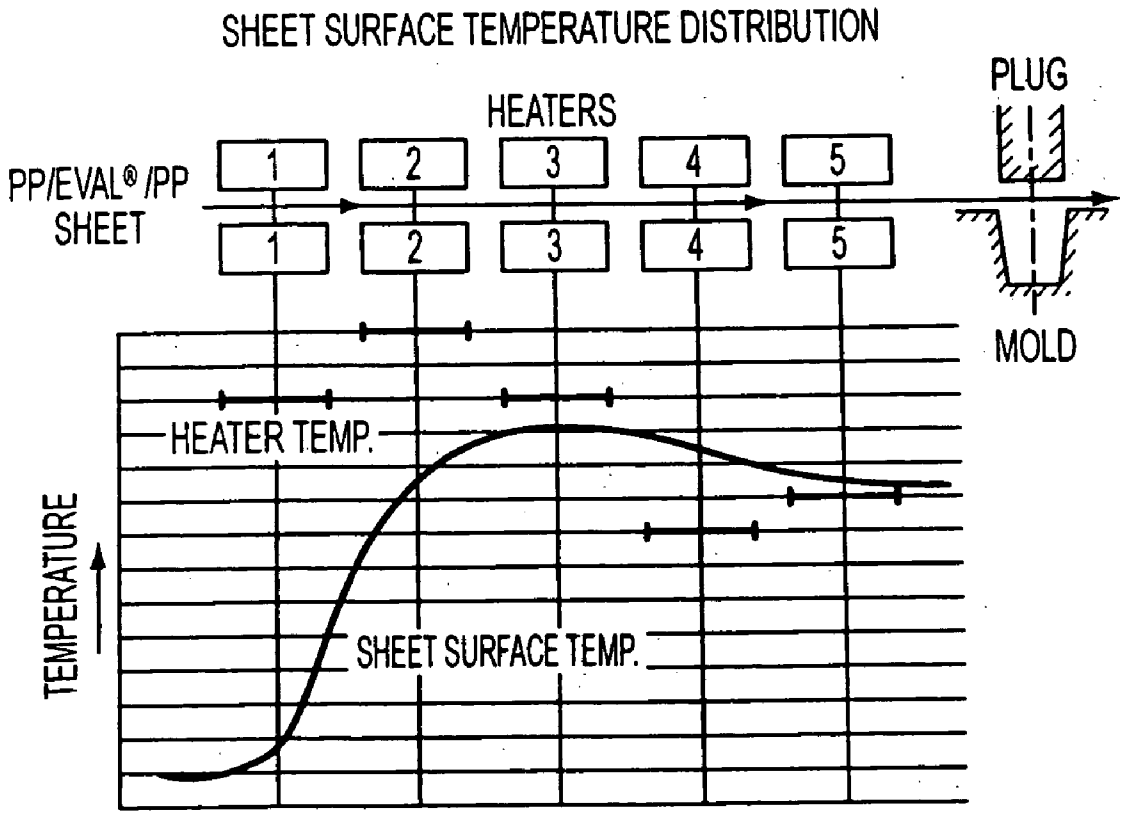
SHEET SURFACE TEMPERATURE DISTRIBUTION
PLUG
HEATERS
PP/EVAL® /PP SHEET
1
2
3
4
5
1
2
3
4
5
MOLD
HEATER TEMP.
TEMPERATURE
SHEET SURFACE TEMP.

FIG. 3

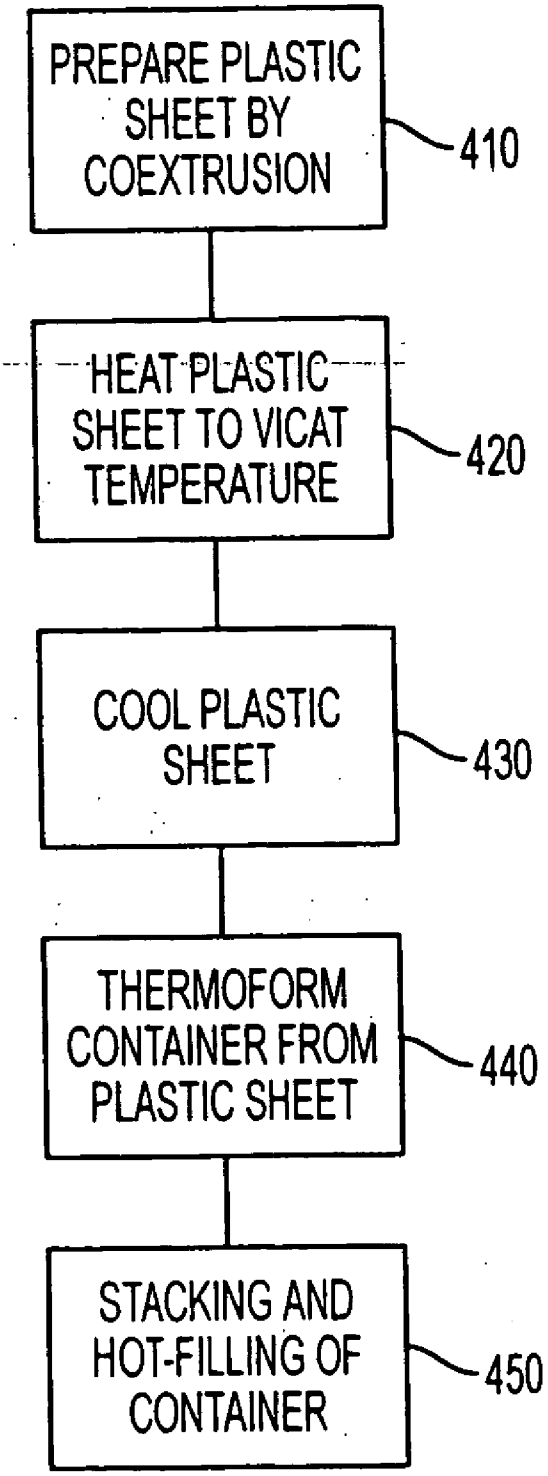
PREPARE PLASTIC SHEET BY COEXTRUSION
410
HEAT PLASTIC SHEET TO VICAT TEMPERATURE
420
COOL PLASTIC SHEET
430
THERMOFORM CONTAINER FROM PLASTIC SHEET
440
STACKING AND HOT-FILLING OF CONTAINER
450

FIG. 4

# CONTAINER FOR HOT FILL FOOD PACKAGING APPLICATIONS

## FIELD OF THE INVENTION

[0001] The invention relates to a plastic container suitable for hot-fill food packaging applications, and a method of making the container. The container is manufactured in a manner such that the walls have a sufficient strength to withstand collapse upon cooling of the container after sterilization, or during the transport of the filled container between locations of varying altitude. A collapsible point, preferably the bottom of the container, is manufactured to selectively deform to compensate for the pressure differentials experienced between the interior of the container and atmospheric pressure after hot-filling, and during transport of the container between locations of different altitudes. Also disclosed is a method of forming a container having a selectively deformable collapsible point, and walls that do not deform, after hot-filling and during other pressure changes.

## BACKGROUND OF THE INVENTION

[0002] The storage of food products in plastic containers is well known. Further, it is known that food products can be hot-packed into plastic containers and then sealed to satisfy requirements for food products as well as to provide extended shelf life.

[0003] Typically, a food product is packed in the container while the food product is at sterilization temperature and then the container is fitted with a sealed cover. An air space exists between the top level of the hot-packed food product and the seal. As the food product cools, the reduction in temperature causes a reduction in this air volume. This reduction in air volume results in a corresponding reduction in pressure within the container, and can cause the container to collapse due to the head space remaining between the food product and the seal of the container after sealing and cooling. In addition, any changes in the altitude of the location of the packed container can cause similar expansion and/or contraction of the container due to changing pressure differentials between the interior of the container and the atmospheric pressure at the different locations.

[0004] Such plastic containers must be designed to withstand contraction inside the container caused by cooling of the hot-filled food product, as well as those pressure changes that occur during transport of the plastic containers. Container deformation typically can occur at any location in the container where the container wall cannot withstand the experienced pressure differential between the inside of the container and the atmospheric pressure. Although container deformation does not necessarily affect the sterility and stability of the packed food product, consumers tend to shy away from such products based on the appearance that the containers are perhaps damaged or otherwise spoiled. In addition, container deformation causes the containers to be difficult to load and store due to the nonuniformity of the walls or bases. Also, container deformation can make a container unstable when used by the consumer, when for example the base is deformed such that the container is not steady when placed on a surface.

[0005] Many designs of plastic containers are known to fulfill these requirements. One approach has been to design a plastic container having wall design of sufficient rigidity to withstand the pressure differentials. For example, U.S. Pat. Nos. 4,318,882 and 4,497,855 issued to Agrawal et. al. both titled "Method for Producing a Collapse Resistant Polyester Container for Hot Fill Applications," the disclosures of which are hereby incorporated by reference in a manner consistent with this disclosure ("Agrawal"), disclose a polyester container having at least one region that is thermoelastically deformable inwardly after the container is hot filled and sealed to offset the pressure forces which tend to collapse the container as the contents cool and create an internal vacuum. Agrawal discloses a process of forming this region by a two step molding process in which the region is formed and heat set at a first position and then reformed outwardly to a second position and cooled in that position.

[0006] U.S. Pat. Nos. 6,062,409 and 6,347,717 issued to Eberle both titled "Hot Fill Plastic Container Having Spaced Apart Ribs," the disclosures of which are hereby incorporated by reference in a manner consistent with this disclosure ("Eberle I"), disclose a blow molded plastic container comprising a plurality of vacuum panels having substantially arched upper and lower ends and vacuum panel reinforcement means in a series of arched ribs. The design of the container minimizes the stress placed on the corners of vacuum panels and resists flexing when the container is filled with a hot liquid.

[0007] Similarly, U.S. Pat. Nos. 5,178,289 and 5,279,433 to Krishnakumar et. al. both titled "Panel Design for a Hot-Fillable Container," the disclosures of which are hereby incorporated by reference in a manner consistent with this disclosure ("Krishnakumar"), disclose a vacuum panel design for a hot-fill container which resists the increase in container diameter which may occur during hot-filling or when the container is dropped on a hard surface.

[0008] U.S. Pat. No. 5,337,909 issued to Vailliencourt and titled "Hot Fill Plastic Container Having a Radial Reinforcement Rib," the disclosure of which is hereby incorporated by reference in a manner consistent with this disclosure ("Vailliencourt"), discloses a container of a heat set material having a plurality of elongated vertically oriented vacuum panels in its sidewall and first and second circumferentially extending inwardly directed reinforcement ribs which permit the center portions of the panels to flex inward during filling and sealing the container with a hot liquid but resisting deformation of the container sidewall. U.S. Pat. No. 5,341,946 also issued to Vailliencourt et. al. and titled "Hot Fill Plastic Container Having Reinforced Pressure and Absorption Panels," the disclosure of which is hereby incorporated by reference in a manner consistent with this disclosure ("Vaillencourt et. al."), discloses a container having a plurality of vertically oriented vacuum absorption panels to prevent the sidewall from taking a permanent set deflected inwardly.

[0009] Another approach is to use a specially designed base configuration to provide stability to the container. For example, U.S. Pat. No. 5,005,716 issued to Eberle titled "Polyester Container for Hot Fill Liquids," the disclosure of which is hereby incorporated by reference in a manner consistent with this disclosure ("Eberle II"), discloses a polyester container having a base configuration including an outer circular ring defining a support plane for the container

with a central outwardly concave dome portion therein. The dome portion includes a number of reinforcing rings formed along concentric tangent lines. The configuration is designed to provide mechanical stability in response to positive and negative pressures within the container that tend to cause deformation of the container. Similarly, U.S. Pat. No. 4,993,567 issued to Eberle Jr. titled "Involute Embossment Base Structure for Hot Fill PET Container," the disclosure of which is hereby incorporated by reference in a manner consistent with this disclosure ("Eberle Jr."), discloses a base configuration for a blow molded plastic container having a peripheral support ring that is generally concentric with the container side walls and connected to a central dome structure. A number of embossments raised around the central disk to resist deformation induced by stresses incurred during hot filling of the container.

**[0010]** Another approach has been to design plastic containers with certain crystalline structures that are less susceptible to deformation during the sterilization process. For example, U.S. Pat. No. 5,106,567 issued to Demerest titled "Method for Producing a Heat Set Article of Thermoformed Polyethylene Terephthalate," the disclosure of which is hereby incorporated by reference in a manner consistent with this disclosure ("Demerest"), discloses a article made of polyethylene terephthalate ("PET") having a degree of crystallinity of at least 20% giving the article more uniform and reproducible impact resistance over amorphous PET articles.

**[0011]** U.S. Pat. No. 4,582,665 issued to Jabarin titled "Method of Making Polyethylene Terephthalate Articles," the disclosure of which is hereby incorporated by reference in a manner consistent with this disclosure ("Jabarin"), discloses a method of making an oriented and heat set thermoformed article of PET. The sidewalls of the article have a specific density, and the article is quenched after forming while under restraint in order to limit volume shrinkage and to increase the onset-of-shrinkage temperature of the article.

**[0012]** Yet another approach includes a combination of container design and controlled treatment of the container after it has been filled. See, e.g., U.S. Pat. Nos. 4,642,968 and 4,667,454 to McHenry et. al. titled "Method Of Obtaining Acceptable Configuration Of A Plastic Container After Thermal Food Sterilization Process," the disclosure of which is hereby incorporated by reference in a manner consistent with this disclosure ("McHenry"). McHenry discloses a method of obtaining an acceptable configuration of a thermally processed container packed with food. The disclosure teaches that such a configuration can be obtained by proper container design, by maintaining proper headspace of gases in the container during thermal processing, proper pressure outside the container during the cooking cycle and cooling cycle of the process and/or by controlled reforming of the bottom wall of the container. In addition, further improvements can be obtained by controlling the thermal history of the empty container.

**[0013]** U.S. Pat. No. 5,234,126 issued to Jonas et. al. titled "Plastic Container," the disclosure of which is hereby incorporated by reference in a manner consistent with this disclosure ("Jonas"), discloses a plastic container made in accordance with equations relating to reforming pressure and low fill equilibrium pressure giving the container a unique bottom configuration which, independent of wall thickness, obviates paneling and other deformations of the container during sterilization.

**[0014]** Colombian Patent No. 25357 issued to Alberto, titled "Moving Bottom Container," the disclosure of which is hereby incorporated by reference in a manner consistent with this disclosure, discloses a formed plastic container having a base design that collapses to compensate for changes in pressure due to the effect of changes in height relative to sea-level during transport, storage and sale of the packed containers.

## BRIEF SUMMARY OF THE INVENTION

**[0015]** The invention relates to a plastic container suitable for the packaging of hot-filled food products that can withstand the pressure changes caused by the cooling of the hot food product in the sealed container, and also during transport of the packed containers between locations having a pressure differential. The invention also relates to a method of manufacture of the container. The container of the invention includes walls designed by their thickness to have a collapsible point, which collapsible point is controllable by the manufacturing process. Preferably, the collapsible point is designed to be located in the base of the container such that it is not visible to the consumer after it collapses, and also is designed such that the stability of the container when standing is not affected.

**[0016]** Where the collapsible point is designed to be located in the base of the container, the thickness of the container walls are controlled such that the walls can withstand a designed pressure force without deformation, except for the collapsible point. This is done by controlling the manufacturing process to maintain the desired wall and bottom surface thicknesses of the container. In the preferred embodiment, the wall thickness decreases proportionately from the area of the container substantially adjacent to the mouth, to the bottom of the container, and the thickness of the bottom is less than the thickness of the walls. This is accomplished in the preferred forming process of thermoforming by controlling the dimensions of the mold and the counter-mold, and controlling the expulsion (ejection) pressure and the temperature of the plastic sheet during forming. In addition, the desired collapsible point may be further induced by a surface design that will facilitate the collapse of that point at a lesser pressure differential that can be withstood by other components of the container. The collapse of the collapsible point reduces the head space between the food product and the seal in the interior of the container, and then reduces or eliminates the probability that the walls of the container will also collapse, or otherwise deform.

**[0017]** The container of the invention can be made of any plastic materials that are suitable for food packaging, and any forming method. For example, common plastic materials include polyethylene terephthalate (PET), polyester, ethylene, polystyrene, low density and high density polyethylene and polypropylene, or combinations of these materials. Additives may be included with the plastic materials to enhance properties desired in the final container. For example, additional barrier materials, such as polyvinyldichloride ("PVDC"), polyvinylchloride ("PVC"), or ethylene vinyl acetate-vinyl alcohol resins ("EVOH") may be added

to decrease permeability of the container to such undesirable materials as oxygen and water vapor. Materials may be added to adapt the optical properties. For example, materials may be added to decrease light penetration into the container, or to increase clarity of the container.

[0018] The container may be made by numerous known methods of forming, such as blow molding, thermoforming, extrusion, injection molding, blister packaging, vacuum forming or any other method of forming.

[0019] One object of the invention is to provide a plastic container suitable for hot-fill food packaging that can withstand pressure differentials incurred after hot-filling and transport to locales of varying altitudes without undesirable, or uncontrolled, deformation of the container walls.

[0020] It is another object of the invention to provide a plastic container suitable for hot-fill food packaging that has a controlled collapsible point such that any deformation of the container walls, and particularly the bottom surface, does not affect the stability of the container when it is placed on a surface for use.

[0021] It is another object of the invention to provide a plastic container suitable for hot-fill food packaging that has a controlled collapsible point such that any deformation of the container walls does not affect the packing and handling characteristics of the container for transport and storage.

[0022] It is another object of the invention to provide a plastic container suitable for hot-fill food packaging that has a controlled collapsible point that can be prepared by the various forming processes.

[0023] Yet another object of the invention is to provide a plastic container suitable for hot-fill food packaging having proportionately decreasing wall thickness from the mouth of the container to a predetermined collapsible point in the bottom surface of the container such that the container does not collapse during or after hot-filling or during transportation except at the collapsible point.

[0024] It is another object of the invention to provide a plastic container suitable for hot-fill food packaging that has a controlled collapsible point such that the total amount of plastic used to manufacture the cup is reduced over containers of comparable size and application as manufactured by other currently known processes.

[0025] It is another object of the invention to provide a method for manufacturing a plastic container suitable for hot-fill food packaging that has walls of proportionally decreasing thickness and a controlled collapsible point such that any deformation of the container walls do not affect the appeal of the container to the consumer.

[0026] These and other objects will become apparent to those of ordinary skill in the art through the description provided below.

## BRIEF DESCRIPTION OF THE DRAWINGS

[0027] **FIG. 1***a* is a schematic of a filled container manufactured according to previous technology.

[0028] **FIG. 1***b* is a schematic of the bottom surface design of a filled container manufactured according to previous technology.

[0029] **FIG. 2***a* is a schematic of a container manufactured according to one embodiment of the invention.

[0030] **FIG. 2***b* is a schematic of the bottom surface design of a filled container manufactured according to one embodiment of the invention.

[0031] **FIG. 3** is a graphical representation of a typical heat treatment of a plastic sheet for solid phase plastic forming.

[0032] **FIG. 4** is a flow scheme of the process of the invention for manufacturing a container according to one embodiment of the invention.

## DETAILED DESCRIPTION OF THE INVENTION

[0033] The system and method of the invention relates to a container suitable for hot-fill applications having walls that can withstand the pressure differentials experienced during and after sterilization, and also during transport of the packed containers between locations having a pressure differential. A selected collapsible point is designed into the container, typically the bottom, that compensates for the pressure differentials experienced during the sterilization process and transport between locales of different pressures. The collapsible point may be designed such that the point of collapse, or deformity of the container surface, may easily be hidden from exterior view by placement of a sleeve over the container, or by other means. Alternatively, the deformed surface may be designed such that it collapses into the container itself, where it is hidden from view. In this embodiment, the container walls adjacent to the bottom surface should be designed such that they do not collapse as well when the bottom surface collapses. The bottom surface can be designed to have a surface design that enhances its collapsing property, and reduce and/or eliminate any collapsing of the adjacent walls.

[0034] In the preferred embodiment of the invention, the walls of the container as made by the thermoforming process can withstand pressure differentials between the interior of the sealed container and the atmospheric pressure of 12 psi, while the bottom of the container collapses between about 2.5 psi to about 10 psi pressure differential between the interior of the sealed container and the atmospheric pressure. In the preferred embodiment of the invention, the collapsed bottom surface will typically not be able to "pop out" again after collapsing into the container.

[0035] The collapsible point is preferably selected by designing the thickness of the surface where the collapsible point is located to withstand the least pressure differential between the interior of the container and the atmospheric pressure, as compared to the other surfaces of the container, such as the walls of the container. Once the collapse of the collapsible point occurs, the head space inside the container between the food product and the seal is reduced, making it unlikely that the walls of the container will collapse or otherwise deform. In addition, the other walls should be designed to withstand pressure differentials between the inside of the sealed container, both before and after the collapsible point has collapsed, and the atmospheric pressure that may be expected to occur after hot-filling and/or transport. One method of designing the walls to have sufficient strength is by the thickness of the walls. The thickness

of the container walls may be uniform, or preferably they may gradually decrease from a point substantially adjacent to the mouth of the container to a point substantially adjacent to the point where the container walls meet the bottom surface. The decrease of the container wall thickness may be uniform, although that is not a requirement. Additionally, or alternatively, the container walls may include a design that increases strength against collapse or deformation, as known to those skilled in the art of container design. In the preferred embodiment of the invention, such a structural wall design is included at the area of the container wall substantially adjacent to the bottom surface. This assists in preventing any buckling of the walls in that area when the bottom collapses. In addition, the container wall may include a decorative design that may or may not add structural integrity to that surface.

**[0036]** If the container is manufactured by another method other than thermoforming, such as injection molding, the container wall and bottom surface thickness may be controlled by a mold design that allows the walls to be of a thickness to withstand pressure differentials between the inside of the sealed container, both before and after the collapsible point has collapsed, and the atmospheric pressure that may be expected to occur after hot-filling and/or transport, and the bottom surface of the container to be the selectively collapsible point by making the bottom surface of lesser thickness than the walls. Alternatively, a surface other than the bottom surface can be designed by the mold to be the selectively collapsible point.

**[0037]** Preferably, the method of forming the container is by thermoforming, and specifically solid phase pressure forming ("SPPF"), although other suitable methods such as melt phase forming ("MPF"), blow molding, injection molding, blister packaging, vacuum forming and extrusion may be used.

**[0038]** The plastics that may be used in forming include FDA approved food grade acrylic, low density polyethylene ("LDPE"), high density polyethylene ("HDPE"), polystyrene ("PS"), polypropylene ("PP"), crystalline polyester ("CPET"), polyethylene ("PE") and combinations of these or other materials that are currently used to achieve barrier properties listed as "other" recycle code 7. Other suitable plastics may be selected that are in compliance with 21 C.F.R. § 177.1360 of the FDA regulations, and also 21 C.F.R. § 175.105, or regulations relating to food grade plastics of the locale that the container is to be used. Alternatively, if the container is not to be used for food applications, the choice of starting raw materials is not so limited.

**[0039]** Additives may be included with the plastic. For example, materials to enhance barrier properties may be added, such as ethylene vinyl acetate-vinyl alcohol copolymer ("EVOH"), PVDC, PVC, nitrile barrier resin or Nylon™. Barrier materials may be desirable in applications where the designer needs to reduce the permeation of oxygen and water vapor into the container. For example, typically oxygen and water vapor transmission rates of less than about 5 cc/mil/100 $in^2$/24 hours/atmosphere at 23° C./73° F. and 75% RH is desirable for food packaging applications. Also, typically an adhesive material is included in the plastic material. One skilled in the art of forming containers for food packaging will be able to select a suitable adhesive, and level of adhesive, to be used in the plastic for the forming of a container according to the invention. Suitable adhesives include Antistatic 745-2AS™ and AS 745-5AS™ available from Comai; Antioxidant CESA-STAT PPARFB 12020™ available from Clari ant; AS ASPA-2485™ available from Shullman; and Antistatic 40390™ available from Ampacet. Additives may also include materials for aesthetic or other functional purposes, such as clarity and blockage of light to the packed food product.

**[0040]** In thermoforming, sheet plastic is molded into the desired shape via the pressing of formers, or molds, into a sheet of heated plastic. Familiar products manufactured by thermoforming include yogurt pots and simple trays. According to the preferred embodiment of the invention, the plastic used to form the container comprises a sheet of mixed EVOH, PP polymer and adhesive. A suitable EVOH is EVAL™ J102B resin available from Eval Company of America, located in Houston, Tex. EVAL™ J102B comprises approximately 32 mol % ethylene, with a Melt Index ("MI") of approximately 2.0 g/10 min @ 190° C. and 2160 g, and 4.9 g/10 min @ 210° C., 2160 g, according to ASTM D1238. The density is approximately 1.17 g/cc according to ASTM D1505. The melting point and crystallization temperature, as measured by differential scanning calorimetry, is approximately 183° C. and 161° C., respectively. The glass transition point, as measured by dynamic viscoelasticity, is approximately 69° C. The oxygen permeability, as measured by ASTM D1434, is approximately 0.03-14 cc/mil/100 $in^2$/24 hrs/atm @ 65% relative humidity and 68° F., and $1.8\times10^{-14}$ cc/cm/$cm^2$/sec/Hg @ 65% relative humidity and 20° C. The water vapor transmission rate, according to ASTM E96-E, is approximately 3.8 g/mil/100 $in^2$/24 hrs @ 90% RH and 100° F., and approximately 50 g/30 $\mu m^{2124}$ hrs @ 90% RH and 40° C. The gloss at 45° is 85 as measured by ASTM D2457. The haze is approximately 1.9% as measured by ASTM D1003. The ultimate tensile strength is approximately 8200 psi and the ultimate elongation is approximately 270%, as measured by ASTM D882.

**[0041]** A suitable PP is PROPILCO™ 03H96, available from Polipropileno del Caribe S.A. of Bogota, Colombia. The melt flow of PROPILCO™ 03H96 is approximately 3 g/10 min, as measured by ASTM D123 at 230° C. and 2.16 kg. The tensile yield strength is approximately 5300 ps, or 36.5 Mp and the tensile yield elongation is approximately 9.3, as measured at 50 mm/nin by ASTM D638. The Rockwell hardness is approximately 102 as measured by D 785.

**[0042]** Preferably, the composition of the plastic sheet in the preferred embodiment is approximately 0% to approximately 15% by volume EVOH, and approximately 80% to approximately 100% by volume PP, more preferably approximately 1% to approximately 7% by volume EVOH, and approximately 85% to approximately 95% by volume PP, and even more preferably approximately 1% to approximately 5% by volume EVOH, and approximately 90% to approximately 95% by volume PP. Additionally, adhesive may be included in amounts as determined by those skilled in the art to form the container.

**[0043]** The plastic sheet is typically formed by extrusion, or coextrusion where combinations of materials may be used to form the plastic sheet. Typically, the various materials are extruded to form a multilayer plastic sheet. For example, in

the preferred embodiment of the invention, the plastic sheet comprises five layers of PP, adhesive, EVOH, adhesive and PP. However, other additives may be added together during extrusion for use in a single layer. Those skilled in the art of thermoforming will be able to select suitable conditions for forming the plastic sheet according to the desired properties of the finished container.

[**0044**] After the sheet of plastic that will be used to form the container is formed, the sheet is preferably preheated to a substantially uniform temperature distribution using methods and equipment known to those skilled in the art of thermoforming. In the preferred embodiment of the invention, an Illig 50K™ deep draw cup forming thermoforming machine is used having a forming area of about 500×280 mm. The Illig 50K™ is available from ADOLF ILLIG Maschinenbau GmbH & Co. KG located in Heilbronn, Germany. The Illig 50K™ has five (5) heaters, each heater having three zones. In the preferred embodiment, the sheet is heated by a succession of a plurality of heaters comprising upper and lower heaters. The heaters form a "tunnel" or "oven" through which the plastic sheet passes on a belt conveyor. The heaters heat the plastic sheet to its VICAT temperature according to methods and processes known to those skilled in the art. Any heating equipment or method can be used so long as it achieves a substantially uniform temperature distribution throughout the sheet. Of course, for different forming methods, other temperatures may be necessary. For example, for injection molding, the plastic material must be completely melted to pour into the mold.

[**0045**] Typically during thermoforming the plastic sheet undergoes one or more heating and cooling cycles. The actual thermoforming step comprises fitting a plug into a mold to form the desired dimensions and shape of the container. After the container is formed, it cools almost immediately and the formed containers are typically stacked directly out of the thermoformer.

[**0046**] Once the container is formed, it may be used for hot-fill food applications. The thickness of the walls of the container are sufficient to withstand the pressure differences experienced during the cooling of the hot-filled food product, and yet the thickness of the bottom of the container allows the container to selectively collapse at that point, where the deformation remains unnoticed by the consumer or ultimate purchaser of the container. Similarly, the deformation point may be designed to be located at a different location in the container, and the artisan skilled in the art of the selected forming process may adjust the forming conditions appropriately to form the desired collapsible point. The advantage of designing the collapsible point at the bottom of the container is that the container may then be placed in a decorative outer sleeve that shields the collapsed bottom from view. Alternatively, and preferably, the bottom of the container is designed with a surface design that allows mainly the center area of the bottom to collapse, such that the edges of the bottom surface that do not collapse provide stability for the container.

[**0047**] Turning now to the figures, **FIG. 1***a* is a schematic of a filled container manufactured according to previous technology. **FIG. 1***a* depicts a container **10** having a **11**, a mouth **12**, an inner chamber **14**, a bottom **15** and a side wall **16**. The inner chamber **14** is filled with a food material to level **13** that is hot-filled into the container. The side walls **16** are designed to withstand the pressure differentials between the interior of the sealed container and atmospheric pressure. The bottom **15** is substantially level following hot-filling and cooldown of the hot-filled food product.

[**0048**] **FIG. 1***b* depicts the bottom surface of the container of **FIG. 1***a* having a bottom surface design **17**. Typically, such a bottom surface design **17** is designed to withstand the pressure differentials between the interior of the sealed container after hot-filling and atmospheric pressure.

[**0049**] A container manufactured according to the invention is depicted in **FIG. 2***a*. The container **10** includes a mouth **11**, an inner chamber **14**, a bottom **15***a, b* and walls **16**. A food product is hot-filled in the inner chamber **14** to a level **13**. The lower area of the walls **16** substantially adjacent to the bottom **15***a*, **15***b* may optionally, and preferably, include a design **18** that may provide structural enhancements to that area of the wall **16** given its close location to the collapsible bottom **15***a*, **15***b*. This design **18** may also provide aesthetic enhancements, or may provide both aesthetic and structural enhancements to the container **10**.

[**0050**] In the container manufactured according to the invention, the bottom **15***a* is not necessarily level after manufacture, although the bottom **15***a* may be level. After hot-filling and cooling of the food product, the bottom **15***b* of the container selectively deforms by collapsing inward toward the inner chamber **14**. When this occurs, any head space that had been present between the level of the packed food **13** and the top of the container is reduced and/or substantially eliminated. Notably, the walls **16** remain substantially uniformly tapered from the mouth **11** to the bottom **15***b*, and no deformation occurs. This is due to the increased wall thickness of the walls **16** over the bottom **15***a, b*. The wall thickness of the walls **16** and bottom **15***a, b* have been designed and manufactured to allow only for deformation of the bottom **15***a, b* after cooling of the hot-filled food product. This structural integrity may be enhanced by design **18**.

[**0051**] The bottom **15***a, b* preferably is designed to have a surface design **17**, shown in **FIG. 2***b*, that further enhances the propensity of the bottom **15***a, b* to collapse selectively over the walls **16**. In addition, the surface design **17** is situated such that only the portion of the bottom **15***a, b* having the surface design **17** actually collapses, permitting the uncollapsed outer edges of the bottom **19** to shield the collapsed bottom surface **15***b* from view, so that the container does not appear to include "deformities" from the perspective of a consumer. In addition, the uncollapsed outer edges of the bottom **19** also provide stability to the container when standing upright.

[**0052**] The desired wall thickness can be determined by methods known to those skilled in the art of manufacturing containers for hot-fill food packing applications by calculating the pressure within the interior of the container after hot-filling and subsequent cooling of the food product. The container of the invention may also be designed to selectively deform at the bottom **15** and not the walls **16** for containers that are hot-filled at locales of higher elevation, and then transported to locales of lower elevation. The container of the invention may also be designed to withstand pressure changes incurred during other applications, such as transport of the containers in non-pressurized airplane cargo holds.

[0053] **FIG. 3** provides a graphical representation of a common heat treatment for plastic sheets in preparation for thermoforming. This graphical representation is exemplary only, and is not intended to limit the invention in any manner. **FIG. 3** demonstrates that those skilled in the art of thermoforming typically follow a pattern of rapidly increasing the temperature of the plastic sheet to be used for forming to a temperature higher than the VICAT temperature, but lower than the melting temperature. Then, the temperature is allowed to slowly and slightly cool to the desired VICAT temperature at which time the product is formed by punching the plug into the mold in the thermoformer. This method of raising the temperature of the plastic sheet to the VICAT temperature may be used in the invention, although any other method that produces a desirable thermoformed product may also be used.

[0054] A schematic of the thermoforming process of the preferred embodiment invention is depicted in **FIG. 4**. At Step **410**, the plastic sheet that will be used in the thermoforming process is prepared. Typically, the sheet is prepared by extrusion, or coextrusion, according to principles and methods known to those skilled in the art of plastics. The composition of the plastic sheet is selected by the designer of the final product to include the clarity and barrier properties desired. In Step **420**, an optional pretreatment of the plastic sheet may take place, if necessary, prior to thermoforming. Again, the necessity and conditions of the pretreatment step are selected by the designer of the final product who is acquainted with the thermoforming of the selected plastic sheet composition. In Step **430**, the plastic sheet is subjected to a heat treatment to achieve the VICAT temperature of the plastic materials in the plastic sheet. In Step **440**, the container is punched from the plastic sheet by the molds of the thermoforming machine. In Step **450**, the formed container is cooled and stacked where it may be used for hot-filling of food products.

[0055] Although the container may be any dimension desired by the designer, one common food packaging application is a four (4) ounce cup. A typical four ounce cup made according to the preferred embodiment of the invention weighs approximately 4.8 grams. The wall dimensions range from about 0.71 mm adjacent to the mouth of the cup, then proportionately decreasing to about 0.22 to about 0.34 mm or an average of 0.28 mm at the wall of the cup substantially adjacent to the bottom of the cup. The bottom of the cup is on the average about 0.16 mm thick. A typical cup is approximately 79 mm wide, and approximately 52 mm in height.

[0056] One advantage of the container of the invention is that a container of a certain size may be manufactured using less forming material than previously known containers of comparable size, resulting in cost savings in raw materials. For example, the four ounce cup previously described weighs about 4.8 g. In contrast, four ounce containers manufactured using currently known techniques range from about 6.5 to about 6.7 grams. The raw material savings in the container of the invention, for a comparable sized container, can result in a savings of over 35% up to about 50% in raw material costs. Further cost savings may be realized if raw material costs increase.

[0057] This savings is realized because the containers previously produced include walls throughout the cup of sufficient thickness to prevent collapse at any point. By designing and manufacturing a container with a selectively collapsible bottom by the system and method of the invention, the manufacturer can realize significant raw material cost savings while not experiencing increased manufacturing costs, when using the same forming process.

## EXAMPLES

[0058] The following example is provided as a further description of one embodiment of the invention, and is not intended to be limiting.

[0059] A four ounce cup was made according to the invention that corresponds to the cup depicted in **FIG. 1** by the thermoforming process. The place of manufacture was Medellin, Colombia, having an altitude above sea level of about 6500 feet. Note that the forming conditions should be adjusted according to the ambient conditions of the location of the manufacturing facility.

[0060] A starting plastic multilayer sheet comprising about 70-80 volume % EVAL™ J102B resin, about 2040 volume % PROPILCO™ 03H96 PP and about 15-20 volume % Comai 745-2AS™ adhesive, based on a total thickness of the multilayer sheet of about 1.02 mm, was formed by coextrusion. The approximately 49 mm wide sheet was continuously fed at a rate sufficient to mold four ounce cups, ten cups at a time, 14 cycles per minute. The plastic sheet was fed into an Illig 50K™ thermoforming machine where the first zone heaters were set at about 350° C./425° C./300° C.; the second zone heaters were set at about 335° C./310° C./370° C.; and the first heater of the third zone was set at about 335° C. The cups were then formed from the multilayer plastic sheet using a mold refrigerated to about 13° C., and a countermold, also known as plug-assist, refrigerated to about 11° C. The cups were ejected by air pressurized to about 5 psi from a distance of about 95 mm from the cutting tool.

[0061] Each container was approximately four ounces, and about 79 mm in width and about 52 mm in height, with a weight of about 4.8 grams. The wall dimensions range from about 0.71 mm adjacent to the mouth of the cup, then proportionately decreasing to about 0.22 to about 0.34 mm or an average of 0.28 mm at the wall of the cup substantially adjacent to the bottom of the cup. The bottom of the cup is on the average about 0.16 mm thick. A typical cup is approximately 79 mm wide, and approximately 52 mm in height. The wall thickness was determined to provide sufficient rigidity to withstand pressure differences between the interior of the container and the atmospheric pressure of up to 12 psi. The bottom of the container began to collapse at a pressure differential of about 2.5 psi, and complete collapse was observed at about 10 psi pressure differential. These pressure differentials have been tested to meet or exceed the pressure differentials experienced by cups used for hot-fill food product packaging under actual conditions.

[0062] The foregoing embodiments have been presented for the purpose of illustration and description only and are not to be construed as limiting the scope of the invention in any way. The scope of the invention is to be determined from the claims appended hereto.

**1**. A plastic container, comprising:

a mouth;

a bottom surface; and

a container wall between the mouth and the bottom surface,

wherein one of the bottom surface or the container wall flexes inward into the cavity of the plastic container;

wherein further the inward flexing of the bottom surface of the container wall reduces a pressure differential between the inside of the container and atmospheric pressure when either the container is hot-filled with food product or when the container is transported from a locale of lower atmospheric pressure to higher atmospheric pressure; and

wherein further the non-flexing surface maintains the same form from prior to hot-filling or transport.

**2**. The plastic container of claim 1, wherein the thickness of the container walls decreases from a point substantially at the mouth to a point substantially at the bottom surface.

**3**. The plastic container of claim 1, wherein the bottom surface flexes inward into the container cavity.

**4**. The plastic container of claim 3, wherein the circumference of the mouth is greater than the circumference of the bottom surface.

**5**. The plastic container of claim 4, wherein the plastic comprises a plastic suitable for solid phase pressure forming.

**6**. The plastic container of claim 5, wherein the plastic further comprises polypropylene.

**7**. The plastic container of claim 6, wherein the plastic further comprises a barrier enhancement agent.

**8**. The plastic container of claim 7, wherein the barrier enhancement agent comprises ethylene vinyl acetate-vinyl alcohol.

**9**. The plastic container of claim 8, wherein the plastic further comprises an adhesive suitable for solid phase pressure forming.

**10**. The plastic container of claim 9, wherein the adhesive comprises an antioxidant.

**11**. The plastic container of claim 5, wherein the plastic container is formed from a plastic sheet comprising up to about 15 volume % ethylene vinyl acetate-vinyl alcohol, about 80 to about 90 volume % polypropylene and about 15 to about 20 volume % adhesive.

**12**. The plastic container of claim 1, wherein the plastic container is formed from a plastic sheet having one or more layers, and wherein further the thickness of the container walls are about 70-80 volume % of the thickness of the plastic sheet at a location substantially adjacent to the container mouth and about 20-40 volume % of the sheet at a location substantially adjacent to the bottom surface, and the thickness of the bottom surface is about 15-20 volume % of the thickness of the plastic sheet.

**13**. The plastic container of claim 12, wherein the container wall thickness uniformly decreases from a location substantially adjacent to the container mouth to a point substantially adjacent to the bottom surface.

**14**. The plastic container of claim 13, wherein the container walls are about 0.7 mm thick at a location substantially adjacent to the container mouth and about 0.28 mm thick at a point substantially adjacent to the bottom surface, and the thickness of the bottom surface is about 0.16 mm.

**15-31**. (canceled)

* * * * *