July 21, 1925. 1,546,999

W. ROSE

WRAPPING MACHINE

Filed Jan. 3, 1924

Fig. 1.

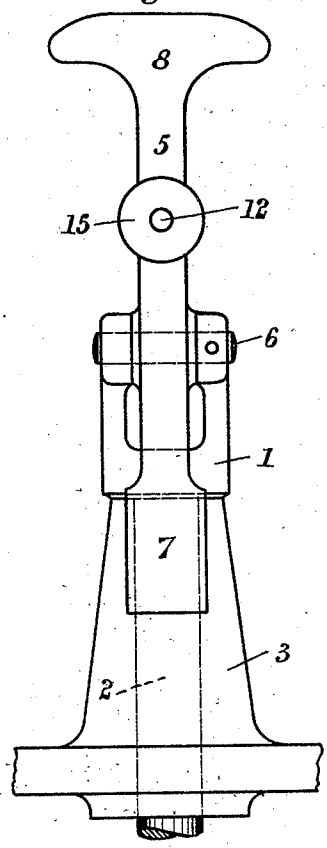

Fig. 2.

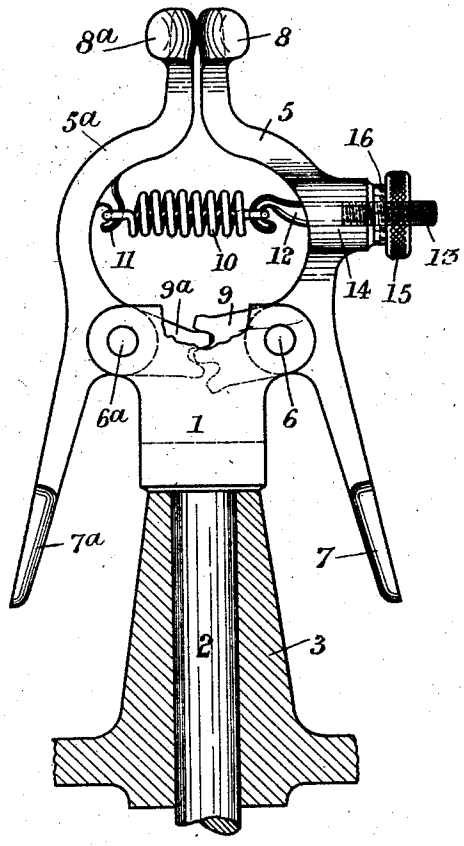

Fig. 4.

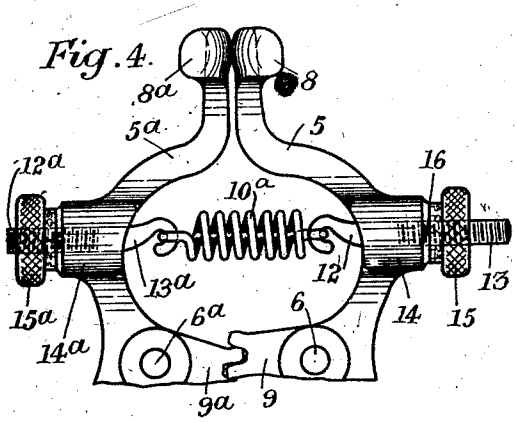

Fig. 3.

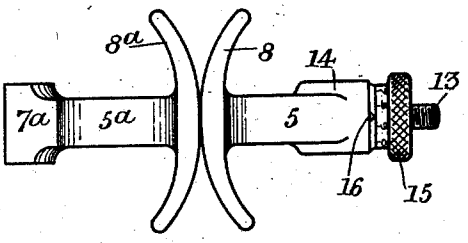

INVENTOR:-
WILLIAM ROSE
by his Attorneys
Howson and Howson

Patented July 21, 1925. 1,546,999

UNITED STATES PATENT OFFICE.

WILLIAM ROSE, OF GAINSBOROUGH, ENGLAND.

WRAPPING MACHINE.

Application filed January 3, 1924. Serial No. 684,167.

To all whom it may concern:

Be it known that I, WILLIAM ROSE, a subject of the King of Great Britain, residing at Albion Works, Gainsborough, in the county of Lincoln, England, have invented new and useful Improvements in Wrapping Machines, of which the following is a specification.

This invention relates to that class of machines or apparatus in which blocks, caramels, or the like, are wrapped, and in which grippers grip and twist the ends of the wrappers thereof, means being provided whereby the gripping faces of the said grippers may be caused to exert a yieldable amount of pressure on the ends of the wrappers.

This invention comprises essentially an intermittently or continuously rotatable wrapper-gripping and twisting member having pivotally supported grippers, and a spring or springs attached to the said grippers in such manner that the amount of pressure which the said spring or springs exerts or exert on the said grippers during such time or times as the said grippers grip and twist the end of the wrapper may be readily and exactly adjusted in accordance with the more or less fragile character of the material of which the wrapper which is to be twisted is made.

I will now proceed to describe an arrangement of means in accordance with my invention, with reference to the accompanying drawings in which:—

Figure 1, is a side elevation (shewn partly in section) of an arrangement of gripping means constructed and operable in accordance with my invention.

Figures 2 and 3, are respectively a plan, and end view, of Figure 1, and

Figure 4, is a side elevational view of a modified form of construction of the gripping means shewn in Figure 1.

A gripper-carrying-member 1, is arranged on the end of a spindle 2, capable of suitable revolving movements in a bearing 3, carried on a bracket, or on the framework of a machine of which the several hereinafter described elements form constituent members.

Gripping elements 5, and 5^a, are pivotally supported by pins 6, and 6^a, on the gripper-carrying-member 1, and are respectively provided with actuating arms 7, and 7^a, and at their respective forward ends, with suitably shaped gripping jaws 8, and 8^a.

A toothed sector 9, is provided on the gripping element 5, and a similar toothed sector 9^a, is provided on the gripping element 5^a.

The said toothed sectors 9, and 9^a, are arranged to engage with each other in such manner that when either one of the aforementioned actuating-arms 7, or 7^a, is operated to move towards the axis of rotation of the gripper-carrying-member 1, then the other of the said actuating-arms will also, by means of the co-engagement of the two toothed sectors 9, and 9^a, be caused to approach towards the axis of rotation of the gripper-carrying-member 1, and as a consequence the forwardly positioned gripping-jaws 8, and 8^a, will be caused to move away from each other, against the action of the spring 10, or of the alternative arrangement of spring 10^a.

One end of the spring 10, (see Figure 2) is hooked on to a lug 11, on the gripping element 5^a, whilst the other end of the said spring 10, is attached to an extension piece 12, having a screw thread 13, formed thereon.

The said extension piece 12, passes through a boss 14, in the gripping element 5.

A nut 15, on the threaded end of the extension piece 12, may be adjusted on the said threaded portion of the extension piece 12, in such manner as to regulate and impart to the gripping-jaws 8, and 8^a, pressure which is suitable to the more or less fragile nature of the paper or like material, operated upon the gripping-jaws 8 and 8^a.

In a modified arrangement shewn in Figure 4, the lug 11, is not employed, but a boss 14^a, is provided on the gripper element 5^a.

An extension piece 12^a, to which is attached one end of a spring 10^a, passes through the boss 14^a.

A similar extension piece 12, passes through a boss 14, provided on the gripping element 5.

Nuts 15 and 15^a, engage the threaded portions 13, and 13^a, of the respective extension pieces 12, and 12^a.

A zero mark 16, may be provided on the boss 14, (see Figure 3) and in like manner on the bosses 14, and 14^a, and graduated

numbers as shewn on Figure 3 may be provided on the nut 15, and in like manner on the nuts 15, and 15ª.

The said zero mark 16, and corresponding graduated numbers are employed to facilitate the adjustment and regulation (by an operator) of the tension of the hereinbefore mentioned spring 10, or of the spring 10ª, and as a consequence, the exact desired pressure of the gripping jaws 8 and 8ª, on the paper or like material operated on by the said gripping jaws, 8, and 8ª, may be readily and easily obtained.

It should be understood that I do not limit myself to the precise arrangement and method of operation of the several elements herein described and illustrated in the accompanying drawings, as modifications may be made relatively thereto without departing from the nature of this invention.

What I claim is:—

1. In a machine for wrapping articles by twisting the ends of the wrapper thereof, a rotatable wrapper-twisting member, and a pair of wrapper-engaging grippers supported thereon, an extension piece adapted to pass through a slot in one of said grippers and having a screw thread formed thereon, in combination with a nut moveable on said screw threads and a spring fastened to said extension piece and adapted to exert yieldable closing pressure on said grippers; substantially as and for the purposes described.

2. In a machine for wrapping articles by twisting the ends of the wrappers thereof, a rotatable wrapper-twisting member, and a pair of wrapper-engaging grippers each having a slot therein, in combination with two extension pieces each adapted to pass through the slot in one of said grippers and having a screw thread thereon, a spring attached at each end to one of said extension pieces, and a nut engaging each of said screw threads; substantially as and for the purposes described.

3. Apparatus in accordance with claim 2, in which the nut on the extension piece has graduation marks thereon, and there is a zero mark on the co-acting gripper; substantially as and for the purposes described.

In testimony whereof I have signed my name to this specification in the presence of two subscribing witnesses.

WILLIAM ROSE.

Witnesses:
H. ANDREWS,
F. E. WILTSHER.