2 Sheets--Sheet 1.

E. P. HALSTED.

Improvement in Tenoning Machines.

No. 115,603. Patented June 6, 1871.

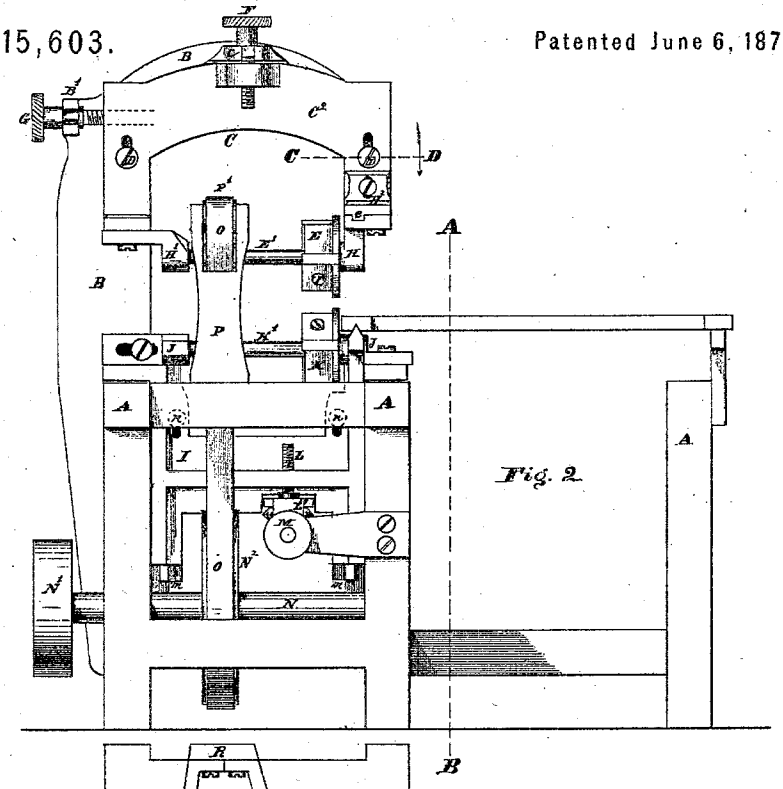

Fig. 2

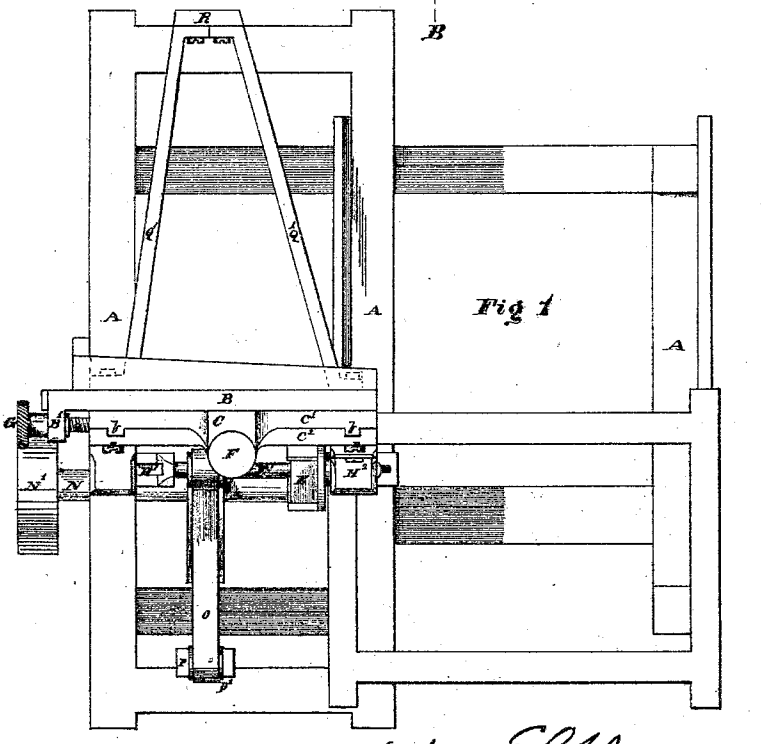

Fig 1

Witnesses: Thos. H. Dodge, Chas. H. Burleigh

Inventor. E. P. Halsted

AM. PHOTO-LITHOGRAPHIC CO. N.Y. (OSBORNE'S PROCESS.)

2 Sheets--Sheet 2.

E. P. HALSTED.

Improvement in Tenoning Machines.

No. 115,603. Patented June 6, 1871.

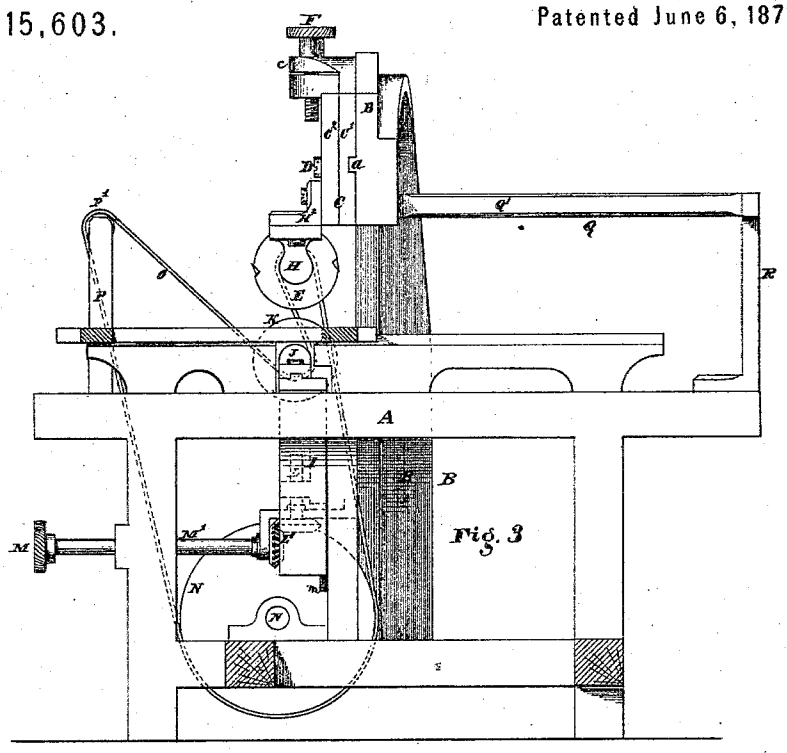

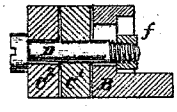

Fig. 4

Witnesses
Thos. H. Dodge
Chas. Burleigh

Inventor
E. P. Halsted

AM. PHOTO-LITHOGRAPHIC CO. N.Y. (OSBORNE'S PROCESS.)

UNITED STATES PATENT OFFICE.

EMINEL P. HALSTED, OF WORCESTER, MASSACHUSETTS, ASSIGNOR TO R. BALL & CO., OF SAME PLACE.

IMPROVEMENT IN TENONING-MACHINES.

Specification forming part of Letters Patent No. 115,603, dated June 6, 1871.

To all whom it may concern:

Be it known that I, EMINEL P. HALSTED, of the city and county of Worcester and Commonwealth of Massachusetts, have invented certain new and useful Improvements in Tenoning-Machines; and I do hereby declare the following to be a full, clear, and exact description of the same, reference being had to the accompanying drawing which forms a part of this specification, in which—

Figure 1 represents a plan view of my improved tenoning-machine. Fig. 2 represents a front elevation of the same. Fig. 3 represents a vertical section at line A B, Fig. 2; and Fig. 4 represents a horizontal section of one side of the top frame at line C D, Fig. 2, showing one of the holding-bolts.

To enable those skilled in the art to which my invention belongs to make and use the same, I will proceed to describe it more in detail.

The nature of my invention consists in certain improvements in tenoning-machines, as hereafter fully described.

In the drawing, the parts marked A represent the main frame, which is constructed of the form shown. At one side is arranged an auxiliary frame, B, which is to be made of metal, and is formed with an overhanging top, in the manner illustrated in Fig. 2. A double adjustable shaft supporting or bearing frame, C, is secured to the overhanging top portion of the auxiliary frame B by means of holding-bolts D. One section, C^1, of said frame C is arranged to slide laterally upon a transverse horizontal way, *a*, formed across the face of C, while the other portion, C^2, of the frame C, is arranged to slide up and down upon a pair of vertical ways, *b*, formed on the section C^1, thus permitting adjustment of the upper cutter-head E, which is connected with the section C^2 both horizontally and vertically. An adjusting-screw, G, set in a projecting portion, B′, of the auxiliary frame B, is arranged for moving the double frame C laterally, and a similar screw, F, set in a projecting portion, *c*, of the section C^1, is arranged for moving the section C^2 vertically, so that the adjustment in each direction can readily be made to any desired degree of nicety, and the parts can be firmly held in position, when properly adjusted, by turning up the holding-bolts D. The bolts D pass through vertical slots in the section C^2, through close-fitting holes in the section C^1, and through horizontal slots in the frame B, at the back of which they screw into nuts *f*, said nuts being let into horizontal slots in the metal of the frame B sufficiently to prevent them from turning around. The bearings H and H^1 of the upper cutter-head shaft E′ are fastened to the lower part of the section C^2, as indicated, the left-hand bearing H^1 being arranged so that it can be adjusted in a direction parallel with the axis of the shaft E′, while the right-hand bearing H is arranged so that it can be adjusted both vertically and horizontally in a direction perpendicular to the axis of the shaft, the left-hand end of which is supported by a socket-joint in H^1, an intermediate adjusting-block, H^2, being placed between the bearing H and supporting-frame C, as fully shown in the drawing. The bearing H is grooved upon the upper side, and the block H^2 is provided with a tongue, *e*, which fits into said groove, and supports the bearing H against the thrust of the cutter-head shaft E′. By means of the vertical adjustment of bearing H I am enabled to set the cutter-head E so as to cut the tenons either dovetailing, straight, or tapering, as desired. In the lower part of the machine there is arranged a vertical slide-frame, I, upon which are supported the bearings J J′ of the lower cutter-head shaft K′. The frame I is retained in position by suitable ways *m*, on which it can be moved up and down by an adjusting-screw, L, for the purpose of raising or lowering the cutter-head K to adjust it to the proper position. The screw L can be operated by means of a hand-wheel, M, at the front of the machine, from which a shaft, M′, extends back, and is connected with the screw L by a pair of bevel-gears, L′, as indicated in Fig. 3. The bearings J J′, in which the spindle or shaft K′ turns, are secured to the top of the frame I in such a manner that they can be adjusted, in a direction parallel to the axis of said shaft, and clamp-screws *n* are arranged through slots in the frame I, whereby said frame can be firmly secured in any adjusted position. (See dotted lines, Fig. 2.) A driving-shaft, N, is arranged across the lower part of the main frame A, and

it is provided at its outer end with a suitable pulley, N^1, to receive the belt from the main shaft, by which motion is transmitted to the machine, and also with a pulley, N^2, upon which runs a belt, O, that drives the cutter-heads E and K. The belt O is arranged as indicated in Fig. 3, and passes over a small pulley, P′, at the upper end of a vertical standard, P, under the pulley on the lower cutter-head shaft K′, and over the pulley of the cutter-head shaft E′; thence down and around the pulley N^2. The vertical standard P may be made adjustable up and down so as to raise and lower the pulley P′, and thereby compensate for the change in the belt with the different adjustments of the cutter-heads. A brace-frame, Q, is arranged in connection with the auxiliary frame B and main frame A, consisting of two horizontal bars, Q′ Q′, which extend from the upper part of the auxiliary frame B to an upright standard, R, at the rear part of the main frame A.

Having described my improved tenoning-machine, what I claim therein as new and of my invention, and desire to secure by Letters Patent, is—

1. The combination, with the auxiliary frame B, of the double adjustable shaft supporting or bearing frame C, adjusting-screws F and G, and adjustable bearings H H^1 H^2, substantially as and for the purposes set forth.

2. In the combination with the elements of the first claim, the vertically-adjustable frame I, adjustable shaft-bearings J J′, and frame-adjusting devices, consisting of the screw L, gears L′, shaft M′, and hand-wheel M, substantially as and for the purposes set forth.

Witnesses: EMINEL P. HALSTED.

THOS. H. DODGE,

CHAS. H. BURLEIGH.