Jan. 22, 1952 C. F. HAUTAU 2,583,175

SPRINKLER

Filed Oct. 19, 1946 4 Sheets-Sheet 1

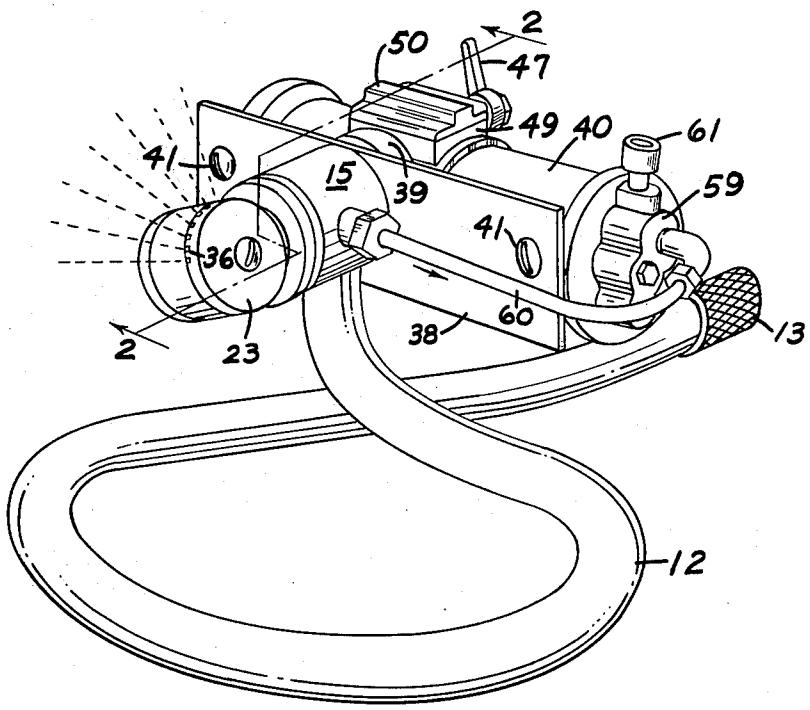

Fig. 1

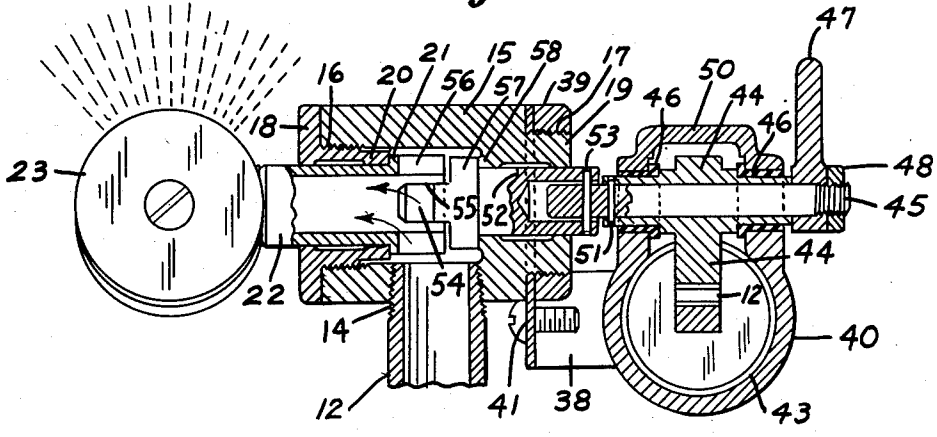

Fig. 2

INVENTOR.
CHARLES F. HAUTAU
BY Edward M. Apple
ATTORNEY

Jan. 22, 1952 C. F. HAUTAU 2,583,175

SPRINKLER

Filed Oct. 19, 1946 4 Sheets-Sheet 2

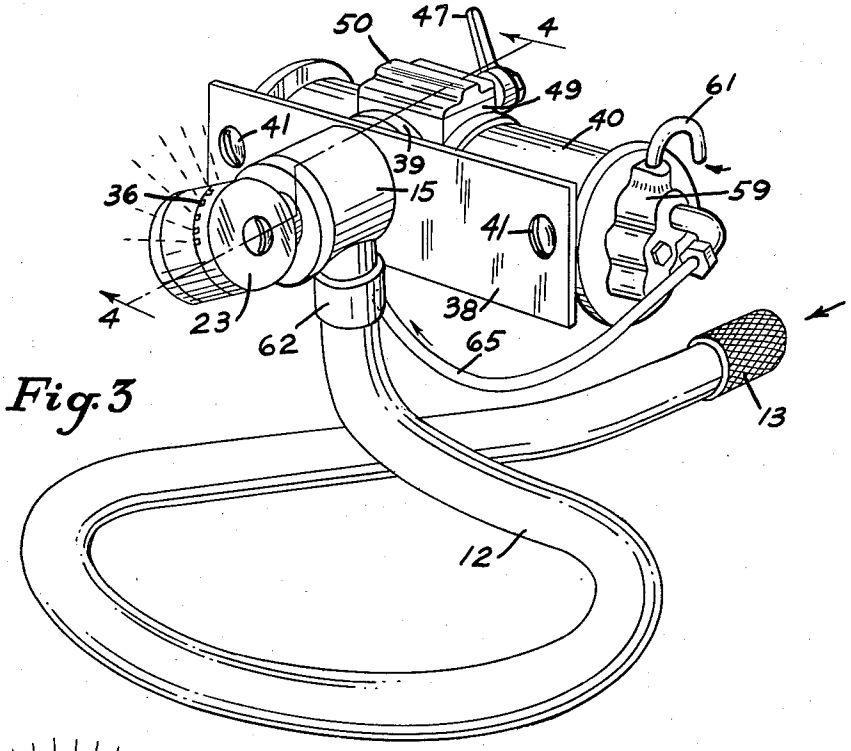

Fig. 3

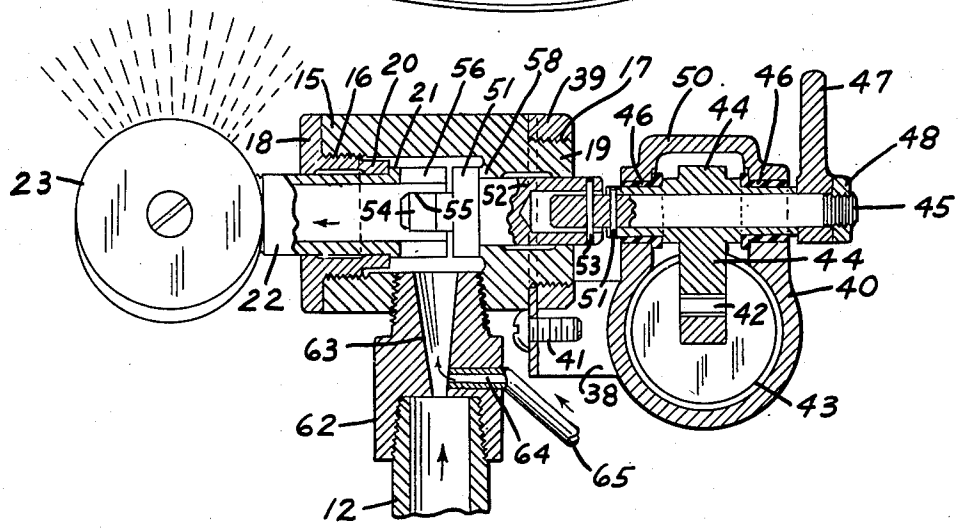

Fig. 4

INVENTOR.
CHARLES F. HAUTAU

BY Edward M. Apple

ATTORNEY

Jan. 22, 1952 C. F. HAUTAU 2,583,175

SPRINKLER

Filed Oct. 19, 1946 4 Sheets-Sheet 3

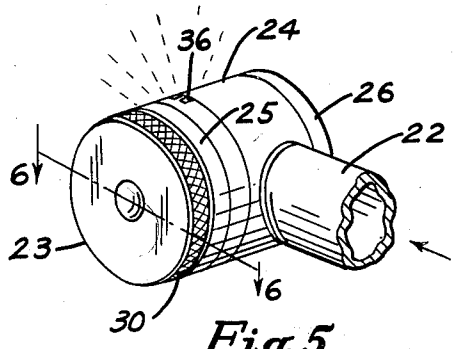

Fig. 5

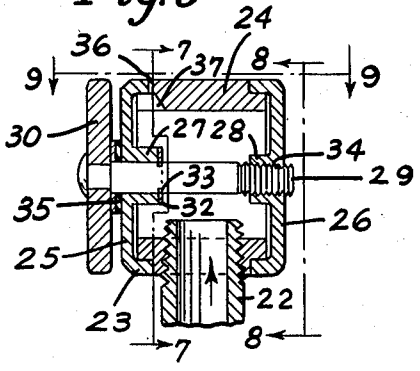

Fig. 6

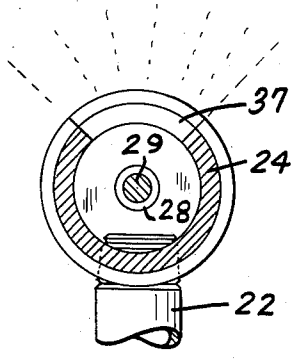

Fig. 7

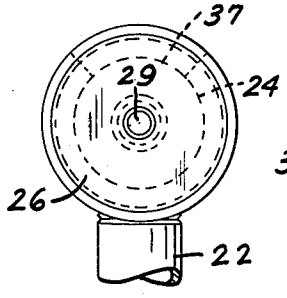

Fig. 8

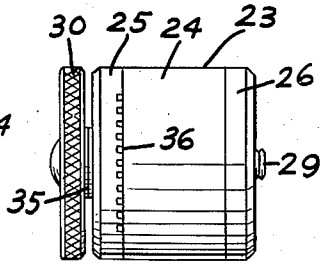

Fig. 9

INVENTOR.
CHARLES F. HAUTAU

BY Edward M. Apple

ATTORNEY

Jan. 22, 1952 C. F. HAUTAU 2,583,175

SPRINKLER

Filed Oct. 19, 1946 4 Sheets-Sheet 4

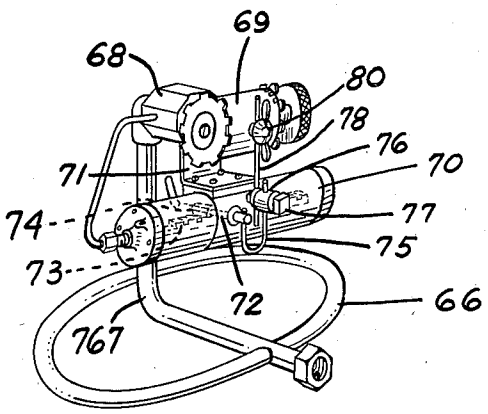

Fig. 10

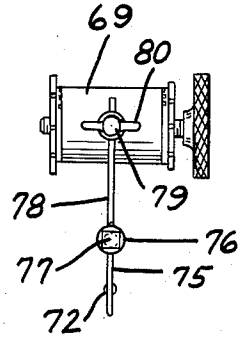

Fig. 11

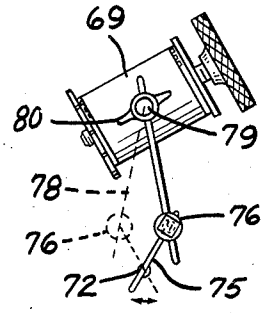

Fig. 12

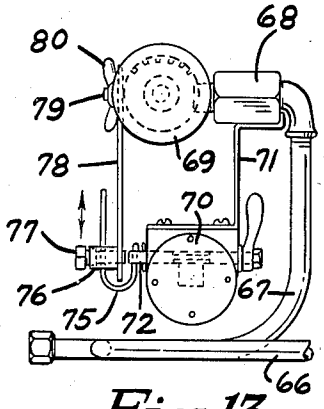

Fig. 13

INVENTOR.
CHARLES F. HAUTAU
BY Edward M. Apple
ATTORNEY

Patented Jan. 22, 1952 2,583,175

UNITED STATES PATENT OFFICE

2,583,175

SPRINKLER

Charles F. Hautau, Huntington Woods, Mich., assignor to Hautau Stamping Company, Detroit, Mich., a corporation of Michigan

Application October 19, 1946, Serial No. 704,438

7 Claims. (Cl. 299—47)

1

This invention relates to lawn sprinklers, and particularly to sprinklers of the reciprocatory type.

An object of the invention is to generally improve devices of the character indicated, and to provide a water actuated sprinkler which is simple in construction, economical to manufacture, and efficient in operation.

Another object of the invention is the provision of a sprinkler mechanism which is readily adaptable for use with a conventional windshield wiper motor.

Another object of the invention is the provision of a device of the character indicated which is constructed and arranged in such manner as to effect a self cleaning operation in the sprinkler head.

Another object of the invention is the provision of a device of the character indicated which is constructed and arranged in such manner that many different variations of width, angle, coarseness and direction of spray may be effected.

Another object of the invention is the provision of a device of the character indicated which may readily be adjusted to spray any size square or rectangular area.

Another object of the invention is the provision of a device of the character indicated which is readily adjustable so that the degree of reciprocation of the sprayer head may be changed to suit various operation conditions.

Another object of the invention is the provision of reciprocable sprayer head which is constructed and arranged in such manner that the angle of reciprocation may be readily adjusted.

Another object of the invention is the provision of a device of the character indicated which is constructed and arranged in such manner that the internal water pressure is utilized to effect a seal between the working parts.

The foregoing and other objects and advantages of the invention will become more apparent as the description proceeds, reference being made from time to time to the accompanying drawings, forming part of the width disclosure, in which drawings:

Fig. 1 is a perspective view of a device embodying my invention.

Fig. 2 is a section taken substantially on the line 2—2 of Fig. 1.

Fig. 3 is a perspective view of a modified form of the device embodying my invention, but employing a suction action instead of a direct water drive to motivate the reciprocating head.

Fig. 4 is a section taken substantially on the line 4—4 of Fig. 3.

2

Fig. 5 is an enlarged fragmentary detail of the sprinkler head comprising part of the structure illustrated in Fig. 1.

Fig. 6 is a section taken on the line 6—6 of Fig. 5.

Fig. 7 is a section taken on the line 7—7 of Fig. 6.

Fig. 8 is an end view taken substantially on the line 8—8 of Fig. 6.

Fig. 9 is a top plan view taken substantially on the line 9—9 of Fig. 6.

Fig. 10 is a perspective view of another modified form of device embodying the invention with a different mechanism for reciprocating the head.

Fig. 11 is a side elevational view of the head and part of the reciprocating mechanism.

Fig. 12 is a view similar to Fig. 11, but showing the head in angular position.

Fig. 13 is an end view of the device shown in Fig. 10 with the reciprocating mechanism on dead center.

Referring now more particularly to the drawings, it will be understood that in the embodiment disclosed in Figs. 1 and 2, the reference character 12 indicates a base formed of a continuous length of pipe bent and rebent as shown and provided at one end with a knurled and threaded fitting 13, adapted to accommodate the threaded terminal of a conventional garden hose. The base 12 is threaded as its other end, as at 14 (Fig. 2) and is adapted to support a tubular distributor member 15, the latter being threaded at each end, as at 16 and 17, to accommodate the end members 18 and 19. The end member 18 has an inwardly extending shoulder 20, which is adapted to engage and hold in position the flange 21 of the sprinkler head support 22, which is adapted to rotate on its longitudinal axis as hereinafter described.

Threadedly mounted on the end of the support 22 is a sprinkler head 23, which is constructed and arranged as illustrated in Figs. 5 to 9 inclusive. The head 23 (Fig. 6) consists of a cylindrical member 24 having end closure members 25 and 26, each of which has a centrally disposed hub portion 27 and 28 bored to accommodate the adjusting screw 29, at one end of which is the knurled knob 30.

The end member 25 (Fig. 6) travels axially with the screw 29 by reason of the retainer 32 which engages the screw 29, as at 33. The hub 28 of the end member 26 is threaded, as at 34, to engage the threads of the screw 29. Washers 35 seal the opening in the hub 27 to prevent the leakage of water around the screw 29.

The member 25 is provided with a plurality of

slots 36 through which the water is discharged along the periphery of the head, and the member 24 is undercut, as at 37, to provide a passageway to the slots 36. The axial adjustment of the end member 25 with respect to the member 24 determines the coarseness of the spray.

The distributor 15 (Figs. 1 and 2) is secured to an angle plate 38 by extending the end 19 through an opening in the plate 38 and threading thereon the nut 39. The plate 38 also serves as a mounting for the fluid motor 40 which is secured thereto by screws 41. The motor 40 may be of any reciprocating piston type, but in the embodiment herein disclosed I illustrate the use of a conventional "Trico" windshield wiper motor, having a rack 42 secured to the piston 43, and a pinion 44, fixed for rotation with the spindle 45, which is provided with seals 46, and a handle 47, which is secured in position by the nut 48. The pinion box 49 has a cover plate 50. The spindle 45 is pinned to the pinion 44, as at 51, and to a coupling 52, as at 53, which coupling 52, is in turn secured to the member 22, by the tongue 54 and the slot 55, formed in the member 22. Other slots 56 are formed in the end of the member 22 to permit the entry of water from the water inlet pipe 12.

I provide an automatic seal between the parts 20 and 21, and between the parts 52 and 15, by means of the water pressure on the interior of the device. The internal water pressure forces the collar 57 of the coupling 52 tightly against the shoulder 58 formed on the member 15, and it also forces the flange 21 of the member 22 tightly against the shoulder 20 of the end member 18, thus effecting an automatic seal in opposite directions.

The motor 40 has the conventional reversing valve mechanism 59, which is connected to the distributor 15 by means of the small water pipe 60 (Fig. 1) so that water pressure from the distributor 15 is alternately admitted to the pistons, at either end of the rack 42. The valve mechanism 59 is provided with an air intake 61.

In operation, it is obvious that the sprinkler head 23 will rock from side to side, as the member 22, the coupling 52 and the spindle 45 are actuated by the rack 42 and pinion 44.

In Figs. 3 and 4 I illustrate a mechanism similar to that shown in Figs. 1 and 2, except that the pistons carrying the rack 42 are actuated by suction rather than by direct water pressure from the distributor head 15.

The suction is created by inserting a fitting 62 in the water inlet line 12 next to the distributor 15. The fitting 62 has a tapered passageway 63 to which connects a transverse bore 64, which in turn communicates with a suction line 65, which connects with the reversing valve mechanism 59 previously described. The air is drawn into the lines 61 and 65 and moves in the direction shown by the arrows and merges with the water in the passageway 63.

In Figs. 10 to 13 inclusive I illustrate a different arrangement. In this embodiment the reference character 66 indicates a base to which is secured the water inlet 67, to the upper end of which is secured the distributor 68, to which is rockingly mounted the sprinker head 69, which is similar to the head 23 already described. In this instance the motor 70 is secured to the distributor 68 by a bracket 71.

The spindle 72, which is rotated by the rack 73 and pinion 74, as previously described, has connected to it a "U" shaped rocker arm 75, 75 which engages a collar 76, through which extends a set screw 77. A second arm 78 extends through the rear end of the set screw 77, and through a stud 79 formed on the head 69, and is held in position by the wing nut 80. By adjusting the position of the collar 76 on the arms 75 and 78 different degrees of throw may be effected, and when the collar 76 is in the position shown in Fig. 13, the mechanism is on dead center and the head 69 will remain motionless. Thus it will be seen that I have disclosed another novel means for actuating the sprinkler head.

Having described my invention, what I claim and desire to secure by Letters Patent is:

1. In a device of the character described, a spray distributing mechanism comprising a tubular member threaded at each end, apertured end members having threads in engagement with the threads of said tubular member, a tubular sprinkler head support rotatable in the aperture of one of said end members, said support having an end flange adapted to engage an inwardly extending shoulder formed on said last-named end member, a rotatable coupling extending through the aperture of said other end member, said coupling having a shoulder thereon arranged to engage a shoulder formed on said cylindrical member.

2. The structure defined in claim 1, including a sprinkler head mounted at the end of and in communication with the interior of said sprinkler head support.

3. The structure defined in claim 1, including a sprinkler head mounted at the end of and in communication with the interior of said sprinkler head support, there being a water inlet in the wall of said first-named cylindrical member and in communication with the tubular sprinkler head support.

4. The structure defined in claim 1, in which said tubular support has a slot in one end arranged to engage a tongue formed on said coupling, whereby said tubular sprinkler head support and said coupling may be rotated simultaneously about their longitudinal axes.

5. In a device of the character described, a spray distributing mechanism comprising a tubular member threaded at each end and having an inlet port in the wall thereof intermediate the ends, an apertured end member for closing each end of said cylindrical member, a tubular sprinkler head support rotatable in the aperture of one of said end members and having an end flange adapted to engage a shoulder formed on said end member to effect a seal therebetween, a coupling member rotatably mounted in the aperture of said other end member and extending therethrough, said coupling member having a tongue adapted to engage a slot formed in said tubular sprinkler head support, there being a shoulder formed on said coupling member arranged to engage a shoulder formed on said cylindrical member to effect seal therebetween.

6. The structure defined in claim 5, there being a sprinkler head threadedly mounted on said sprinkler head support, the interior of which is in communication with the interior of said sprinkler head support, said sprinkler head consisting of a cylindrical member having a threaded opening in its side wall in engagement with the tubular sprinkler head support, end closure members for said last-named cylindrical member, each of which has a centrally disposed hub portion bored to accommodate an adjusting screw which extends therethrough and at one end of which is a knurled knob.

7. The structure defined in claim 5, there being a sprinkler head threadedly mounted on said sprinkler head support, the interior of which is in communication with the interior of said sprinkler head support, said sprinkler head consisting of a cylindrical member having a threaded opening in its side wall in engagement with the tubular sprinkler head support, end closure members for said last-named cylindrical member, each of which has a centrally disposed hub portion bored to accommodate an adjusting screw which extends therethrough and at one end of which is a knurled knob, there being inturned flanges on each of said last-named end closure members adapted to engage shoulders formed on said last-named cylindrical member and an undercut on one of said shoulders in communication with a plurality of slots formed in the flange of one of said end members.

CHARLES F. HAUTAU.

REFERENCES CITED

The following references are of record in the file of this patent:

UNITED STATES PATENTS

Number	Name	Date
562,863	Storm	June 30, 1896
581,252	Quayle	Apr. 20, 1897
1,308,371	Roach	July 1, 1919
1,651,511	Cheney	Dec. 6, 1927
1,719,790	Van Aken	July 2, 1929
2,210,180	Richardson	Aug. 6, 1940
2,295,880	Valois et al.	Sept. 15, 1942
2,355,570	Spears	Aug. 8, 1944

FOREIGN PATENTS

Number	Country	Date
580,786	France	Sept. 10, 1924