Dec. 31, 1968 B. W. MATTHEWS 3,419,839

CARTRIDGE FUSE HOLDERS

Filed April 3, 1967 Sheet 1 of 3

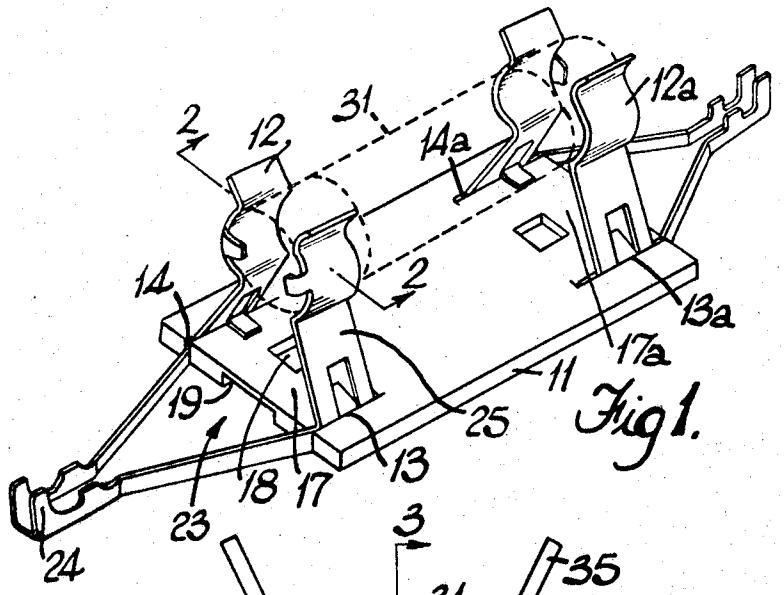

Fig 1.

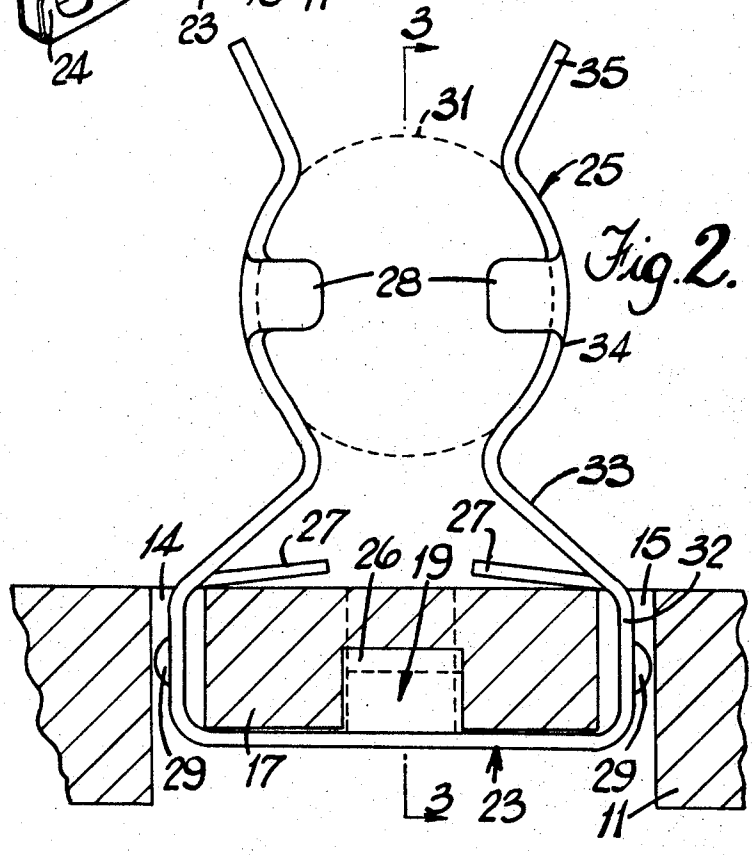

Fig. 2.

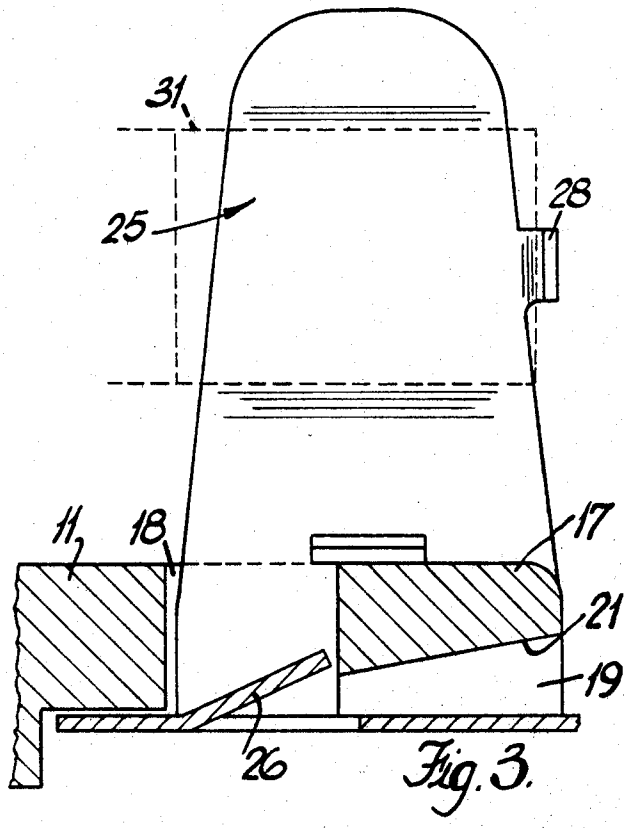

Fig. 3.

Dec. 31, 1968 B. W. MATTHEWS 3,419,839

CARTRIDGE FUSE HOLDERS

Filed April 3, 1967 Sheet 3 of 3

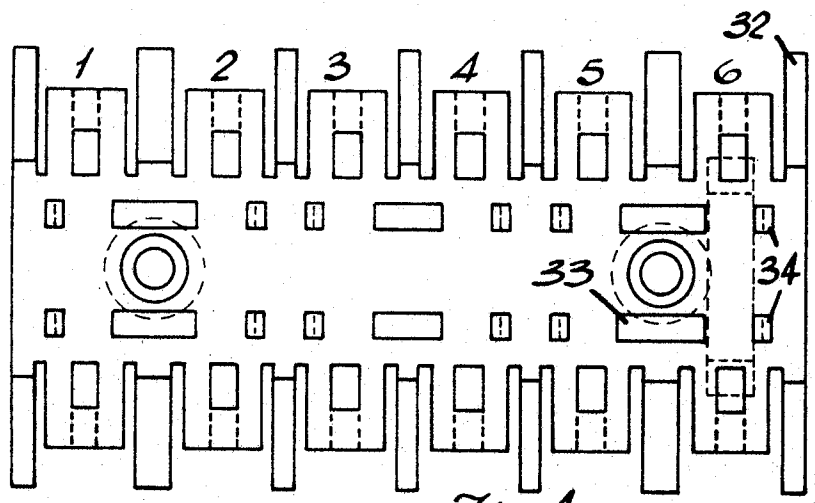

Fig. 4.

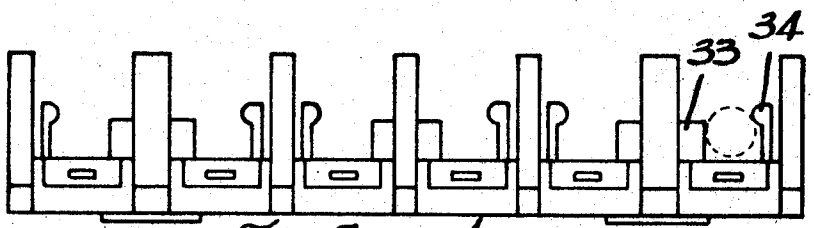

Fig. 5.

United States Patent Office 3,419,839 Patented Dec. 31, 1968

3,419,839

CARTRIDGE FUSE HOLDERS

Benjamin William Matthews, Small Heath, Birmingham, England, assignor to Joseph Lucas (Industries) Limited, Birmingham, England, a British company

Filed Apr. 3, 1967, Ser. No. 627,905
Claims priority, application Great Britain, Apr. 14, 1966, 16,347/66
5 Claims. (Cl. 337—188)

ABSTRACT OF THE DISCLOSURE

A cartridge-fuse holder comprising an insulating base having pairs of slots extending inwardly from opposite edges thereof and clips slidably engaged in each pair of slots respectively, the clips being adapted to support and make electrical connection to cartridge fuses in use.

This invention relates to holders for cartridge fuses, and has for its object to provide such a fuse holder in a convenient form.

A fuse holder according to the invention comprises in combination, an insulating base, a pair of parallel slots extending inwardly from one edge of the base, a conductive clip slidably engaged in said pair of slots and retained relative to the base, and a second conductive clip similarly engaged with an opposite edge of the base, the clips being adapted to support and make electrical connection to a cartridge fuse engaged therebetween.

One example of the invention is illustrated in the accompanying drawings wherein:

FIGURE 1 is a perspective view of a fuse holder for one fuse, the fuse being shown in dotted lines for clarity,

FIGURE 2 is a sectional view on the line **2—2** in FIGURE 1,

FIGURE 3 is a sectional view on the line **3—3** in FIGURE 2,

FIGURE 4 is a plan view of an insulating base of a holder for a plurality of fuses, and

FIGURE 5 is a side elevational view of the base shown in FIGURE 4.

Referring first to FIGURES 1, 2 and 3, the fuse holder comprises an insulating base **11** moulded in synthetic resin, and having engaged therewith a pair of conductive clips **12**, **12***a*.

The base **11** is rectangular and is formed with a pair of parallel slots **13**, **14** extending longitudinally of the base from one edge thereof, and a second pair of slots **13***a*, **14***a* aligned with slots **13**, **14** respectively and extending longitudinally of the base from the opposite edge thereof. The slots **13**, **14** define between them a finger **17** which is formed with a square hole **18** spaced from the free end of the finger. In the lower surface of the finger **17** is a groove **19** which extends between the hole **18** and the free end of the finger, and has a depth varying from a minimum adjacent the hole **18** to a maximum at the other end, so as to define a ramp **21**. The slots **13***a*, **14***a* define a similar finger **17***a* at the opposite edge of the base.

The clip **12** comprises a trough shaped base portion **23** having tabs **24** at one end thereof which are in use bent to grip and make electrical connection to a wire. At the opposite end of the portion **23**, the walls of the trough are extended upwardly to form a pair of resilient arms **25**. The arms **25** are mirror images of each other, and each comprises four distinct portions, a vertical portion

32, an inwardly inclined portion **33**, a curved portion **34** and an outwardly inclined portion **35**. The base portion **23** of each clip is stamped to define an upwardly inclined resilient tongue **26** the fixed end of which is remote from the connector tabs **24**. The portions **33** of the arms **25** are stamped to form tongues **27** which are inclined inwardly at a greater angle than the portions **33**, and the portions **34** have generally radially extending tongues **28** integral therewith, the tongues **28** extending towards one another.

To assemble the fuse holder the clip **12** is engaged in the slots at each end of the base **11**, the fingers **17** passing between the portions **32** of the arms **25** and between the base portions **23** and the tongues **27**. The tongue **26** engages the groove **19** and as the clip is pushed onto the finger **17**, the tongue **26** is flexed towards the plane of the portion **23** by the ramp **21**. When the tongue **26** corresponds with the hole **18**, it flexes back to its original position thereby locking the clip to the base **11**, the arrangement being such that the tabs **24** extend beyond the ends of the base **11** to facilitate the required connections. The portions **32** of the arms **25** are formed with outwardly directed projections **29** which ensures that the clip **12** engages tightly in the slots **13**, **14**. The other clip **12***a* is similar to the clip **12** and engages the slots **13***a*, **14***a* in similar manner.

To engage a cartridge fuse **31** with the holder, the conductive end caps of the fuse are located between the portions **35**, **35***a* of the clips, and the fuse being aligned longitudinally in the clips by the tongues **28**.

The tongues **27**, **27***a* ensure that the clips are not displaced when the fuse **31** is engaged with the clips.

It will be appreciated that the holes **18** need not extend through the fingers **17**.

The base **32** shown in FIGURES 4 and 5 is provided with six pairs of slots for receiving clips. Thus six fuses can be operatively supported if required. In a practical embodiment however only five fuses are operatively supported the clips associated with the sixth fuse position being omitted. The base **32** is formed integrally with co-acting pairs of resilient members **33**, **34** at each of the six fuse positions and when for example, only five fuses are operatively supported the members **32**, **34** at the sixth fuse position are utilized to support a spare fuse as indicated in dotted lines in FIGURES 4 and 5.

Having thus described my invention what I claim as new and desire to secure by Letters Patent is:

1. A cartridge fuse holder comprising an insulating base; at least one pair of parallel slots extending inwardly from each of two opposite edges of said base; each pair of parallel slots defining a finger of insulating base material therebetween, said finger having a retaining means; and a conductive clip slidably engaged in each pair of parallel slots, the bottom and sides of said clip having tongues which respectively engage said finger retaining means and the top of said finger to fixedly retain said clip relative to said base, the clip being adapted to support and make electrical connection with a cartridge fuse engaged therebetween.

2. A cartridge fuse holder as claimed in claim **1** wherein the bottom of said finger has a groove running from the edge of the finger to the finger retaining means which is a hole; when said clip is inserted into said pair of parallel slots said tongue on the bottom thereof being resilient is guided by the groove and snaps into said hole thereby retaining the clip relative the base.

3. A cartridge fuse holder as claimed in claim **1** wherein the outside side portions of said clip have projections

thereon to provide a snug fit when the clip is inserted in said pair of parallel slots.

4. A cartridge fuse holder as claimed in claim 1 wherein said clip has an extension extending beyond said base, the extension having tabs to enable attachment of a further electrical conductor.

5. A cartridge fuse holder as claimed in claim 1 wherein said base has co-acting pairs of insulative resilient members adjacent said pairs of parallel slots adapted to support a spare cartridge fuse when said slots are not occupied with said clips.

References Cited

UNITED STATES PATENTS

2,777,118 1/1957 Sundt ..... 200—133 X

BERNARD A. GILHEANY, *Primary Examiner.*

HIRAM B. GILSON, *Assistant Examiner.*

U.S. Cl. X.R.

337—215; 339—221