No. 773,146. PATENTED OCT. 25, 1904.

W. LUGUET, L. MINART & F. MIRON.

SUBMARINE VESSEL.

APPLICATION FILED NOV. 14, 1903.

NO MODEL.

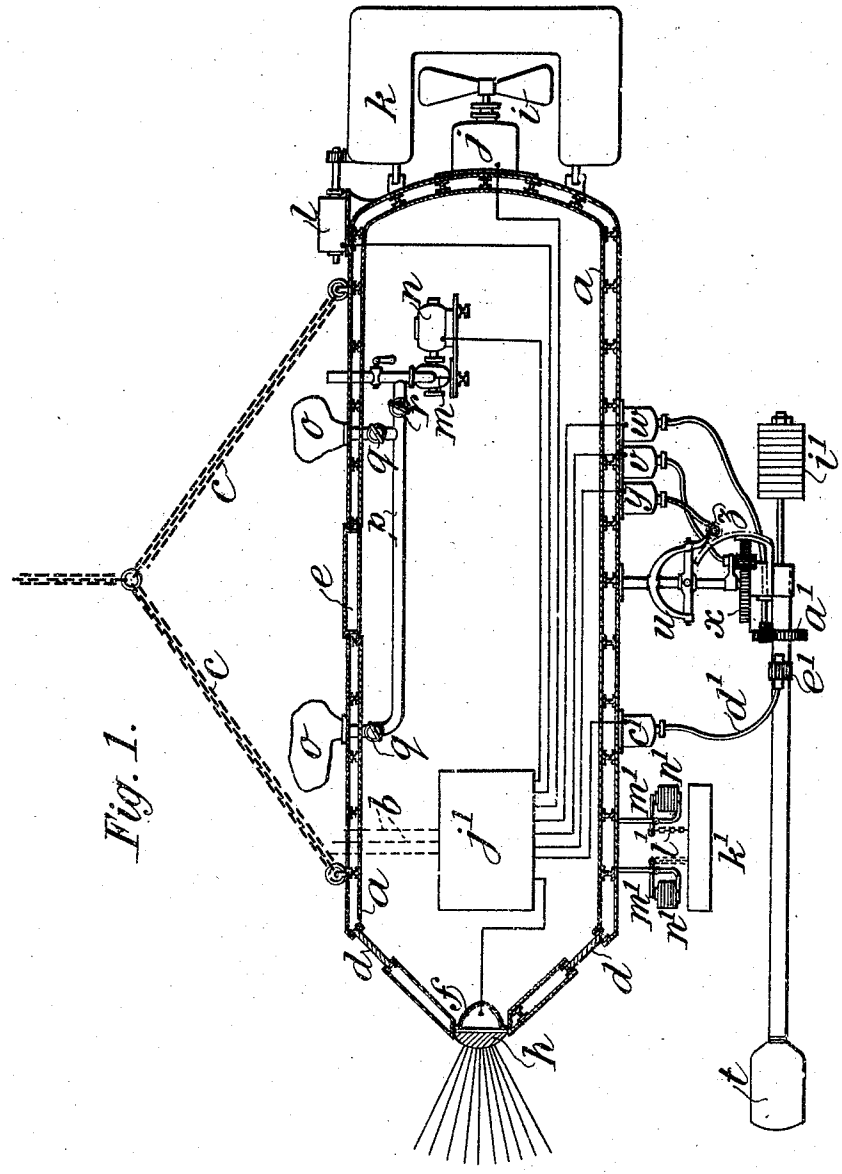

Fig. 1.

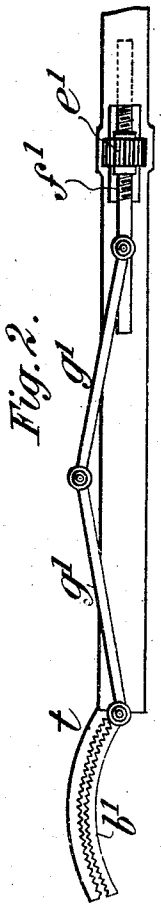

Fig. 2.

WITNESSES:

Fred Whitty

René Bruine

INVENTORS:

William Huguet, Louis Minart and Francois Miron,

By their Attorneys

Arthur G. Fraser & Co.

No. 773,146. Patented October 25, 1904.

UNITED STATES PATENT OFFICE.

WILLIAM HUGUET, LOUIS MINART, AND FRANÇOIS MIRON, OF PARIS, FRANCE.

SUBMARINE VESSEL.

SPECIFICATION forming part of Letters Patent No. 773,146, dated October 25, 1904.

Application filed November 14, 1903. Serial No. 181,254. (No model.)

To all whom it may concern:

Be it known that we, WILLIAM HUGUET, a citizen of the United States of America, and LOUIS MINART and FRANÇOIS MIRON, citizens of the Republic of France, all residing in Paris, France, have invented certain new and useful Improvements in and Connected with Submarine Vessels, of which the following is a specification.

This invention has for its object the construction of submarine vessels—such, for example, as a diving-bell—which shall be absolutely water-tight, permitting working under water at a great depth at atmospheric pressure. The necessary tools for accomplishing the work to be done, as well as the apparatus of propulsion and steering of the bell, are operated by means of electric motors carried exteriorly, which permits of employing on the outside tools of all kinds and of any number, the tools or actuating mechanism therefor being easily controlled from within the vessel, so as to operate in any desired direction and manner. The interior of the vessel does not contain any of the actuating mechanisms. These latter are controlled solely by means of a switchboard for the current which goes to the exterior motors and the lighting system. The current is transmitted to the exterior electric motors by means of an insulated wire passing through the shell and being, in effect, a part of the shell, which insures that the apparaus shall be absolutely water-tight and permits of working within it at atmospheric pressure.

The apparatus may be entirely self-contained, carrying its own electric energy, or it may be suspended by chains *c* or by a drag-chain. Where it is not self-contained, it may receive its current from an exterior source, either at the surface of the water or on the land.

Various other points of improvement are referred to in detail hereinafter.

The accompanying drawings illustrate an embodiment of the invention.

Figure 1 is a vertical section of a complete apparatus. Fig. 2 is a plan of a pincer which may be arranged on the under side of the vessel.

Referring to the embodiment illustrated, the vessel comprises a water-tight shell *a*, made either of a single sheet of steel or of several sheets mounted upon the **I**-shaped members shown. The shell *a*, Fig. 1, is provided with port-holes *d* and a manhole *e*, and within it are placed lamps *f*, the light from which is projected through port-holes, such as *h*. The vessel may be driven by screw-propellers *i* through a motor *j* and steered by a rudder *k* through a motor *l*, which actuates a toothed sector mounted on the rudder. Current is supplied through cables *b*, which pass through the shell to a switchboard *j'*. From the switchboard wires pass to the several exterior motors and to the lamps *f*. The wires pass through the shell and are fixed by means of insulating material, which is at the same time water-tight and prevents even the infiltration of the water.

By way of example we have shown the apparatus as being provided with pincers *t*, mounted on a universal joint *u*, moved horizontally by a motor *v* through a flexible shaft which operates a toothed wheel *x* or vertically by another motor *y*, which by means of another flexible shaft operates another toothed wheel *z*. The tool can be rotated on its axis by a motor *w* through a flexible shaft operating a toothed wheel *a'*. The movement of one of the jaws *b'* of the pincers is effected by a motor *c'*, which by means of a flexible shaft *d'* operates an externally-toothed fixed nut *e'*. This nut *e'* moves a screwed rod *f'* to and fro, which by means of jointed rods *g'* closes or opens the movable jaw *b'* of the pincers *t*. A suitable arrangement, such as a ratchet driven by an electromagnet, fixes each toothed wheel in the desired position and insures the pincers being permanently held in such position, the weight of the pincers being balanced by the counterweight *i'*.

The apparatus can be provided with a safety-counterweight *k'*, which may be suspended from the under side of the apparatus by means of chains *l'*, held by levers *m'*, forming the ar-

matures of electromagnets n', through which current continuously passes. If the current passing through these electromagnets be broken, they cease to attract their armatures, and the counterweight being released the apparatus automatically rises to the surface.

With a submarine vessel constructed according to our invention a descent can be made to any depth at which it may be required to carry out work, it being sufficient to give the shell a resistance relative to the depth to be attained.

We prefer to employ electromotors without brushes and collectors, such as asynchronous polyphase motors. If motors having brushes and collectors are employed, they should be inclosed in water-tight bodies or casings, the shaft passing through stuffing-boxes. A pump placed in a suitable position draws air or a suitable gas through a tube traversing the shell, compresses the air and gas, and forces it into the bodies of the motors at a pressure equal to that exerted by the water outside to prevent the latter from penetrating through the stuffing-boxes and the joints. If asynchronous polyphase motors be employed, the water-tight body can be dispensed with and the motor immersed in the water. In both cases in order to prevent leakage or reduce its ill effects it is advisable to employ motors of low tension working, for example, under five volts.

The insulating material generally employed in the construction of motors, and particularly for covering the winding-wires, would be insufficient in this case, and it becomes advisable to employ a material proof against the prolonged action of soft water or of sea-water, such material forming a layer upon the wire which is impervious to water. Caoutchouc and gutta-percha fulfil these conditions, and it is possible to utilize them in our apparatus, because the cooling of the winding is perfectly assured, which is not the case with ordinary motors exposed to the air.

Any suitable number of external motors may be employed of a power appropriate to the purpose for which they are to be utilized, which may be, for example, first, propelling by means of screws; second, steering by means of rudders; third, maintaining the stability by means of air-pumps intended to inflate to a greater or less extent air-bags placed externally; fourth, operating-tools, pincers, perforators, saws, &c.

The electromotors may act directly upon the various tools or may serve to start, stop, or regulate the movement of other kinds of motors, such as liquid air or compressed-air motors placed externally and operating the above-mentioned tools.

The use of compressed air within the motor-casing to exclude the water is not necessarily confined to motors having brushes or collectors. The same feature may be found of advantage in asynchronous polyphase motors or the like, and it is within our invention to apply a casing and a supply of compressed air to such motors.

Though we have described with great particularity of detail a specific apparatus embodying the invention, yet it is to be understood that the invention is not limited to the particular embodiment disclosed. Various modifications thereof in detail and in the arrangement and combination of the parts may be made by those skilled in the art without departure from the invention.

What we claim is—

1. A submarine apparatus provided with external tools and electric motors, and having a perfectly-water-tight shell without any moving parts passing through it, whereby the external tools may be operated under water at great depths while the internal pressure is only that of the atmosphere.

2. A submarine apparatus carrying tools and motors therefor outside of the shell of said apparatus, and a switchboard within the shell for controlling the operation of said motors.

3. A submarine apparatus carrying tools and motors therefor outside of the shell of said apparatus, said motors being of any suitable type and being controlled or regulated by electric motors.

In witness whereof we have hereunto signed our names in the presence of two subscribing witnesses.

WILLIAM HUGUET.
LOUIS MINART.
FRANÇOIS MIRON.

Witnesses:
MARCEL ARMENGAUD, Jeune,
AUGUSTUS E. INGRAM.