(12) INTERNATIONAL APPLICATION PUBLISHED UNDER THE PATENT COOPERATION TREATY (PCT)

(19) World Intellectual Property Organization
International Bureau

(43) International Publication Date
16 November 2017 (16.11.2017)

WIPO | PCT

(10) International Publication Number
WO 2017/195214 A1

(51) International Patent Classification:
H01M 8/06 (2016.01) *H01M 8/2475* (2016.01)
H01M 2/02 (2006.01)

(21) International Application Number:
PCT/IN2017/000103

(22) International Filing Date:
12 May 2017 (12.05.2017)

(25) Filing Language: English

(26) Publication Language: English

(30) Priority Data:
201621016653 12 May 2016 (12.05.2016) IN

(71) Applicant: **H2E POWER SYSTEMS PVT. LTD.** [IN/IN]; 20, Sangam Project Phase II, Wellesley Road, Near RTO office, Pune 411001, Maharashtra (IN).

(72) Inventors: **MAYUR, Siddharth Rajendra**; h2e Power Systems Pvt. Ltd., 20, Sangam Project Phase II, Wellesley Road, Near RTO office, Pune 411001, Maharashtra (IN). **CHAKRADEO, Amarnath Ashok**; h2e Power Systems Pvt. Ltd., 20, Sangam Project Phase II, Wellesley Road, Near RTO office, Pune 411001, Maharashtra (IN).

(74) Agent: **ROY CHOWDHURY, Mahua**; Royzz & Co., 2A/5A Kalpataru Estate, JV Link Road, Andheri East, Mumbai 400093, Maharashtra (IN).

(81) Designated States *(unless otherwise indicated, for every kind of national protection available)*: AE, AG, AL, AM, AO, AT, AU, AZ, BA, BB, BG, BH, BN, BR, BW, BY, BZ, CA, CH, CL, CN, CO, CR, CU, CZ, DE, DJ, DK, DM, DO, DZ, EC, EE, EG, ES, FI, GB, GD, GE, GH, GM, GT, HN, HR, HU, ID, IL, IN, IR, IS, JP, KE, KG, KH, KN, KP, KR, KW, KZ, LA, LC, LK, LR, LS, LU, LY, MA, MD, ME, MG, MK, MN, MW, MX, MY, MZ, NA, NG, NI, NO, NZ, OM, PA, PE, PG, PH, PL, PT, QA, RO, RS, RU, RW, SA, SC, SD, SE, SG, SK, SL, SM, ST, SV, SY, TH, TJ, TM, TN, TR, TT, TZ, UA, UG, US, UZ, VC, VN, ZA, ZM, ZW.

(84) Designated States *(unless otherwise indicated, for every kind of regional protection available)*: ARIPO (BW, GH, GM, KE, LR, LS, MW, MZ, NA, RW, SD, SL, ST, SZ, TZ, UG, ZM, ZW), Eurasian (AM, AZ, BY, KG, KZ, RU, TJ,

(54) Title: THERMALLY INTEGRATED HOTBOX WITH PASSIVE DEVICE

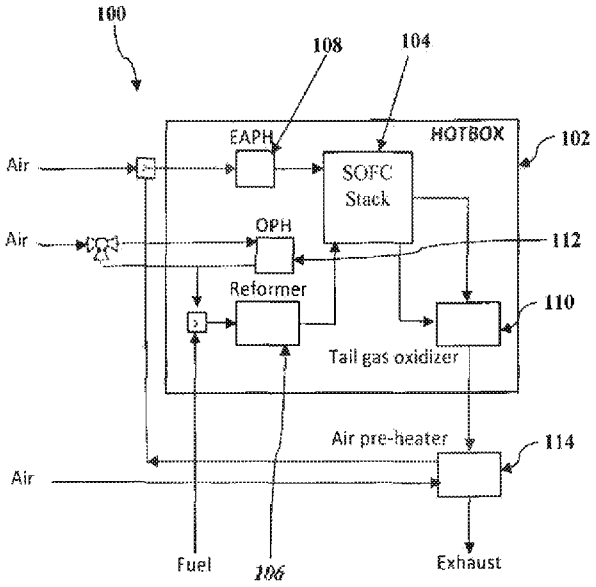

Figure 1

(57) Abstract: The present disclosure discloses a thermally integrated hotbox. The hot box may comprise a solid oxide fuel cell stack. Further the thermally integrated hotbox may comprise an electric air pre-heater configured to supply pre-heated air to the solid oxide fuel cell stack. Further a partial catalytic oxidizer may be integrated within the hotbox and connected to the solid oxide fuel cell stack. The system may further comprise a non-catalytic tail gas oxidizer connected to the solid oxide fuel cell stack.

WO 2017/195214 A1

[Continued on next page]

TM), European (AL, AT, BE, BG, CH, CY, CZ, DE, DK, EE, ES, FI, FR, GB, GR, HR, HU, IE, IS, IT, LT, LU, LV, MC, MK, MT, NL, NO, PL, PT, RO, RS, SE, SI, SK, SM, TR), OAPI (BF, BJ, CF, CG, CI, CM, GA, GN, GQ, GW, KM, ML, MR, NE, SN, TD, TG).

Declarations under Rule 4.17:

— *as to the identity of the inventor (Rule 4.17(i))*
— *as to applicant's entitlement to apply for and be granted a patent (Rule 4.17(ii))*
— *of inventorship (Rule 4.17(iv))*

Published:

— *with international search report (Art. 21(3))*
— *before the expiration of the time limit for amending the claims and to be republished in the event of receipt of amendments (Rule 48.2(h))*

THERMALLY INTEGRATED HOTBOX WITH PASSIVE DEVICE

TECHNICAL FIELD

[0001] The present invention relates to a fuel cell system and more particularly relates to a high efficiency solid oxide fuel cell (SOFC) system with a passive device.

BACKGROUND

[0002] Fuel cells generate energy by the electrochemical combination of hydrogen and oxygen. In a solid oxide fuel cell an anodic layer and a cathodic layer is separated by an electrolyte formed of a ceramic solid oxide. Further hydrogen which may be either pure or reformed from hydrocarbons, is channeled along the outer surface of the anode and diffused into the anode. Oxygen, typically from air, is channeled along the outer surface of the cathode and diffused into the cathode. Each oxygen molecule is split and dissociated into two O^{2-} anions catalytically by the cathode. The oxygen anions migrate through the crystal structure of the electrolyte and combine at the anode/electrolyte interface with four hydrogen cations to form two molecules of water and yields 4 electrons. The anode and the cathode are connected externally through a load to complete the circuit. When hydrogen is derived by "reforming" hydrocarbons such as natural gas, LPG or Biogas in the presence of limited oxygen, the "reformate" gas includes CO which is converted to CO_2 at the anode via an oxidation process similar to that performed on the hydrogen. In stationary fuel cell applications, reformed natural gas is commonly used as a fuel.

[0003] In a partial oxidation catalytic reformer fuel and air are pre-mixed under-stoichiometric molar ratio also called as "lambda", abbreviated as LMB. At a LMB ratio of 1, the provided fuel would be completely oxidized as in an open flame or standard combustion process. For an LMB below 1, the fuel is just partially oxidized, providing a hydrogen-rich reformate which is used for electrochemical conversion inside the SOFC stack. If the LMB becomes too low,

carbon deposition (soot formation) might occur in the reformer and stack, which is harmful for the equipment. If LMB is too high, the provided fuel may completely oxidize forming water and carbon di-oxide instead of hydrogen and Carbon monoxide as fuel for the fuel cell. In a standard configuration of the partial oxidation reformer (POX), fuel and air are pre-mixed at ambient temperatures, then provided to the POX, where the reactants are internally heated up to the reaction temperature and the reforming reactions take place, afterwards. Depending on the actual LMB-value, a certain reformer temperature will be established by the energy balance between reactant pre-heating (endothermal) and reforming reactions (mainly exothermal).

SUMMARY

[0004] In an aspect of the present invention, a high efficiency solid oxide fuel cell (SOFC) system with thermally integrated hot box having a passive device is disclosed.

[0005] In one implementation thermally integrated hotbox is disclosed. The hot box may comprise a solid oxide fuel cell stack. Further the thermally integrated hotbox may comprise an electric air pre-heater configured to supply pre-heated air to the solid oxide fuel cell stack. Further a partial catalytic oxidizer may be integrated within the hotbox and connected to the solid oxide fuel cell stack. The system may further comprise a non-catalytic tail gas oxidizer connected to the solid oxide fuel cell stack.

[0006] In another implementation a SOFC system may be disclosed. The system may comprise a hotbox. Further a solid oxide fuel cell stack may be integrated within the hotbox. The solid oxide fuel cell stack may be further configured to receive pre-heated air from an electric air pre-heater. Further a catalytic partial oxidation reformer may be connected to the solid oxide fuel cell stack. The system may further comprise a non-catalytic tail gas oxidizer connected to the solid oxide fuel cell stack. Further an oxidant pre-heater may be integrated within the hot box and connected to the catalytic partial oxidation reformer.

BRIEF DESCRIPTION OF THE DRAWINGS

[0007] The detailed description is described with reference to the accompanying figures.

[0008] Figure 1, illustrates a schematic of a solid oxide fuel cell (SOFC) system according to the exemplary embodiment of the present invention.

[0009] Figure 2 illustrates a SOFC in accordance with the present disclosure.

[0010] Figure 3 illustrates a wave spring compression in accordance with the present disclosure.

[0011] Figure 4 illustrates a tail gas oxidizer in accordance with the present disclosure.

DETAILED DESCRIPTION

[0012] In an exemplary embodiment of the present invention, a solid oxide fuel cell (SOFC) system is disclosed. Referring to figure 1, illustrates a system in accordance with the present disclosure. The system **100** as shown comprises a Hot Box **102**. The hot box **102** may further comprise a solid oxide fuel cell stack (SOFC) **104** integrated within the hot box **102**. The hot box **102** may further comprise a catalytic partial oxidation reformer **106** coupled to the SOFC **104**. The catalytic partial oxidation reformer **106** may be integrated within the hot box **102**. The catalytic partial oxidation reformer **106** may be configured to partially oxidize intake fuel supplied to the SOFC stack **104**. The hot box **102** may further comprise electric air pre-heater (EAPH) **108** integrated within the hot box **102** and configured to supply pre-heated air to the SOFC stack **104**. The EAPH **108**, may be configured to pre-heat intake air supplied to the SOFC stack **104**. The intake air may be at ambient temperature, in order use the air in SOFC we may need to increase the temperature of the intake air. The air from the EAPH **108** may be supplied at the cathode side of the SOFC stack **104**, during the start-up and various operational modes. In another exemplary embodiment the intake air at ambient temperature may be heated before the EAPH **108**, by re-capturing

exhaust heat from the SOFC stack **104**, via air pre-heater **114**. The air pre-heater **114** may capture the exhaust air and recirculate within the system.

[0013] The system may further comprise oxidant pre-heater (OPH) **112**. The oxidant pre-heater (OPH) **112** may be integrated within the hot box **102**. Further the oxidant pre-heater (OPH) **112** may be connected to the catalytic partial oxidation reformer **106**. The oxidant pre-heater **112** may be configured to receive intake air at the ambient temperature and further pre-heat the intake air using the exothermic heat from a non-catalytic tail gas oxidizer **110**. Further the oxidant preheater **112** may supply/feed the pre-heated air to the catalytic partial oxidation reformer **106**, to avoid the requirement of high air-fuel ratio in the catalytic partial oxidation reformer **106** and to maintain the desired temperature in the hot box **102**.

[0014] For example, at LMB of 1, i.e. under-stoichiometric molar ratio also called as air ratio or "lambda", the fuel would be completely oxidized as in an open flame or standard combustion process. While with an LMB below 1, the fuel would be partially oxidized, providing a hydrogen-rich reformate which may be used for electrochemical conversion inside the SOFC stack. Further if the LMB becomes too low, carbon deposition (soot formation) may occur in the catalytic partial oxidation reformer and solid oxide fuel cell stack. And if LMB is too high, the catalytic partial oxidation reformer may become too hot. In a standard configuration of the catalytic partial oxidation reformer, fuel and air are pre-mixed at ambient temperatures, then provided to the catalytic partial oxidation reformer, where the reactants are internally heated up to the reaction temperature and the reforming reactions take place, afterwards. In the present exemplary embodiment the oxidant pre-heater, pre-heats the ambient air before mixing with the provided fuel.

[0015] Further the oxidant pre-heater (OPH) **112** may achieve a higher outlet temperature of the catalytic partial oxidation reformer **106** with a lower LMB. For e.g. with OPH the outlet temperature of catalytic partial oxidation reformer can be maintained at 820 °C with reduced lambda 0.24 rather than having an outlet temperature of 780 °C and working with a lambda of 0.26; e.g.

the outlet temperature can be maintained at 660 °C with reduced lambda 0.33 rather than having an outlet temperature of 650 °C and working with a lambda of 0.34.

[0016] Further the non-catalytic tail gas oxidizer **110** may be connected to the solid oxide fuel cell stack **104**, wherein the non-catalytic tail gas oxidizer **110** is positioned at exhaust of the solid oxide fuel cell stack **104**.

[0017] Now referring to Figure 2 illustrating the hot box **102**, in accordance with the present disclosure. The thermally integrated hot box **102**, may comprise a solid oxide fuel cell stack **104**, an electric air pre-heater **108**, a catalytic partial oxidation reformer **106**, a non-catalytic tail gas oxidizer, and an oxidant pre-heater (OPH) **112** integrated within the hotbox **102**. Further the hot box **102**, may comprise an external thermal insulation **204** and an internal insulation **206** enclosing the various components within the hot box **102**.

[0018] The external thermal insulation **204** and the internal insulation **206** integrated within the hot box **102** may be arranged in such a way to facilitate the simultaneous heat transfer within the hot box **102** or reduce the heat dissipated from the hot box **102**. The internal insulation **206** may have high thermal conductivity allowing simultaneous heat transfer between core components of hot box **102**. The external thermal insulation **204** may have a low thermal conductivity helping to retain the heat in the hot box **102** and prevent heat loss to the external environment. The external thermal insulation **204** and the internal insulation **206** may provide a better thermal insulation to the solid oxide fuel cell stack **104**. The external thermal insulation **204** and the internal insulation **206** may further comprise multiple insulating materials. In one of the embodiments, the external thermal insulation **204** and the internal insulation **206** may be a graded insulation comprising multiple insulating materials arranged together. In a preferred embodiment, the external thermal insulation **204** and the internal insulation **206** may comprise a plurality of calcium silicate boards. Further the external thermal insulation **204** and the internal insulation **206** helps to maintain uniform heating to the solid oxide fuel cell stack **104**.

[0019] The hot box **102**, may further comprise a ceramic housing **202** integrated within the hot box **102** and positioned below the solid oxide fuel cell stack **104**. Further the non-catalytic tail gas oxidizer **110** is embedded in a form of cavity within the ceramic housing **202**.

[0020] Referring to Figure 3, illustrates a wave spring compression in accordance with the present disclosure. The hot box **102** may further comprise a plurality of wave spring **306**. In an exemplary embodiment at least four wave spring **306** may be mounted in the hot box **102** to provide compression force to the solid oxide fuel cell stack **104**. The plurality of wave spring may be mounted on ceramic rods **304**. The ceramic rods **304** may be mounted on the solid oxide fuel cell stack **104** and in a gap provided in the external thermal insulation. Further the wave springs **306**, may be mounted on stiffeners **302** at the other end. The wave springs **306**, may be mounted in a compressed position, in order to provide better axial load transmission and reduction in operating height. The at least four wave spring **306** may further be configured to compensate for thermal expansion of the hot box **102** during the operation.

[0021] Referring to Figure 4 illustrates a tail gas oxidizer in accordance with the present disclosure. The non-catalytic tail gas oxidizer **400** of the present embodiment may negate the need of conventional tail gas oxidizer requiring a catalyst and having metal components. Further the non-catalytic tail gas oxidizer **400**, may have geometric shape like a boomerang wherein the remnants, from SOFC stack **104**, i.e. the un-utilized air from cathode side and unconverted fuel from the anode side are introduced from adjacent openings **402**. The adjacent openings may be at defined angle to each other, for e.g. perpendicular to each other. The geometric shape of the non-catalytic tail gas oxidizer **400** may further enable complete burning of the remnants. The non-catalytic tail gas **400** may further comprise an opening **404**, wherein the opening **404** may act as extended combustion enabling burning of the remnant fuel.

[0022] Although the invention has been disclosed in the context of certain aspects and embodiments, it will be understood by those skilled in the art that the present invention extends beyond the specific embodiments to alternative

embodiments and/or uses of the invention and obvious implementations and equivalents thereof. Thus, it is intended that the scope of the present invention disclosed herein should not be limited by the disclosed aspects and embodiments above.

WE CLAIM:

1. A thermally integrated hotbox **102** comprising:

a solid oxide fuel cell stack **104** integrated within the hotbox **102**;

an electric air pre-heater **108** configured to supply pre-heated air to the solid oxide fuel cell stack **104**, wherein the electric air pre-heater **108** is integrated within the hotbox **102**;

a catalytic partial oxidation reformer **106** integrated within the hotbox and connected to the solid oxide fuel cell stack **104**; and

a non-catalytic tail gas oxidizer **110** connected to the a solid oxide fuel cell stack **104**, wherein the non-catalytic tail gas oxidizer **110** is positioned at exhaust of the a solid oxide fuel cell stack **104**.

2. The thermally integrated hotbox of claim 1, further comprises an oxidant pre-heater **112** is integrated within the hot box **102** and connected to the catalytic partial oxidation reformer **106**.
3. The thermally integrated hotbox of claim 2, wherein the oxidant pre-heater **112**, is further configured to capture heat from the non-catalytic tail gas oxidizer **110**.
4. The thermally integrated hotbox of claim 1, wherein the catalytic partial oxidation reformer **106** has an air ratio in range of 0.25 – 0.34 and a working temperature range of 660 degree Celsius to 820 degree Celsius.
5. The thermally integrated hotbox of claim 1, further comprises a ceramic housing **202** integrated within the hot box **102** and positioned below the solid oxide fuel cell stack **104**.
6. The thermally integrated hotbox of claim 1, wherein the non-catalytic tail gas oxidizer **110** is embedded within the ceramic housing **202**.
7. The thermally integrated hotbox of claim 1, further comprises an external thermal insulation **204** enclosing the hot box **102**
8. The thermally integrated hotbox of claim 1, further comprises an internal insulation **206** enclosing the solid oxide fuel cell stack **104**, the electric air pre-

heater **108**, the catalytic partial oxidation reformer **106**, the non-catalytic tail gas oxidizer **110**, and the oxidant pre-heater **112**.

9. A system comprising:

a hotbox **102**;

a solid oxide fuel cell stack **104** integrated within the hotbox **102**;

an electric air pre-heater **108** configured to supply pre-heated air to the solid oxide fuel cell stack **104**, wherein the electric air pre-heater **108** integrated within the hotbox **102** and is configured to pre-heat ambient air before entering the solid oxide fuel cell stack **104**;

a catalytic partial oxidation reformer **106** integrated within the hotbox and connected to the solid oxide fuel cell stack integrated **104**, wherein the catalytic partial oxidation reformer **106** is configured to supply fuel to the solid oxide fuel cell stack **104**;

a non-catalytic tail gas oxidizer **110** connected to the solid oxide fuel cell stack **104**, wherein the tail gas oxidizer **110** is positioned at exhaust of the solid oxide fuel cell stack **104**; and

an oxidant pre-heater **112** is integrated within the hot box **102** and connected to the catalytic partial oxidation reformer **106** wherein the oxidant pre-heater **112** pre-heats reactants before releasing the reactants into the catalytic partial oxidation reformer **106**.

10. The system of claim 9, wherein the oxidant pre-heater **112**, is configured capture heat from the non-catalytic tail gas oxidizer **110**.

11. The system of claim 9, wherein the catalytic partial oxidation reformer **106** has an air ratio in range of 0.25 – 0.34 and a working temperature range of 660 degree Celsius to 820 degree Celsius.

12. The system of claim 9, further comprises ceramic housing **202** integrated within the hot box **102** and positioned below the solid oxide fuel cell stack **104.**

13. The system of claim 9, wherein the non-catalytic tail gas oxidizer **110** is embedded within the ceramic housing **202.**

14. The system of claim 9, further comprises an internal insulation **206** enclosed within the hot box **102**

15. The system of claim 14, wherein the internal insulation **204** encloses the solid oxide fuel cell stack **104,** the electric air pre-heater **108,** the catalytic partial oxidation reformer **106,** the non-catalytic tail gas oxidizer **110,** and the oxidant pre-heater **112.**

16. The systefn of claim 9, further comprises a plurality of wave springs **306,** wherein the plurality of wave spring are mounted between the solid oxide fuel stack and an external thermal insulation **204.**

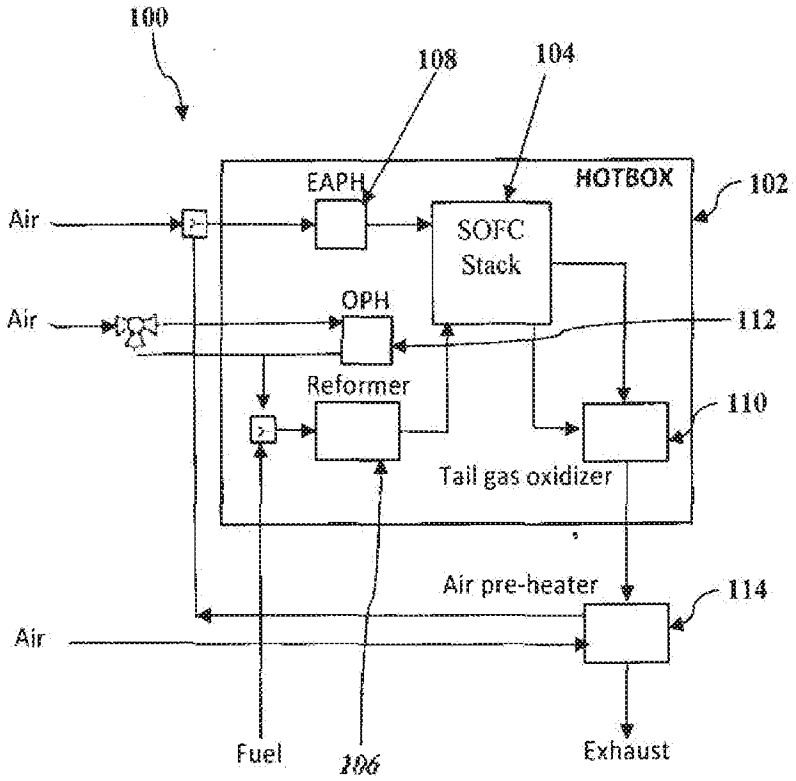
100
108
104
EAPH
HOTBOX
102
Air
SOFC
Stack
OPH
Air
112
Reformer
110
Tail gas oxidizer
Air pre-heater
114
Air
Fuel
106
Exhaust

Figure 1

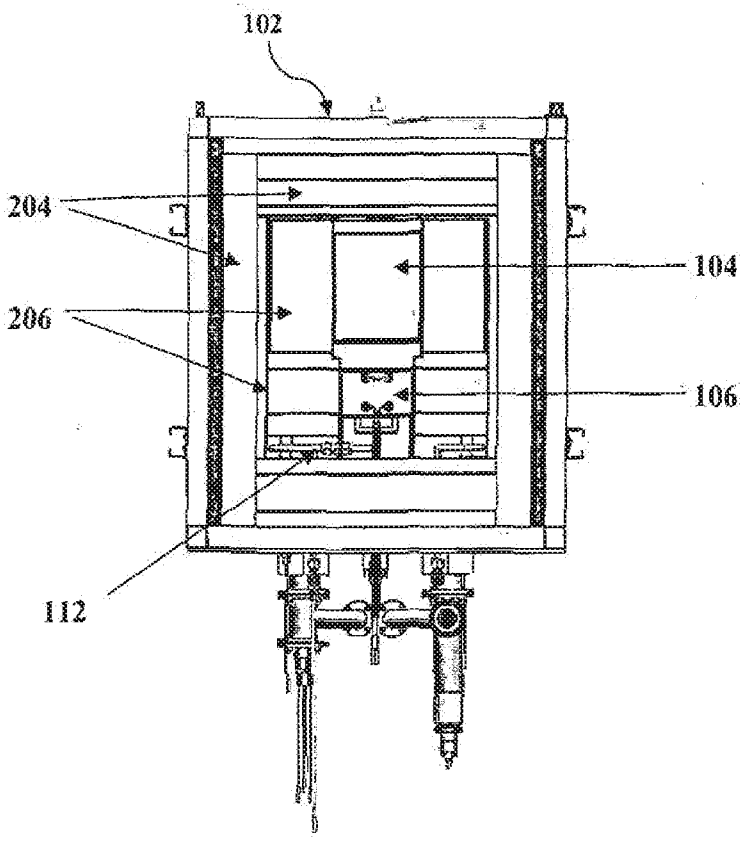

Figure 2

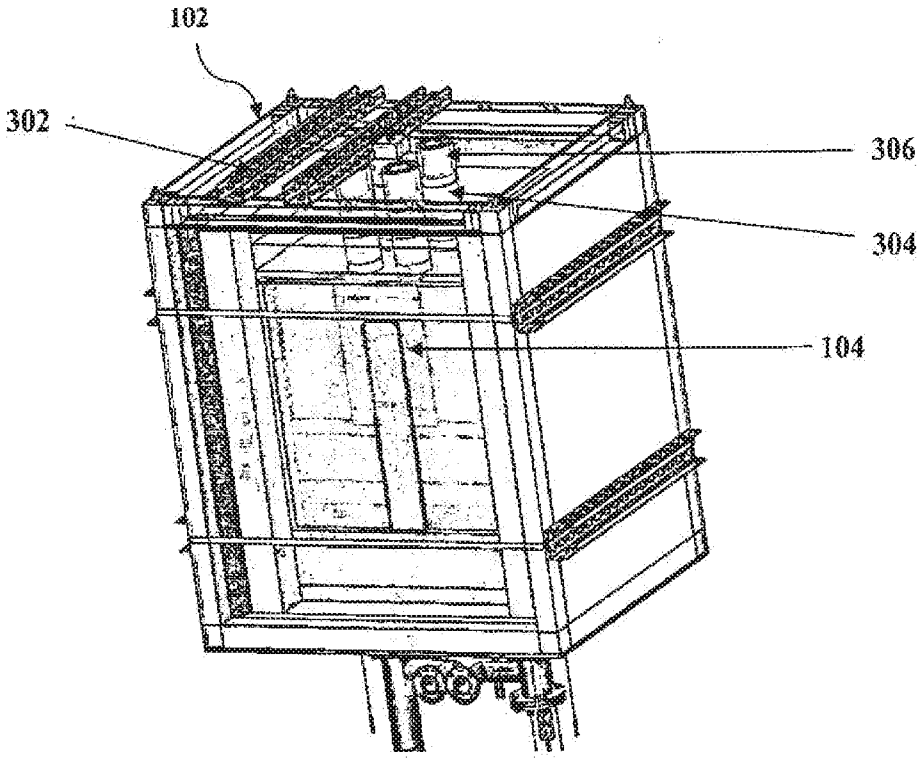

Figure 3

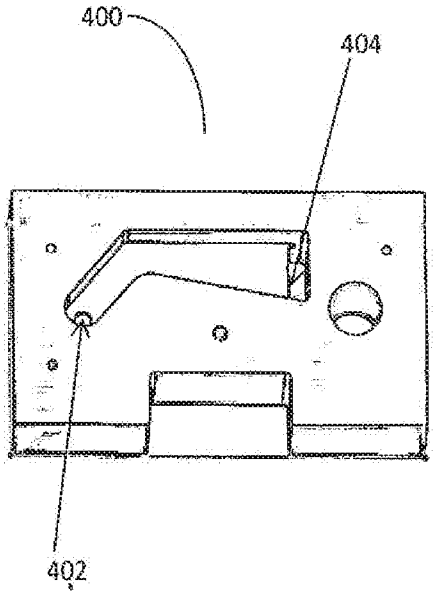

Figure 4

INTERNATIONAL SEARCH REPORT

International application No.
PCT/IN2017/000103

A. CLASSIFICATION OF SUBJECT MATTER

IPC(8) - H01M 8/06; H01M 2/02; H01M 8/2475 (2017.01)

CPC - H01M 8/0618; H01M 2/02; H01M 2/045; H01M 8/06; H01M 8/0625 (2017.08)

According to International Patent Classification (IPC) or to both national classification and IPC

B. FIELDS SEARCHED

Minimum documentation searched (classification system followed by classification symbols)

See Search History document

Documentation searched other than minimum documentation to the extent that such documents are included in the fields searched

USPC - 429/148; 429/153; 429/163; 429/177; 429/423 (keyword delimited)

Electronic data base consulted during the international search (name of data base and, where practicable, search terms used)

See Search History document

C. DOCUMENTS CONSIDERED TO BE RELEVANT

Category*	Citation of document, with indication, where appropriate, of the relevant passages	Relevant to claim No.
Y	US 6,608,463 B1 (KELLY et al) 19 August 2003 (19.08.2003) entire document	1-16
Y	US 2008/0271785 A1 (LI) 06 November 2008 (06.11.2008) entire document	1-16
Y	US 2002/0076599 A1 (NEUTZLER et al) 20 June 2002 (20.06.2002) entire document	5, 6, 12, 13
Y	US 2010/0151361 A1 (ADAMS et al) 17 June 2010 (17.06.2010) entire document	16
A	US 2009/0029204 A1 (VENKATARAMAN) 29 January 2009 (29.01.2009) entire document	1-16

☐ Further documents are listed in the continuation of Box C. ☐ See patent family annex.

* Special categories of cited documents:

"A" document defining the general state of the art which is not considered to be of particular relevance

"E" earlier application or patent but published on or after the international filing date

"L" document which may throw doubts on priority claim(s) or which is cited to establish the publication date of another citation or other special reason (as specified)

"O" document referring to an oral disclosure, use, exhibition or other means

"P" document published prior to the international filing date but later than the priority date claimed

"T" later document published after the international filing date or priority date and not in conflict with the application but cited to understand the principle or theory underlying the invention

"X" document of particular relevance; the claimed invention cannot be considered novel or cannot be considered to involve an inventive step when the document is taken alone

"Y" document of particular relevance; the claimed invention cannot be considered to involve an inventive step when the document is combined with one or more other such documents, such combination being obvious to a person skilled in the art

"&" document member of the same patent family

Date of the actual completion of the international search	Date of mailing of the international search report
22 September 2017	10 OCT 2017
Name and mailing address of the ISA/US Mail Stop PCT, Attn: ISA/US, Commissioner for Patents P.O. Box 1450, Alexandria, VA 22313-1450 Facsimile No. 571-273-8300	Authorized officer Blaine R. Copenheaver PCT Helpdesk: 571-272-4300 PCT OSP: 571-272-7774