(12) INTERNATIONAL APPLICATION PUBLISHED UNDER THE PATENT COOPERATION TREATY (PCT)

(19) World Intellectual Property Organization
International Bureau

(43) International Publication Date
05 July 2018 (05.07.2018)

WIPO | PCT

(10) International Publication Number
WO 2018/125866 A1

(51) International Patent Classification:
G06F 19/00 (2018.01)

(21) International Application Number:
PCT/US2017/068417

(22) International Filing Date:
26 December 2017 (26.12.2017)

(25) Filing Language: English

(26) Publication Language: English

(30) Priority Data:
62/439,799 28 December 2016 (28.12.2016) US
15/852,913 22 December 2017 (22.12.2017) US

(71) Applicant: **HYDRO-AIRE, INC.** [US/US]; 3000 Winona Avenue, Burbank, California 91504 (US).

(72) Inventor: **SLATKIN, Andrew Brett**; 5358 Veloz Avenue, Tarzana, California 91356 (US).

(74) Agent: **PAUL, James W.**; FULWIDER PATTON LLP, 6100 Wilshire Boulevard, Suite 1200, Los Angeles, California 90045 (US).

(81) Designated States *(unless otherwise indicated, for every kind of national protection available)*: AE, AG, AL, AM, AO, AT, AU, AZ, BA, BB, BG, BH, BN, BR, BW, BY, BZ, CA, CH, CL, CN, CO, CR, CU, CZ, DE, DJ, DK, DM, DO, DZ, EC, EE, EG, ES, FI, GB, GD, GE, GH, GM, GT, HN, HR, HU, ID, IL, IN, IR, IS, JO, JP, KE, KG, KH, KN, KP, KR, KW, KZ, LA, LC, LK, LR, LS, LU, LY, MA, MD, ME, MG, MK, MN, MW, MX, MY, MZ, NA, NG, NI, NO, NZ, OM, PA, PE, PG, PH, PL, PT, QA, RO, RS, RU, RW, SA, SC, SD, SE, SG, SK, SL, SM, ST, SV, SY, TH, TJ, TM, TN, TR, TT, TZ, UA, UG, US, UZ, VC, VN, ZA, ZM, ZW.

(84) Designated States *(unless otherwise indicated, for every kind of regional protection available)*: ARIPO (BW, GH, GM, KE, LR, LS, MW, MZ, NA, RW, SD, SL, ST, SZ, TZ, UG, ZM, ZW), Eurasian (AM, AZ, BY, KG, KZ, RU, TJ, TM), European (AL, AT, BE, BG, CH, CY, CZ, DE, DK, EE, ES, FI, FR, GB, GR, HR, HU, IE, IS, IT, LT, LU, LV,

(54) Title: SYSTEM AND METHOD FOR SIMPLIFIED AIRCRAFT BRAKE DISTANCE ESTIMATION

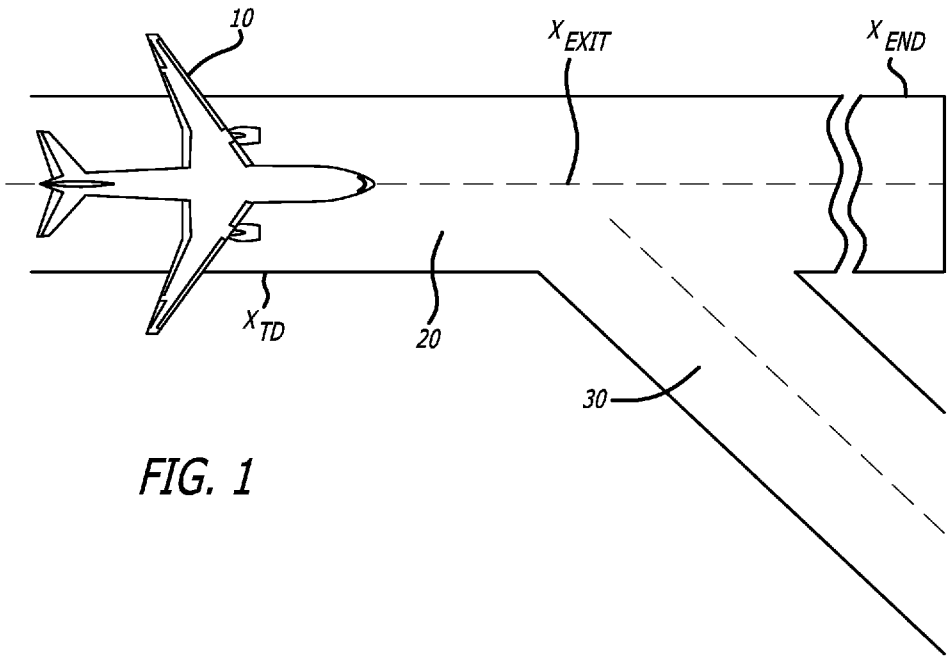

FIG. 1

(57) Abstract: A braking system and method utilizing a simplified estimate of a distance between two locations on the earth based on spherical geometry. A braking system utilizing the aforementioned simplified estimate does not require computationally intensive calculations and is more efficient and better equipped to handle real-time generation of distance estimates for braking needs and variable conditions. In the present invention, geodesics evaluations are not used; rather, a modified Haversine formula that simplifies computations is used, including a one-time computation of the cosine of latitude coordinate.

WO 2018/125866 A1

[Continued on next page]

MC, MK, MT, NL, NO, PL, PT, RO, RS, SE, SI, SK, SM, TR), OAPI (BF, BJ, CF, CG, CI, CM, GA, GN, GQ, GW, KM, ML, MR, NE, SN, TD, TG).

Published:

— *with international search report (Art. 21(3))*

SYSTEM AND METHOD FOR SIMPLIFIED AIRCRAFT BRAKE DISTANCE ESTIMATION

CROSS-REFERENCES TO RELATED APPLICATIONS

[0001] This application claims priority from U.S. Provisional Patent Application No. 62/439,799, filed December 28, 2016, the contents of which are incorporated by reference herein in its entirety.

BACKGROUND

[0002] Aircraft manufacturers are incorporating new advanced braking systems that are designed to minimize the amount of time that an aircraft occupies an airport runway upon landing. Minimizing runway occupancy time improves the efficiency and safety of the runways and maximizes the use of the airport's resources. To minimize an aircraft's duration of the runway usage, the aircraft must decelerate from its touchdown speed to a safe taxiing speed in the most expeditious manner. For safety and reduced wear and tear on the aircraft, it is important to have the aircraft safely brake in a controlled manner that is neither too quickly nor too slowly. In use, these systems allow a pilot to select a desired runway to land and exit the aircraft, and the braking system will decelerate the aircraft hard enough, but just hard enough, to slow the plane to taxi speed by the turnoff that leads to the desired taxiway or terminal. Once the pilot selects the appropriate runway exit during the approach to landing, the system regulates the aircraft's deceleration after touchdown. This enables the aircraft to reach any chosen exit at the correct speed under optimum conditions, no matter what the prevailing conditions are, including poor weather and visibility. A focus of these new systems is that they optimize the braking so that the aircraft gets to the taxiway intersection sooner (i.e., the aircraft does not decelerate too hard too soon, keeping speed up to minimize time spent on the runway) and also prevents overshooting of the intersection, which would then result in a relatively slow taxi to the next available turn off.

[0003] One such system is proposed in United States Patent No. 9,102,404 entitled Method For Controlling The Deceleration On The Ground Of A Vehicle, the contents of which are incorporated herein by reference. In order to determine the appropriate braking force needed to precisely decelerate the vehicle, several parameters must be known. One very important consideration is the determination of a precise distance estimate between vehicle touchdown and exit location/runway overshoot location; furthermore, the distance estimate between the aircraft's current position and the desired exit point would be

continuously computed as the aircraft decelerates on the runway. Some navigational systems rely on a branch of spherical mathematics called geodesics to calculate the distances between points on or above the Earth. A common approach is that proposed by Sodano and Robinson in their paper, "Direct And Inverse Solutions Of Geodesics" U.S. Army's Technical Report No. 7. For integration of real-time, braking distance calculations into aircraft that utilize geodesics in the navigation software may require a form of this type of mathematics.

[0004] The problem with the use of geodesics to conduct distance calculations is that they require an iterative approach to arrive at a solution, which is taxing on a computational system such as a brake system controller, especially when the computations are required in real-time. In many cases, the distance calculations can overwhelm the system. What is needed is a simplified approach that preserves the necessary accuracy of the braking system runway distance estimates but can reduce the calculations to arithmetic functions rather than iterative functions.

[0005] By using a simplified aircraft brake distance estimation, calculations can be performed continuously in real-time that precisely determine and control braking to achieve the desired speed when the aircraft reaches the selected taxiway exit. Additionally, by using this simplified aircraft brake distance estimation, calculations can be used to create a warning of potential runway end excursions and/or initiate braking actions to prevent runway end excursions. These calculations can be used to create a “landing long” warning and aggressively control braking to make up for the shortened available runway distance if an airplane lands too far along the length of the runway. In keeping with this added functionality, these calculations could be used to warn if sufficient runway is not available even prior to touchdown.

SUMMARY OF THE INVENTION

[0006] The present invention is a braking system and method utilizing a simplified estimate of a distance between two locations on the earth based on spherical geometry where the distance between the two points is relatively small. A braking system utilizing the aforementioned simplified estimate is more efficient and better equipped to handle rapidly changing estimates for braking needs and variable conditions, making the braking system more robust than prior art systems. In the present invention, geodesics evaluations are replaced with a modified Haversine formula that can include a one-time computation of the cosine of latitude coordinate using, if appropriate, a truncated power series calculation.

[0007] These and other features of the present invention will best be understood with reference to the detailed description of the preferred embodiment provided below.

BRIEF DESCRIPTION OF THE DRAWINGS

[0008] FIG. 1 a top view of an aircraft on a landing strip/airport runway;

[0009] FIG. 2 is a schematic showing the earth's radius and the distance approximation;

[0010] FIG. 3 is a schematic diagram of a system for applying a braking force to a landing gear; and

[0011] FIG. 4 is a flow chart illustrating a method of the present invention.

DETAILED DESCRIPTION OF THE PREFERRED EMBODIMENTS

[0012] Figure 1 illustrates a first preferred embodiment and application of the present invention, generally depicting an aircraft 10 landing on a runway having an exit ramp 30. We can identify a location on the runway X_{TD} where the aircraft touches down, and this value can be updated to the aircraft's present position on the runway if necessary. The location on the runway where the aircraft must exit the runway is designated X_{EXIT}, where the goal is to decelerate the aircraft to the exit location as quickly and as safely as possible to make room for other landing aircraft or aircraft taking off. Therefore, the goal of the invention is to reduce the time that the aircraft takes in getting from X_{TD} to X_{EXIT} while applying all of the necessary safety regulations and factors. That is, the aircraft must be brought from its landing speed to a desired taxiing speed in a manner that minimizes the residency time of the aircraft on runway 20. X_{END} represents the end of the runway for use in generating pilot warnings for potential runway excursions.

[0013] The present invention applies a specific braking force using the aircraft's braking system autobrake functionality. When a pilot preselects a taxiway at which the aircraft will exit the designated runway, the autobrake control manages the deceleration in manner such that the aircraft is moving at a preselected velocity as it reaches the runway exit with the minimal amount of time on the runway, within safety and protocol standards. The invention dynamically determines the brake to exit distance using a modified Haversine formula with a small angle approximation that reduces to an arithmetic calculation.

[0014] For any two points on a sphere, the Haversine of the central angle between them is given by

$$\operatorname{hav}\left(\frac{d}{r}\right) = \operatorname{hav}(\varphi_2 - \varphi_1) + \cos(\varphi_1)\cos(\varphi_2)\operatorname{hav}(\lambda_2 - \lambda_1)$$

where **hav** is the Haversine function:

$$\operatorname{hav}(\theta) = \sin^2\left(\frac{\theta}{2}\right) = \frac{1 - \cos(\theta)}{2}$$

d is the distance between the two points (along a great circle of the sphere; see spherical distance)

r is the radius of the sphere (see Figure 2),

φ_1, φ_2: latitude of point 1 and latitude of point 2, in radians

λ_1, λ_2: longitude of point 1 and longitude of point 2, in radians

Solving for **d**, one can obtain the following formula:

$$= 2r\arcsin\left(\sqrt{\sin^2\left(\frac{\varphi_2 - \varphi_1}{2}\right) + \cos(\varphi_1)\cos(\varphi_2)\sin^2\left(\frac{\lambda_2 - \lambda_1}{2}\right)}\right)$$

[0015] This represents the distance between two points on a sphere having an radius r at the respective latitude and longitudes. Note that in relation to the size of the earth, for applications where the distances are on a runway of an airport then $|\varphi_2 - \varphi_1| \ll 1$ and $|\lambda_2 - \lambda_1| \ll 1$. Therefore, the preceding equation can be reduced to

[0016] $$d = 2r\sin^{-1}\left(\sqrt{\frac{1}{4}(\varphi_2 - \varphi_1)^2 + \frac{\cos\varphi_1\cos\varphi_2}{4}(\lambda_2 - \lambda_1)^2}\right)$$

[0017] If $|\varphi_2 - \varphi_1| \ll 1$, then $\varphi_2 \approx \varphi_1$ and $\cos\varphi_2 \approx \cos\varphi_1 \rightarrow \cos\varphi_1\cos\varphi_2 \approx \cos^2\varphi_1$

[0018] This leads to

[0019] $$d = 2r\sin^{-1}\left(\frac{1}{2}\sqrt{(\varphi_2 - \varphi_1)^2 + (\cos\varphi_1)^2 (\lambda_2 - \lambda_1)^2}\right)$$

[0020] Here, the term inside the $\sin^{-1}$ function is much smaller than 1 because $(\varphi_2 - \varphi_1)^2$ and $(\lambda_2 - \lambda_1)^2$ are individually much less than 1, and for any φ_1, $0 \leq \cos^2 \varphi_1 \leq 1$. Therefore, since for small angles, α: $\alpha \approx \sin \alpha \approx \sin^{-1}\alpha$, then the equation further reduces to

[0021] $$d = 2r(\tfrac{1}{2})\sqrt{(\varphi_2 - \varphi_1)^2 + (\cos \varphi_1)^2(\lambda_2 - \lambda_1)^2}$$

[0022] $$d = r\sqrt{(\varphi_2 - \varphi_1)^2 + (\cos \varphi_1)^2 (\lambda_2 - \lambda_1)^2}$$

[0023] Since $\cos^2 \varphi_1 = \tfrac{1}{2}[1 + \cos 2 \varphi_1]$, the equation can also be written as

[0024] $$d = \sqrt{(\varphi_2 - \varphi_1)^2 + \tfrac{1}{2}[1 + \cos 2 \varphi_1](\lambda_2 - \lambda_1)^2}$$

[0025] The cosine term in this equation can be evaluated using a look-up table of values stored in a the memory of the braking system's processor, or other known approximations for the trigonometric function. Since this term is a constant throughout the braking run, it only has to be computed or looked up once at or before the beginning of the braking run.

[0026] Also, the cosine function can be written as a power series:

[0027] $$\cos \varphi_1 = 1 - (1/2!)[\varphi_1^2] + (1/4!)[\varphi_1^4] - \ldots$$

[0028] Thus, another method for approximating the cosine term in the distance calculation would be to compute it to sufficient accuracy using an appropriate number of terms of this power series. Using a truncated power series approximation for the cosine term (done only once per braking run), the simplified distance equation is therefore reduced to a number of arithmetic calculations that can easily be handled dynamically by a brake control system processor.

[0029] The aircraft's navigation system provides longitude and latitude coordinates, φs and λs, as necessary to complete the calculations for the distance determination. With the simplification described above, there are no iterative computations needed and the distance can be readily determined quickly and without undue computational processing.

[0030] To implement an autobraking system that utilizes the foregoing approximations, Figure 3 illustrates a schematic diagram of a processor 50 of an aircraft's braking system that is equipped with a distance approximation module using the Haversine approximation. The aircraft's navigation system 35 provides geodetic data to the processor 50, which converts the

data to a position of the aircraft on the earth's spherical surface. Using known positions of the runway exits, the distance upon touchdown to the runway exit can be determined using the power series approximation of the cosine of θ. Once the distance is obtained to the runway exit, the processor 50 calculates the necessary deceleration and sends the appropriate commands to a braking actuator 60 to apply a braking force to the aircraft wheels. The processor can also receive data from wheel speed sensor 70, and environmental conditions such as runway surface condition, wind speed, temperature, maximum velocity, etc. from flight deck input 80. The processor 50 applies all of the inputs and conditions, and sends the braking commands to brake actuator 60 for decelerating the aircraft according to the minimum residency protocol.

[0031] Figure 4 illustrates a flow control diagram for a method of braking the aircraft according to the present invention. In step 100, the aircraft's navigation system provides a current position of the aircraft using geodetic data. In step 110, the braking system determines a distance from its current location to a predetermined runway exit from the geodetic data using a Haversine formula. Once the distance is obtained, the braking system in step 120 generates desired kinematics for the aircraft to travel from touchdown to a runway exit that minimizes the residency time of the aircraft on the runway. In step 130, the velocity profile is used to generate aircraft wheel braking commands using the distance determination and current speed and position of the aircraft. The braking commands are communicated in step 140 to the brake actuator, which in turn applies a braking force to the aircraft wheels consistent with the velocity profile in step 150. Note that other inputs may be preferably incorporated into the processor for determining the velocity profile, including current weather conditions, runway surface conditions, weight of the aircraft, etc.

[0032] While the inventor has described some of the preferred embodiments of the present invention, the invention should not be construed so as to be limited to the embodiments depicted and described herein. Rather, the scope of the invention is governed by the appended claims, without limitation to any specific embodiment or illustration.

We Claim:

1. A braking system for reducing a speed of an aircraft, comprising:

a processor, including memory for storing a program for calculating braking parameters;

a wheel speed sensor communicating with the processor;

a braking actuator responsive to commands from the processor;

an aircraft navigation system that provides current aircraft position data and position data for a desired runway exit to the processor in the form of longitude and latitude coordinates; and

wherein the processor uses a small angle simplification for the Haversine formula to estimate the distance between a current position and the desired runway exit; and

wherein the processor commands the braking actuator to reduce the speed of the aircraft based on the calculation of the distance between the current position and the desired runway exit.

2. The braking system for reducing a speed of an aircraft of Claim 1, wherein the braking system uses a preselected exit position to determine the braking actuator's reduction of the aircraft speed to minimize a residency time on a runway.

3. The braking system of Claim 1, wherein the estimate of the distance between the current position and the desired runway exit computes the cosine of the latitude angle using a truncated power series.

4. The braking system of Claim 1, wherein the estimate of the distance between the current position and the desired runway exit computes the cosine of the latitude angle using a lookup table.

5. A method for adjusting instantaneous deceleration of an aircraft to minimize an occupancy of an aircraft on a runway, comprising:

obtaining a current position of the aircraft after touchdown using geodetic data;

generating a deceleration profile for the aircraft to travel from touchdown to a desired runway exit with a desired exit taxi speed;

determining a distance from a current location to a runway exit from the geodetic data using a small angle derivation of the Haversine formula for distance estimation;

generating a deceleration profile using the distance determination and current speed and position of the aircraft;

and commanding a brake actuator based on the generated deceleration profile.

6. The method of Claim 5, wherein the determination of the distance between the current position and the desired runway exit computes the cosine of a latitude angle using a truncated power series.

7. The method of Claim 5, wherein the determination of the distance between the current position and the desired runway exit computes the cosine of a latitude angle using a lookup table.

8. A braking system for reducing a speed of an aircraft, comprising:

a processor, including memory for storing a program for calculating braking parameters;

a wheel speed sensor communicating with the processor;

a braking actuator responsive to commands from the processor;

an aircraft navigation system providing current aircraft position data as well as position data for an end of a runway to the processor in the form of longitude and latitude coordinates; and

wherein the processor uses a small angle simplification for a Haversine formula to calculate a distance between a current position and the end of the runway; and

wherein the processor generates a deceleration profile and issues a warning signal if there is potential for a runway overrun/excursion.

9. The braking system of Claim 8, wherein the deceleration profile and warning signal are generated prior to and after aircraft touchdown on the runway.

10. The braking system of Claim 8, wherein the calculation of the distance between the current position and the end of the runway computes the cosine of the latitude angle using a truncated power series.

11. The braking system of Claim 8, wherein the calculation of the distance between the current position and the end of the runway exit computes the cosine of the latitude angle using a lookup table.

12. A method for reducing a speed of an aircraft, comprising:

obtaining a current position of the aircraft after touchdown using geodetic data;

generating a deceleration profile for the aircraft to travel from touchdown to a desired runway exit with a desired exit taxi speed;

determining a distance from a current location to a runway exit from the geodetic data using a small angle derivation of the Haversine formula for distance estimation;

generating a deceleration profile using the distance determination and current speed and position of the aircraft;

commanding a brake actuator based on the generated deceleration profile; and

generating a deceleration profile and issuing a warning signal to the cockpit if there is potential for a runway overrun/excursion.

13. The method of Claim 12, wherein the deceleration profile and warning signal are generated prior to and after aircraft touchdown on the runway.

14. The method of Claim 12, wherein the calculation of the distance between the current position and the end of the runway computes the cosine of the latitude angle using a truncated power series.

15. The method of Claim 12, wherein the calculation of the distance between the current position and the end of the runway computes the cosine of the latitude angle using a lookup table.

16. A braking system for reducing a speed of an aircraft, comprising:

a processor, including memory for storing a program for calculating braking parameters;

a wheel speed sensor communicating with the processor;

a braking actuator responsive to commands from the processor;

an aircraft navigation system that provides current aircraft position data and position data for an end of a runway to the processor in the form of longitude and latitude coordinates; and

wherein the processor uses a small angle simplification for the Haversine formula to calculate the distance between the current position and the end of the runway; and

wherein the processor commands the braking actuator to initiate maximum braking force when the processor determines that the aircraft will experience a runway overrun/excursion.

17. The braking system of Claim 16, wherein the calculation of the distance between the current position and the end of the runway computes the cosine of the latitude angle using a truncated power series.

18. The braking system of Claim 16, wherein the calculation of the distance between the current position and the end of the runway computes the cosine of the latitude angle using a lookup table.

19. The braking system of Claim 16, further including the step of generating a warning signal when the processor determines that the aircraft will experience a runway overrun/excursion.

20. A method for reducing a speed of an aircraft, comprising:

providing a processor, including memory for storing a program for calculating braking parameters;

locating a wheel speed sensor adjacent a landing gear wheel for communicating with the processor;

providing a braking actuator responsive to commands from the processor;

incorporating an aircraft navigation system that provides current aircraft position data and position data for an end of a runway to the processor in the form of longitude and latitude coordinates;

using a small angle simplification for the Haversine formula to calculate the distance between the current position and the end of the runway; and

commanding the braking actuator to initiate maximum braking force when the processor determines that the aircraft will experience a runway overrun/excursion.

21. The method of Claim 20, wherein the calculation of the distance between the current position and the end of the runway computes the cosine of the latitude angle using a truncated power series.

22. The method of Claim 20, wherein the calculation of the distance between the current position and the end of the runway computes the cosine of the latitude angle using a lookup table.

23. The method of Claim 20, further including the step of generating a warning signal when the processor determines that the aircraft will experience a runway overrun/excursion.

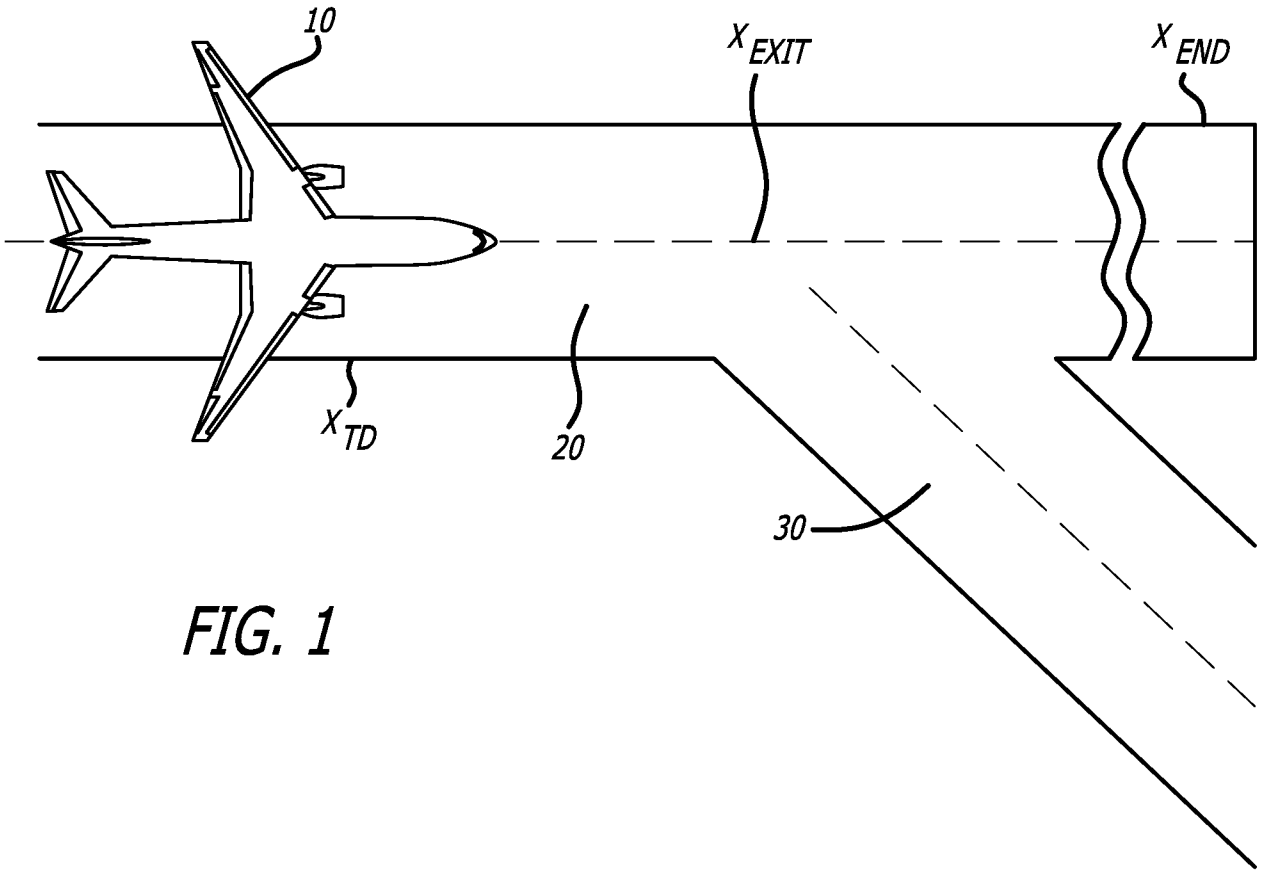
10
X_{EXIT}
X_{END}
X_{TD}
20
30

FIG. 1

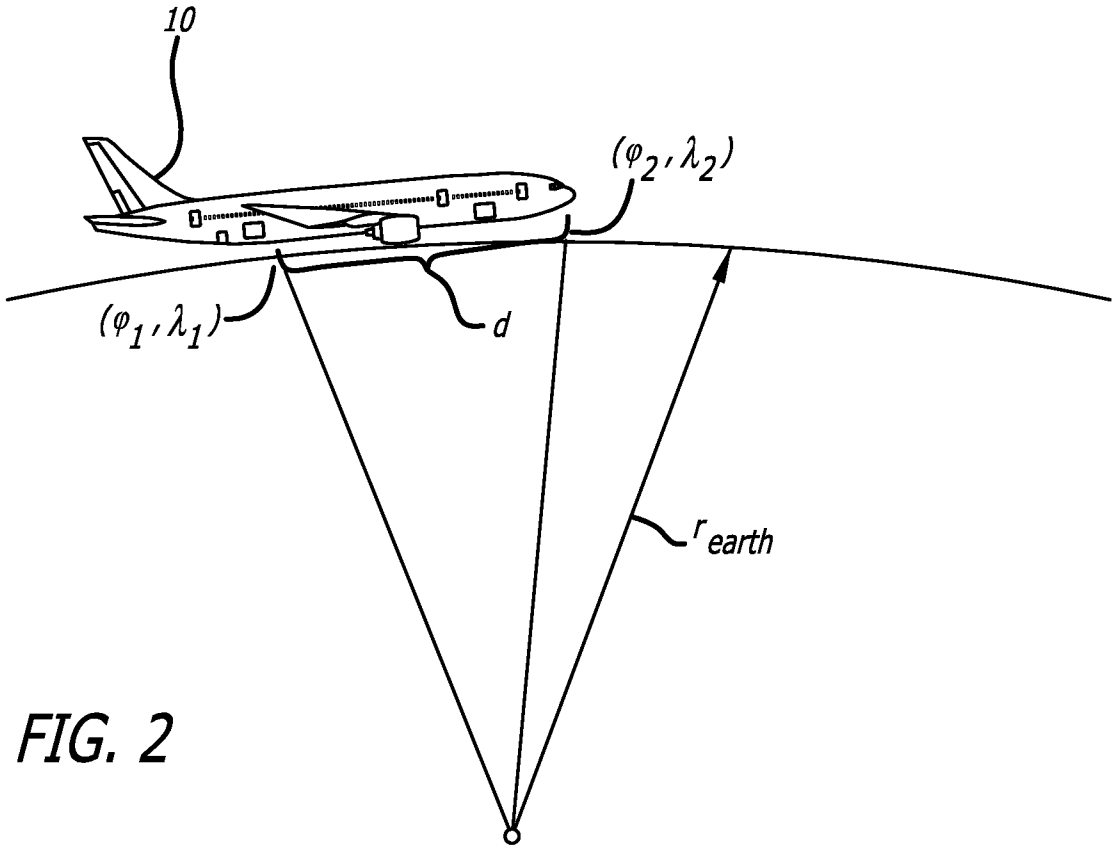
10
(φ_2, λ_2)
(φ_1, λ_1)
d
r_{earth}

FIG. 2

FIG. 3

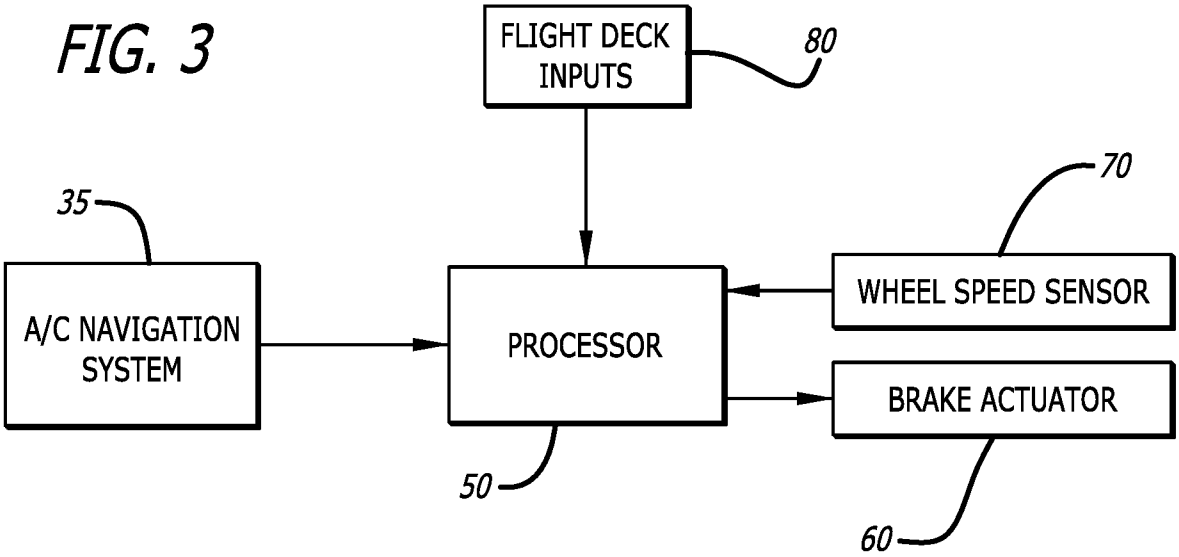
FLIGHT DECK INPUTS
80
35
A/C NAVIGATION SYSTEM
PROCESSOR
70
WHEEL SPEED SENSOR
BRAKE ACTUATOR
50
60

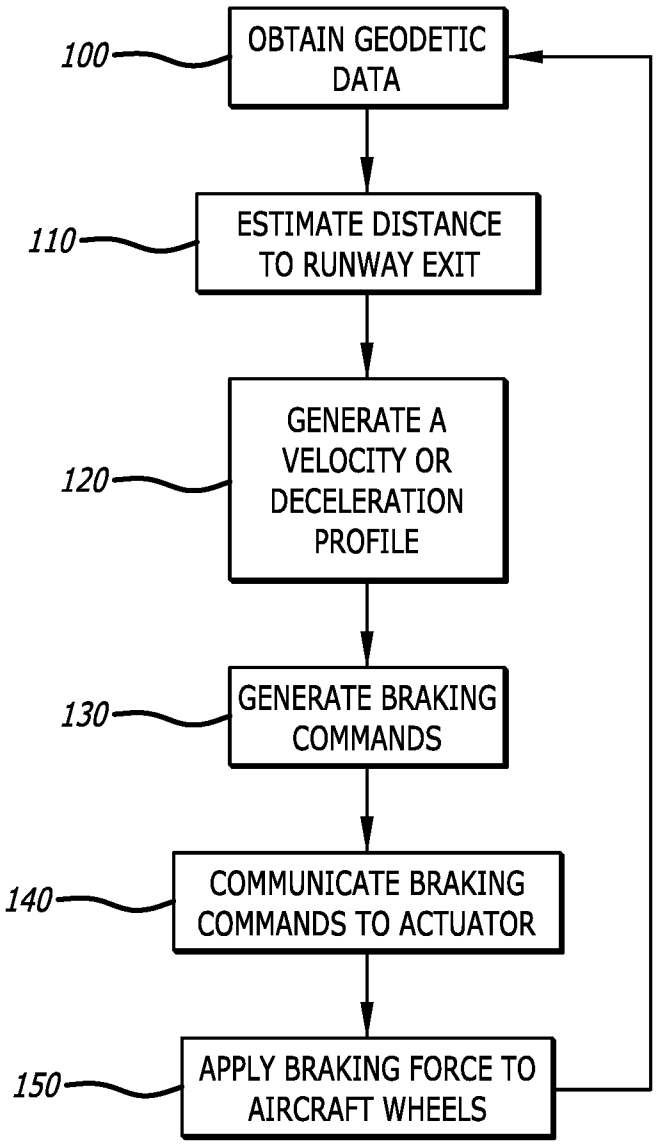
100
OBTAIN GEODETIC DATA
110
ESTIMATE DISTANCE TO RUNWAY EXIT
120
GENERATE A VELOCITY OR DECELERATION PROFILE
130
GENERATE BRAKING COMMANDS
140
COMMUNICATE BRAKING COMMANDS TO ACTUATOR
150
APPLY BRAKING FORCE TO AIRCRAFT WHEELS

FIG. 4

INTERNATIONAL SEARCH REPORT

International application No.
PCT/US 17/68417

A. CLASSIFICATION OF SUBJECT MATTER
IPC(8) - G06F 19/00 (2018.01)
CPC - B64C 25/426, G05D 1/0083, G01C 23/005, G08G 5/0086, G08G 5/025

According to International Patent Classification (IPC) or to both national classification and IPC

B. FIELDS SEARCHED

Minimum documentation searched (classification system followed by classification symbols)
See Search History Document

Documentation searched other than minimum documentation to the extent that such documents are included in the fields searched
See Search History Document

Electronic data base consulted during the international search (name of data base and, where practicable, search terms used)
See Search History Document

C. DOCUMENTS CONSIDERED TO BE RELEVANT

Category*	Citation of document, with indication, where appropriate, of the relevant passages	Relevant to claim No.
Y	US 2007/0208466 A1 (MEUNIER), 06 September 2007 (06.09.2007), entire document, especially Abstract; Fig. 2; Para [0032]-[0033], [0034], [0039]	1-23
Y	US 2007/0150126 A1 (CRANK), 28 June 2007 (28.06.2007), entire document, especially Abstract; Para [0083]-[0085]	1-23
Y	US 4,343,035 A (Tanner), 03 August 1982 (03.08.1982), entire document, especially Abstract; col 3, ln 35 to col 4, ln 65	3, 6, 10, 14, 18, 21
Y	US 2003/0036880 A1 (Phuyal et al.), 20 February 2003 (20.02.2003), entire document, especially Abstract; Para [0019]-[0023], [0027]	3, 6, 10, 14, 18, 21
A	US 2005/0261813 A1 (Ryan et al.), 24 November 2005 (24.11.2005), entire document	1-23
A	US 2014/0257601 A1 (Gulfstream Aerospace Corporation), 11 September 2014 (11.09.2014), entire document	1-23

☐ Further documents are listed in the continuation of Box C. ☐ See patent family annex.

* Special categories of cited documents:
"A" document defining the general state of the art which is not considered to be of particular relevance
"E" earlier application or patent but published on or after the international filing date
"L" document which may throw doubts on priority claim(s) or which is cited to establish the publication date of another citation or other special reason (as specified)
"O" document referring to an oral disclosure, use, exhibition or other means
"P" document published prior to the international filing date but later than the priority date claimed
"T" later document published after the international filing date or priority date and not in conflict with the application but cited to understand the principle or theory underlying the invention
"X" document of particular relevance; the claimed invention cannot be considered novel or cannot be considered to involve an inventive step when the document is taken alone
"Y" document of particular relevance; the claimed invention cannot be considered to involve an inventive step when the document is combined with one or more other such documents, such combination being obvious to a person skilled in the art
"&" document member of the same patent family

Date of the actual completion of the international search	Date of mailing of the international search report
02 March 2018	12 MAR 2018
Name and mailing address of the ISA/US Mail Stop PCT, Attn: ISA/US, Commissioner for Patents P.O. Box 1450, Alexandria, Virginia 22313-1450 Facsimile No. 571-273-8300	Authorized officer: Lee W. Young PCT Helpdesk: 571-272-4300 PCT OSP: 571-272-7774