(12) INTERNATIONAL APPLICATION PUBLISHED UNDER THE PATENT COOPERATION TREATY (PCT)

(19) World Intellectual Property Organization
International Bureau

(43) International Publication Date
12 July 2007 (12.07.2007)

PCT

(10) International Publication Number
WO 2007/077042 A1

(51) International Patent Classification:
C07K 14/54 (2006.01) *C07K 14/47* (2006.01)
C07K 16/24 (2006.01)

(21) International Application Number:
PCT/EP2006/050060

(22) International Filing Date: 6 January 2006 (06.01.2006)

(25) Filing Language: English

(26) Publication Language: English

(71) Applicant *(for all designated States except US)*: **APOXIS SA** [CH/CH]; 18-20 Avenue de Sévelin, CH-1004 Lausanne (CH).

(72) Inventors; and
(75) Inventors/Applicants *(for US only)*: **PETRILLI, Virginie** [FR/CH]; Rue Saint-Roch 40, CH-1004 Lausanne (CH). **MARTINON, Fabio** [IT/CH]; Valentin 30, CH-1004 Lausanne (CH). **TSCHOPP, Jurg** [CH/CH]; Chemin des Fontannins 10, CH-1066 Epalinges (CH). **DE SMEDT, Thibaut** [BE/CH]; 33 rue du Village, CH-1095 Lutry (CH).

(74) Agents: **CABINET REGIMBEAU - MARTIN, SCHRIMPF, WARCOIN, AHNER, TEXIER, LE FORESTIER, CALLON DE LAMARCK** et al.; 129 Rue Servient, F-69326 Lyon Cedex 03 (FR).

(81) Designated States *(unless otherwise indicated, for every kind of national protection available)*: AE, AG, AL, AM, AT, AU, AZ, BA, BB, BG, BR, BW, BY, BZ, CA, CH, CN, CO, CR, CU, CZ, DE, DK, DM, DZ, EC, EE, EG, ES, FI, GB, GD, GE, GH, GM, HR, HU, ID, IL, IN, IS, JP, KE, KG, KM, KN, KP, KR, KZ, LC, LK, LR, LS, LT, LU, LV, LY, MA, MD, MG, MK, MN, MW, MX, MZ, NA, NG, NI, NO, NZ, OM, PG, PH, PL, PT, RO, RU, SC, SD, SE, SG, SK, SL, SM, SY, TJ, TM, TN, TR, TT, TZ, UA, UG, US, UZ, VC, VN, YU, ZA, ZM, ZW.

(84) Designated States *(unless otherwise indicated, for every kind of regional protection available)*: ARIPO (BW, GH, GM, KE, LS, MW, MZ, NA, SD, SL, SZ, TZ, UG, ZM, ZW), Eurasian (AM, AZ, BY, KG, KZ, MD, RU, TJ, TM), European (AT, BE, BG, CH, CY, CZ, DE, DK, EE, ES, FI, FR, GB, GR, HU, IE, IS, IT, LT, LU, LV, MC, NL, PL, PT, RO, SE, SI, SK, TR), OAPI (BF, BJ, CF, CG, CI, CM, GA, GN, GQ, GW, ML, MR, NE, SN, TD, TG).

Declaration under Rule 4.17:
— *of inventorship (Rule 4.17(iv))*

Published:
— *with international search report*

For two-letter codes and other abbreviations, refer to the "Guidance Notes on Codes and Abbreviations" appearing at the beginning of each regular issue of the PCT Gazette.

WO 2007/077042 A1

(54) Title: NEW METHOD FOR THE TREATMENT OF GOUT OR PSEUDOGOUT

(57) Abstract: The present invention relates to a new method for the treatment of gout or pseudogout, comprising administering an effective amount of NALP3 inflammasome inhibiting agent.

New method for the treatment of gout or pseudogout

The present invention relates to a new method for the treatment of gout or pseudogout, comprising administering an effective amount of NALP3 inflammasome inhibiting agent.

Development of the acute and chronic inflammatory responses known as gout and pseudogout are associated with the deposition of monosodium urate (MSU) or calcium pyrophosphate dihydrate (CPPD) crystals, respectively, in joints and periarticular tissues. Although MSU crystals were first identified as the etiologic agent of gout in the 18th century[1] and more recently as a "danger signal" released from dying cells[2], little is known on the molecular mechanisms underlying MSU- or CPPD-induced inflammation.

Few therapies are available today for the treatment of gout or pseudogout, generally using colchicine and other. However, such treatments are not satisfactory. As an example, use of oral colchicine is limited by side effects such as nausea and abdominal pain. Information regarding usual gout treatments and side effects is given by Cannella & Mikuls (The American Journal of Managed Care, Nov. 2005, Vol. 11, NO. 15, SUP., S541-S458) and on the Web site http://www.arthritis.ca/types%20of%20arthritis/gout/default.asp?s=1.

The notion of autoinflammatory diseases delineates a heterogeneous group of pathologies characterized by spontaneous periodic inflammation and fever in the absence of infectious or autoimmune causes[3]. Hereditary periodic fevers (HPFs), systemic onset juvenile idiopathic arthritis (SoJIA), Still's disease, Behçet's disease, and the metabolic disorders gout and pseudogout are examples of such inflammatory maladies. Increased production of the inflammatory cytokine IL-1β was recently identified as the cause of several autoinflammatory diseases, providing clear evidence for a pivotal role of this cytokine in triggering autoinflammation[4-8]. IL-1β, also known as the endogenous pyrogen, is a highly inflammatory cytokine whose production is tightly controlled by at least three distinct steps[9].

The first step involves the production of the proIL-1β protein (p35), this is followed by the cleavage of the precursor proIL-1β to produce the active IL-1β protein (p17) and finally IL-1β is released intothe extracellular environment. The second step, processing of proIL-1β, involves the activation of a caspase-1 activating complex, the best characterized being the inflammasome[10, 11].

Upon activation, the inflammasome is formed by a member of the NALP protein family such as NALP1, NALP2 or NALP3/Cryopyrin, and the adaptor protein, ASC, that connects the NALPs with caspase-1[12]. Signals and mechanisms leading to inflammasome activation are still poorly understood. Muramyl dipeptide (MDP), a degradation product of the bacterial cell wall component peptidoglycans and contaminant of crude LPS, was recently shown to activate a NALP3 inflammasome[13] through NALP3's leucine rich repeats (LRR) domain, suggesting that NALPs like Toll-like receptors (TLRs) are fundamental for microbial detection[14].

However, the inflammasome is also proficient in sensing stress or endogenous "danger signals" such as extracellular ATP or hypotonic stress[10, 11, 15]. Recently, MSU crystals were identified as a "danger signal" formed following release of uric acid from dying cells [2].

Inventors have shown that MSU and CPPD engage the caspase-1 activating NALP3 inflammasome, resulting in the production of active IL-1β and IL-18.

Macrophages from mice deficient in various components of the inflammasome such as Caspase-1, ASC and NALP3 are defective in crystal induced IL-1β activation. Moreover, an impaired neutrophil influx is found in an *in vivo* model of crystal-induced peritonitis in inflammasome-deficient mice or mice deficient in the IL-1β receptor (IL-1R). These findings provide insight into the molecular processes underlying the inflammatory conditions of gout and pseudogout.

Thus, the present invention relates to a new method for the treatment of gout or pseudogout, comprising administering an effective amount of NALP3 inflammasome inhibiting agent.

NALP3 inflammasome inhibiting agents are composition of matters such as small molecules, DNA or RNA sequences, proteins, antibodies, which action inhibit formation of NALP3 inflammasome, and/or activity of the same NALP3 inflammasome, an/or activity of the product of NALP3 inflammasome.

NALP3 inflammasome is a conjugate of Caspase-1, ASC and NALP3. According to the invention, inhibitors of the formation of NALP3 inflammasome are inhibitors of expression and/or activity of Caspase1, and/or ASC and/or NALP3.

IL-1β is the major product of NALP3 inflammasome activation, involved in autoimmune diseases. According to the invention, inhibitors of activity of NALP3 inflammasome are inhibiting processing of proIL-1β into IL-1β by NALP3 inflammasome.

IL-1β being the main vector of inflammation in gout and pseudogout, inhibitors of activity of the product of NALP3 inflammasome are preferably inhibitors of the activity of IL-1β.

Interleukin-1 inhibitors are known in the art, such as inhibitors disclosed in WO 89/11540, or in many scientific articles, such as Nishihara & al (Infect Immun. 1988 November; 56(11): 2801–2807) or Peled & al (blood, Volume 79, Issue 5, pp. 1172-1177). Other interleukin antagonists are known in the art, such as small molecules disclosed in 6,417,202.

In a preferred embodiment, the inflammasome inhibiting agents is an IL-1 Receptor antagonist, natural or synthetic, particularly IL-1 Ra also known as anakinra, marketed under the name Kineret®.

In another preferred embodiment, NALP3 inflammasome inhibiting agents are selected among antibodies inhibiting activity of IL-1β. Such anti-IL-1β Abs are polyclonal or monoclonal antibodies, preferably monoclonal antibodies.

Such antibodies are known in the art, some being disclosed for their use in therapy for the treatment of other diseases such as rheumatoid arthritis and osteoarthritis (WO 03/073982). Same antibodies are available by ordering on the Internet such as antibodies sold by RayBIotech (http://www.raybiotech.com/antibodies.htm), abcam (http://www.abcam.com/?t=7588&pt=1&c=530).

Moreover, the person skilled in the art is able to identify and prepare new antibodies using standard technologies.

In preferred embodiments, antibodies are humanized antibody, i.e. an antibody that is composed partially or fully of amino acid sequences derived from a human antibody germline or a rearranged sequence and made by altering the sequence of an antibody having non-human complementarity determining regions (CDR).

The framework regions of the variable regions are substituted by corresponding human framework regions leaving the non-human CDR substantially intact. The framework region may be entirely human or may contain substitutions in regions that influence binding of the antibody to the target antigen. These regions may be substituted with the corresponding non-human amino acids.

Humanized antibodies have several potential advantages for use in human therapy more particularly regarding non recognition by the human immune system and a longer half-life in the circulation than non-human antibodies.

NALP3 inflammasome inhibiting agents are administered following standard procedures and using standard pharmaceutical compositions.

NALP3 inflammasome inhibiting agents are administered using standard administration techniques, preferably peripherally by injection or infusion, intravenous, intraperitoneal, intramuscular or subcutaneous, but also by other routes such as pulmonary, intranasal, buccal, sublingual, transdermal, oral, or suppository administration.

Pharmaceutical compositions for antibodies are known in the art and are designed to be appropriate for the selected mode of administration. Pharmaceutically acceptable carriers, excipients as well as buffers, surfactants, preservatives, solubilizing agents, stabilizing agents are used according to the known practice.

In preferred embodiments, preferred IL-1 Ra or anti-IL-1β antibodies are administered once a day, preferably once a week, even more preferably once a month in a dose sufficient to inhibit IL-1β activity.

The person skilled in the art, and more particularly the physician ordering treatment of gout or pseudogout is able to determine the said dose taking into consideration inter alia the development stage of the disease, the age, weight and general condition of the patient.

Recommended dose of anti-IL-1β antibody is comprised between 1 and 20 mg/kg, preferably between 2 and 10 mg/kg, more preferably from 3 to 5 mg/kg. Preferred route of administration is intravenous infusion.

Infusions can be given on specific administration programs determined by the physician. Such program may comprise additional infusions at 1 or 2 and 5 or 6 weeks after the first infusion, followed eventually by further infusions every 8 to 10 weeks thereafter.

The recommended dose of IL-1 Ra is comprised between 50 and 150 mg/day administered daily. Preferred route of administration is subcutaneous injection.

In the method according to the invention, NALP3 inflammasome inhibiting agents may be used combined with other therapeutic agents such as anti-inflammatory compounds or colchicines. Known anti-inflammatory compounds are selected among corticoids, such as prednisone, betamethasone, dexamethasone, methylprednisolone, prednisolone, cortivazol, hydrocortisone, triamcinolone, and non steroids such as indimetacine, sulindac, tiaprofenic acid, alminoprofene, diclofenac, etodolac, flurbiprofene, ibuprofene, ketoprofene, nabumetone, naproxene, meloxicam, piroxicam, tenoxicam, celecoxib, refecoxib and any other anti-inflammatory compound listed in the pharmacopea.

The present invention also relates to the use of a NALP3 inflammasome inhibiting agent for the premaration of a medicament used in the treatment of gout or pseudogout.

Other characteristics of the present invention are illustrated with the scientific report below.

Figure legends

Figure 1: Monosodium urate crystals (MSU) and Calcium pyrophosphate dihydrate (CPPD) activate IL-1β cleavage and release. a-c, THP1 cells were stimulated for 6 h with the indicated amounts/ml of MSU crystals (a), CPPD (b) or with 50 μg/ml of pure LPS, MSU, allopurinol crystals, CPPD crystals, diamond crystals, aluminum particles, zymosan, crude preparations of LPS, or 5 mM of extracellular ATP as indicated (c). Supernatants (SN) were analyzed for the presence of mature IL-1β, IL-18 or Caspase-1, and cell extracts (Cell) for the presence of proIL-1β and proIL-18. d, human monocytes were stimulated with 50 μg/ml of the indicated crystals for 6 h and analyzed by Western blot for IL-1β activation or by ELISA for released caspase-1 and IL-1β.

Figure 2: The NALP3-inflammasome is required for the maturation of IL-1β. Mouse macrophages from Wild-Type (+/+), Caspase-1 (Casp1) or MyD88 deficient mice (a), ASC deficient mice or littermate controls (b), and NALP3 deficient mice or littermate controls (c) were stimulated as indicated in the presence of ultra pure LPS (1μg/ml, Alexis or Invivogen) in order to induce the synthesis of precursor proIL-1β. In (c), ultra pure LPS was added 1 h before stimulation. Supernatant (SN) or cell extracts (Cell) were analyzed by Western blot as indicated.

Figure 3: IL-1β maturation is an early event following MSU and CPPD stimulation, and is blocked by colchicine. a, THP1 cells were stimulated with MSU, CPPD or Zymosan (Zym) for the indicated times in the presence or absence of the caspase-1 inhibitor zYVAD-fmk. Supernatants were analyzed for TNF-A (gray bars) and IL-1β (black bars) production by ELISA. b, human monocytes were incubated with MSU or CPPD in the presence of two concentrations of IL-1ra. TNF-A and IL-6 production was monitored by ELISA. c, THP1 cells were stimulated with MSU, CPPD or ATP in the presence or absence of colchicine (colch). Maturation of IL-1β was analyzed by Western Blot.

Figure 4: Role of the inflammasome in a mouse model of crystal-mediated peritonitis. (a-d) The indicated wild-type or mutant mice received 0.5 ml i.p. of sterile PBS alone or supplemented with 1 mg of the indicated crystals or 0.2 mg of Zymosan.

Neutrophil influx was quantified 6 h later (values are ± S.E.M of n = 4 to 6 mice per group. Unpaired Student's *t*-Test was used to calculate p value.

Figure 5: gene targeting strategy for disruption of the mouse *NALP3* gene. a, an EGFP cassette was inserted in frame with the ATG of exon 2. The EGFP cassette is followed by the SV40 poly(A) tail, resulting in the disruption of the *NALP3* gene. A selection cassette PGK-neo flanked by 2 loxP sites was inserted in the intron 2. The neo cassette was deleted by backcrossing the mice with a Cre-expressing deletor strain (C57BL/6). b, PCR Genotyping of ko, wt and heterozygote mice.

Figure 6: Monosodium urate crystals (MSU)-mediated activation of IL-1β occurs independently of the ATP-receptor $P2X_7$. THP1 cells were pre-treated with the P2X antagonist pyridoxal-phosphate-6-azophenyl-2',4'-disulfonic acid (PPADS, Alexis) for 30 min and subsequently stimulated for 6 h with MSU crystals (50μg/ml). Supernatants (SN) were analyzed for the presence of mature IL-1β and cell extracts (Cell) for the presence of proIL-1β.

Cells from the differentiated monocytic cell line THP1 were therefore incubated with MSU crystals. Maturation of IL-1β was indeed detected following stimulation with as little as 10 μg/ml of the crystals (Fig. 1a). The caspase-1 dependency of the proIL-1β cleavage was confirmed by the addition of the caspase-1 inhibitor zYVAD-fmk that completely blocked MSU-induced IL-1β activation (Fig. 1a). CPPD, another type of pathogenic crystal involved in calcium pyrophosphate deposition disease, also known as pseudogout, was as active as MSU (Fig. 1b). Crystal-induced IL-1β processing was specific for pathogenic agents, as the non-inflammatory allopurinol or diamond crystals and particulate elements such as zymosan and aluminum powder failed to induce proIL-1β processing (Fig. 1c), despite their similar size and/or chemical composition. Compared to the known activators of the inflammasome, crude LPS and ATP, MSU and CPPD were more active[11, 13] (Fig. 1c). This superior potency was particularly evident when analyzing processing of proIL-18, the second known substrate of caspase-1 (Fig. 1c). Previously, we demonstrated that the inflammatory caspases are cleaved and released along with active IL-1β following activation of the inflammasome[13]. This was also observed when cells were treated with MSU and CPPD (Fig. 1c, d). In order to exclude that crystal-mediated activation of caspase-1 is a unique property of the THP1 cell line only, MSU and CPPD

were added to purified human monocytes. As shown in Figure 1d, a strong response to both pathogenic crystals was also elicited in primary cells.

In order to provide direct evidence for the involvement of the inflammasome in crystal-induced inflammation, we analyzed peritoneal macrophages (PMΦs) derived from mice deficient in various key proteins of the inflammasome complex or other proinflammatory pathways. Given the absence and/or rapid degradation of proIL-1β in PMΦs *ex vivo*, and since we failed to see any direct induction of the transcription or translation of proIL-1β by MSU or CPPD, we stimulated the TLR4 in PMΦs with highly pure LPS to induce the synthesis of the cytokine[11, 13]. Consistent with our previous findings in human monocytes, mouse PMΦs stimulated with MSU or CPPD activated caspase-1 and secreted mature IL-1β (Fig. 2a). Maturation was abolished in PMΦs from caspase-1 deficient mice, confirming the specificity of the activation. As expected, MyD88 deficient PMΦs did not produce mature IL-1β due to their defective TLR signaling, resulting in a failure to produce proIL-1β following LPS prestimulation (Fig. 2a). Nevertheless, MyD88-/- PMΦs still activated caspase-1 (Fig. 2a) further suggesting that this activation is TLR independent and is consistent with a possible involvement of the inflammasome[13, 15]. ASC is a crucial adaptor protein required for the recruitment of caspase-1 to the NALP platform of inflammasomes[12]. ASC deficient PMΦs did not produce any mature IL-1β following stimulation by MSU and CPPD crystals (Fig. 2b).

The human genome harbors a repertoire of fourteen NALPs. It is currently not clear how many of them form inflammasomes. NALP3 is expressed in both monocytes and macrophages and is well conserved in human and mouse. Its ability to form an inflammasome and to drive inflammation in human is well supported by its implication in many hereditary autoinflammatory syndromes[4]. We considered that the NALP3 inflammasome was possibly implicated in crystal-induced caspase-1 activation and we therefore generated NALP3 deficient mice (Fig.5 and manuscript in preparation). Similar to PMΦs from ASC-/- mice, IL-1β release was impaired in NALP3-deficient PMΦs upon MSU and CPPD exposure (Fig. 2c). IL-1β induction by ATP, the other known non-microbial stimulus of inflammasomes was also dependent on NALP3 (Fig. 2c). While blocking of the ATP-receptor $P2X_7$ inhibited ATP-driven inflammasome activation, it had no effect on MSU-induced activation, indicating that the two inflammasome-activating pathways act independently (Fig. 6).

In addition to cytokines whose activity is dependent on caspase-1 activation, MSU and CPPD are known to induce other cytokines such as TNF-α[17, 18], suggesting additional, inflammasome-independent activities of the crystals. When assaying the release of TNF-α, we realized that the production of TNF-α was relatively slow and was preceded by the release of IL-1β[19] (Fig. 3a). It was therefore possible that TNF-α secretion was initiated, at least in part, by the released mature IL-1β. Indeed, blocking the maturation of IL-1β with zYVAD-fmk considerably reduced the production of TNF-α induced by MSU and CPPD, without affecting TNF-α production by the TLR2 agonist Zymosan (Fig. 3a). Similarly IL-1ra, a natural inhibitor of IL-1 signaling, significantly affected TNF-α and IL-6 production by human monocytes (Fig. 3b). These results suggest that the processing of IL-1β is a proximal event in the inflammatory cascade initiated by pathogenic crystals, possibly explaining the extraordinary success of IL-1ra in the treatment of some autoinflammatory diseases [20, 21].

Colchicine is another drug that is frequently used for the treatment of autoinflammatory diseases, including Familial Mediterranean Fever (FMF), acute gout and pseudogout episodes[22]. Pretreatment with intravenous colchicine prior to intraarticular MSU injections greatly reduces inflammation[23] suggesting that colchicine targets the initial phase of inflammation. We therefore investigated the role of colchicine in crystal-induced maturation of IL-1β. As shown in Figure 3c, pretreatment with colchicine, but not its solvent ethanol, completely blocked the processing of IL-1β. In contrast, colchicine did not affect IL-1β activation by extracellular ATP, indicating that the drug acts upstream of inflammasome activation. Taken together, the above results indicate that crystals are pro-inflammatory by virtue of their capacity to activate the NALP3-inflammasome.

Clinically, gout and pseudogout are associated with edema and erythema of the joints, with consequent severe pain, conditions that are associated with strong infiltration of neutrophils in the intraarticular and periarticular spaces. This marked neutrophil influx can be reproduced experimentally in mice by i.p. injection of crystals[24]. We used this well established model to investigate the *in vivo* role of the inflammasome in crystal-induced inflammation. MSU, CPPD or allopurinol crystals were injected and the peritoneal recruitment of neutrophils was analyzed 6 h later. Both MSU and CPPD elicited a considerable increase in the recruitment of neutrophils compared with PBS or allopurinol when injected in wild-type C57BL/6 mice (Fig. 4a). Although neutrophil influx was

slightly increased in BALB/c mice, both BALB/c and C57BL/6 strains adequately reproduced crystal-induced inflammation (Fig. 4 and data not shown). Importantly, when pathogenic crystals were injected in mice deficient in caspase-1 or ASC, neutrophil influx was markedly impaired (Fig. 4b and c), indicating a pivotal role of the inflammasome and IL-1β in this process. In agreement with this notion was the observation that IL-1R deficient mice exhibited a similarly reduced recruitment of neutrophils following MSU and CPPD (Fig. 4d). In contrast, zymosan-induced neutrophil influx was not affected in ASC or IL-1R deficiency.

Gout and pseudogout are two common causes of inflammatory joint diseases. Despite differences underlying their pathogenesis, their clinical presentation and treatment share many common features. Based on our findings that pathogenic crystal-mediated IL-1β maturation requires the inflammasome components NALP3, ASC and caspase-1, we propose that both etiologic agents of gout and pseudogout, MSU and CPPD, mediate inflammation in an inflammasome-dependent manner. This notion is further supported by clinical data demonstrating that colchicine, a drug able to resolve the initial inflammatory phase of both gout and pseudogout, blocks IL-1β maturation by MSU and CPPD. Combining colchicine's known mode of action as an inhibitor of microtubule assembly with the observation that colchicine blocks crystal-induced IL-1β generation upstream of inflammasome activation (Fig. 3c), it is likely that the drug acts at the level of crystal endocytosis and/or presentation to the inflammasome [25]. Interestingly, MSU uptake also proposed to be partly dependent on the presence of TLR2 and TLR4[26]. The mechanism whereby endocytosed MSU and CPPD are sensed by the NALP3-inflammasome is currently not known, nor is it clear whether the crystals directly interact with NALP3 or whether sensing occurs via intermediary protein(s). Since inflammasome activating MSU crystals and inflammasome neutral allopurinol are chemically and structurally similar and, additionally, are both internalized, inflammasomes must have the astounding capacity to distinguish between subtle differences in crystal surface charge or form.

Microbial components (Pathogen-associated molecular patterns, PAMPs) provide signals that alert our immune system to danger and promote the innate generation of immunity[27]. However, PAMPs (non-self) are not the only triggers of innate immunity. Innate immunity is able to recognize abnormal self, or danger signals, such as uric acid released by injured cells[2, 28]. How these "danger signals" are recognized by cells is mostly

unknown, but based on our results inflammasomes likely constitute some of the long-sought proximal sensors for "stress" or "danger signals" skilled to initiate inflammation.

In addition to gouty inflammation, the NALP3-inflammasome is also implicated in other autoinflammatory diseases. Specific gain of function mutations in the NALP3 protein leads to three related familial autoinflammatory diseases, Muckle-Wells syndrome (MWS), familial cold autoinflammatory syndrome (FCAS) and chronic infantile neurologic cutaneous and articular syndrome (CINCA)[4, 29]. In these patients, mutations in NALP3 lead to a constitutive processing of IL-1β[30]. In the case of gout and pseudogout, aberrant NALP3 inflammasome activation is not genetic, but mediated by local deposition of crystals. Importantly, inflammation in hereditary periodic fevers patients with mutations in NALP3 can be dramatically improved by treatments designated to block IL-1β [20, 21]. Due to the similarity between NALP3-mediated hereditary periodic fevers and gout and pseudogout, we can anticipate that similar treatments could benefit gout and pseudogout patients. It is also reasonable to foresee that further identification of additional inflammasome activating endogenous "danger signals" will probably shed some light in the molecular etiology of other autoinflammatory diseases such as systemic onset juvenile idiopathic arthritis (SoJIA) and Behçet's disease that share similarity with hereditary periodic fevers, gout or pseudogout.

METHODS

Crystal preparation.

MSU crystals were prepared as described[31]. Briefly 1.68 gm of uric acid in 0.01 M NaOH was heated to 70°C. NaOH was added as required to maintain pH between 7.1 and 7.2 and the solution was filtered and incubated at RT with little stirring slowly and continuously 24 h. CPPD was obtained by mixing a calcium nitrate solution (0.1 M final concentration) with an acidic solution of sodium pyrophosphate (final concentration, 25mM of $Na_2P_2O_7$ and 30mM HNO_3). The milky-white precipitate formed CPPD crystals following filtration and 24h incubation at 50 to 60°C[32]. Allopurinol crystals were generated as described before[33]. Diamond crystals (1-3 microns) were kindly provided by microdiamant AG, Lengwil (Switzerland). All the crystals were kept sterile, washed with ethanol, dried, autoclaved, re-suspended in PBS by sonication and were examined under phase and polarizing microscopy.

Primary human monocyte and THP1 preparation and stimulation.

THP1 were stimulated for 3 h with 0.5 μM of PMA the day before stimulation as described[34]. This treatment increases the phagocytic properties of the cells and induces a constitutive production of proIL-1β[35]. Human monocytes were purified as described before[36]. All cells were stimulated in OptiMEM medium as indicated. Human mature IL-1β was detected with a specific antibody directed against the cleaved epitope (D116) from Cell Signalling, or with an Enzyme–linked immunoabsorbent assay (ELISA) from BD bioscience. TNF and IL-6 were detected by an ELISA from ImmunoTools and caspase-1 by an ELISA from Alexis. IL-18 was detected with an antibody from MBL (D044-3) and Caspase-1 with an antibody from Santa Cruz Biotechnology (sc-622). The antibody against human IL-1β was a gift from Roberto Solari, Glaxo. z-YVAD-fmk was purchased from Alexis Biochemicals. IL-1ra was gift of Prof. Alex So, Lausanne.

Mice

NALP3 targeting vector (Figure 5) was electroporated into C57BL/6 ES cells (Ozgene). Homologous recombinant ES cells were identified by Southern blot analysis, and microinjected into C57BL/6 blastocysts. Offsprings were backcrossed to C57BL/6 mice and germline transmission was confirmed by PCR of tail genomic DNA (Figure 5b). Screening of NALP3 deficient mice by PCR genotyping was carried out using the following primers on tail genomic DNA: 5'GCTCAGGACATACGTCTGGA (forward in intron 1), 5'TGAGGTCCACATCTTCAAGG (reverse in exon2) and 5'TTGTAGTTGCCGTCGTCCTT (reverse in EGFP cassette). RT-PCR analysis of cDNA isolated from NALP3+/+ and NALP3-/- macrophages confirmed the absence of NALP3. ASC deficient mice were a generous gift of Vishva Dixit (Genentech, San Francisco) and were described previously[37]. Caspase-1-deficient mice (C57BL/6) were a kind gift of Richard Flavell (Yale University, School of Medecine), MyD88-deficient mice (C57BL/6) were obtained from Shizuo Akira (Research Institute of Microbial Diseases, Osaka University), IL-1R (BALB/c)-deficient mice were obtained from Manfred Kopf (ETH, Zürich). Procedures used in this study complied with federal guidelines.

Mouse macrophage preparation.

Eight to twelve week-old mice of indicated genotypes were injected i.p. with 4% thioglycollate solution, and macrophages were collected by peritoneal lavage 3 days later. Cells were plated at the density of $7x10^5$ cells in twelve-well dishes and non-adherent cells were removed after 3 h. Cells were cultured in RPMI complemented with 10% FCS,

sodium pyruvate, penicillin/streptomycin and L-glutamin. All cells were stimulated in OptiMEM medium as described above. Caspase-1 was analyzed using an antibody from Santa Cruz Biotechnology (sc-514) and ASC using an antibody as described previously [34]. The antibody against mouse IL-1β was a gift from Roberto Solari, Glaxo. The following mouse ELISA kits were used: R&D systems for TNF and IL-1β, and BD biosciences for IL-6.

In vivo mouse peritonitis model.

Peritonitis was induced by injection of 1 mg of crystals or 0.2 mg of zymosan in 0.5 ml sterile PBS. After 6 h, mice were euthanized by CO_2 exposure and peritoneal cavities were washed with 10 ml of PBS. The lavage fluids were analysed for PMN recruitment by FACS using the neutrophil marker Ly-6G (1A8, BD biosciences).

References

1. Wollaston, H. W. On Gouty and Urinary Concretions. Phil. Trans. 87, 386-400 (1797).
2. Shi, Y., Evans, J. E. & Rock, K. L. Molecular identification of a danger signal that alerts the immune system to dying cells. Nature 425, 516-21 (2003).
3. Galon, J., Aksentijevich, I., McDermott, M. F., O'Shea, J. J. & Kastner, D. L. TNF-α RSF1A mutations and autoinflammatory syndromes. Curr Opin Immunol 12, 479-86 (2000).
4. Martinon, F. & Tschopp, J. Inflammatory caspases: linking an intracellular innate immune system to autoinflammatory diseases. Cell 117, 561-74 (2004).
5. Stojanov, S. & Kastner, D. L. Familial autoinflammatory diseases: genetics, pathogenesis and treatment. Curr Opin Rheumatol 17, 586-99 (2005).
6. Dinarello, C. A. Blocking IL-1 in systemic inflammation. J Exp Med 201, 1355-9 (2005).
7. Shoham, N. G. et al. Pyrin binds the PSTPIP1/CD2BP1 protein, defining familial Mediterranean fever and PAPA syndrome as disorders in the same pathway. Proc Natl Acad Sci U S A 100, 13501-6 (2003).
8. Chae, J. J. et al. Targeted disruption of pyrin, the FMF protein, causes heightened sensitivity to endotoxin and a defect in macrophage apoptosis. Mol Cell 11, 591-604 (2003).
9. Burns, K., Martinon, F. & Tschopp, J. New insights into the mechanism of IL-1beta maturation. Curr Opin Immunol 15, 26-30 (2003).
10. Martinon, F., Burns, K. & Tschopp, J. The inflammasome: a molecular platform triggering activation of inflammatory caspases and processing of proIL-beta. Mol Cell 10, 417-26. (2002).
11. Mariathasan, S. et al. Differential activation of the inflammasome by caspase-1 adaptors ASC and Ipaf. Nature 430, 213-8 (2004).
12. Tschopp, J., Martinon, F. & Burns, K. NALPs: a novel protein family involved in inflammation. Nat Rev Mol Cell Biol 4, 95-104 (2003).
13. Martinon, F., Agostini, L., Meylan, E. & Tschopp, J. Identification of bacterial muramyl dipeptide as activator of the NALP3/cryopyrin inflammasome. Curr Biol 14, 1929-34 (2004).

14. Martinon, F. & Tschopp, J. NLRs join TLRs as innate sensors of pathogens. Trends Immunol (2005).

15. Yamamoto, M. et al. ASC is essential for LPS-induced activation of procaspase-1 independently of TLR-associated signal adaptor molecules. Genes Cells 9, 1055-67 (2004).

16. Faires, J. S. & McCarty, D. J. Acute Arthritis in Man and Dog after Intrasynovial Infection of Sodium Urate Crystals. Lancet 280, 682-685 (1962).

17. Dalbeth, N. & Haskard, D. O. Mechanisms of inflammation in gout. Rheumatology (Oxford) 44, 1090-6 (2005).

18. Meng, Z. H., Hudson, A. P., Schumacher, H. R., Jr., Baker, J. F. & Baker, D. G. Monosodium urate, hydroxyapatite, and calcium pyrophosphate crystals induce tumor necrosis factor-alpha expression in a mononuclear cell line. J Rheumatol 24, 2385-8 (1997).

19. Chapman, P. T. et al. Endothelial activation in monosodium urate monohydrate crystal-induced inflammation: in vitro and in vivo studies on the roles of tumor necrosis factor alpha and interleukin-1. Arthritis Rheum 40, 955-65 (1997).

20. Hoffman, H. M. et al. Prevention of cold-associated acute inflammation in familial cold autoinflammatory syndrome by interleukin-1 receptor antagonist. Lancet 364, 1779-85 (2004).

21. Hawkins, P. N., Lachmann, H. J. & McDermott, M. F. Interleukin-1-receptor antagonist in the Muckle-Wells syndrome. N Engl J Med 348, 2583-4 (2003).

22. Molad, Y. Update on colchicine and its mechanism of action. Curr Rheumatol Rep 4, 252-6 (2002).

23. Malawista, S. E. & Seegmiller, J. E. The Effect of Pretreatment with Colchicine on the Inflammatory Response to Microcrystalline Urate: A Model for Gouty Inflammation. Ann Intern Med 62, 648-57 (1965).

24. Getting, S. J. et al. Molecular determinants of monosodium urate crystal-induced murine peritonitis: a role for endogenous mast cells and a distinct requirement for endothelial-derived selectins. J Pharmacol Exp Ther 283, 123-30 (1997).

25. Goldfinger, S. E., Howell, R. R. & Seegmiller, J. E. Suppression of metabolic accompaniments of phagocytosis by colchicine. Arthritis Rheum 8, 1112-22 (1965).

26. Liu-Bryan, R., Scott, P., Sydlaske, A., Rose, D. M. & Terkeltaub, R. Innate immunity conferred by Toll-like receptors 2 and 4 and myeloid differentiation factor 88 expression is pivotal to monosodium urate monohydrate crystal-induced inflammation. Arthritis Rheum 52, 2936-46 (2005).

27. Janeway, C. A., Jr. & Medzhitov, R. Innate immune recognition. Annu Rev Immunol 20, 197-216 (2002).

28. Matzinger, P. The danger model: a renewed sense of self. Science 296, 301-5. (2002).

29. Hoffman, H. M., Mueller, J. L., Broide, D. H., Wanderer, A. A. & Kolodner, R. D. Mutation of a new gene encoding a putative pyrin-like protein causes familial cold autoinflammatory syndrome and Muckle-Wells syndrome. Nat Genet 29, 301-5. (2001).

30. Agostini, L. et al. NALP3 forms an IL-1beta-processing inflammasome with increased activity in Muckle-Wells autoinflammatory disorder. Immunity 20, 319-25 (2004).

31. Schiltz, C. et al. Monosodium urate monohydrate crystal-induced inflammation in vivo: quantitative histomorphometric analysis of cellular events. Arthritis Rheum 46, 1643-50 (2002).

32. Pouliot, M., James, M. J., McColl, S. R., Naccache, P. H. & Cleland, L. G. Monosodium urate microcrystals induce cyclooxygenase-2 in human monocytes. Blood 91, 1769-76 (1998).

33. Shi, Y., Evans, J. E. & Rock, K. L. Molecular identification of a danger signal that alerts the immune system to dying cells. Nature 425, 516-21 (2003).

34. Martinon, F., Burns, K. & Tschopp, J. The inflammasome: a molecular platform triggering activation of inflammatory caspases and processing of proIL-beta. Mol Cell 10, 417-26. (2002).

35. Tsuchiya, S. et al. Induction of maturation in cultured human monocytic leukemia cells by a phorbol diester. Cancer Res 42, 1530-6. (1982).

36. Agostini, L. et al. NALP3 forms an IL-1beta-processing inflammasome with increased activity in Muckle-Wells autoinflammatory disorder. Immunity 20, 319-25 (2004).

37. Mariathasan, S. et al. Differential activation of the inflammasome by caspase-1 adaptors ASC and Ipaf. Nature 430, 213-8 (2004).

Claims

1. Method for the treatment of gout or pseudogout, comprising administering an effective amount of NALP3 inflammasome inhibiting agent.

2. The method of claim 1, wherein the NALP3 inflammasome inhibiting agent is selected among the group soncisting of inhibitors of NALP3 inflammasome formation, inhibitors of NALP3 inflammasome activity, and inhibitors of activity of the product of NALP3 inflammasome.

3. The method of claim 2, wherein the inhibitor of activity of the product of NALP3 inflammasome is selected among inhibitors of the activity of IL-1β.

4. The method of one of claims 1 to 3, wherein the NALP3 inflammasome inhibiting agent is selected among antibodies inhibiting activity of IL-1β.

5. The method of claim 4, wherein the anti-IL-1β antibody is a monoclonal antibody.

6. The method of one of claims 1 to 3, wherein the NALP3 inflammasome inhibiting agent is an IL-1 Receptor antagonist, natural or synthetic.

7. The method of claim 6, wherein the IL-1 Ra is anakinra.

8. The method of one of claims 1 to 7, wherein the NALP3 inflammasome inhibiting agent is administered once a day, preferably once a week, even more preferably once a month in a dose sufficient to inhibit IL-1β activity.

9. The method of one of claims 1 to 8, wherein the NALP3 inflammasome inhibiting agent is used combined with other therapeutic agents such as anti-inflammatory compounds or colchicines

10. Use of a NALP3 inflammasome inhibiting agent as defined in one of claims 2 to 7, for the preparation of a medicament used in the treatment of gout or pseudogout.

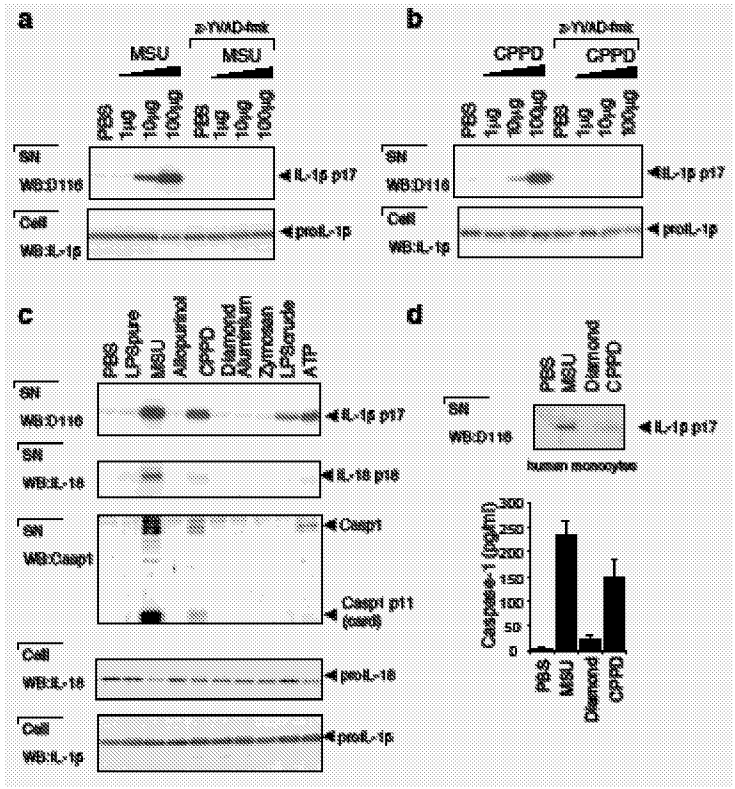
a
MSU
z-YVAD-fmk
MSU
PBS
1 µg
10 µg
100 µg
SN
WB:D116
IL-1β p17
Cell
WB:IL-1β
proIL-1β
b
CPPD
z-YVAD-fmk
CPPD
c
PBS
LPSpure
MSU
Alopurinol
CPPD
Diamond
Aluminium
Zymosan
LPScrude
ATP
WB:IL-18
IL-18 p18
WB:Casp1
Casp1
Casp1 p11 (cent)
proIL-18
d
PBS
MSU
Diamond
CPPD
human monocytes
Caspase-1 (pg/ml)
300
250
200
150
100
50
0

Fig 1

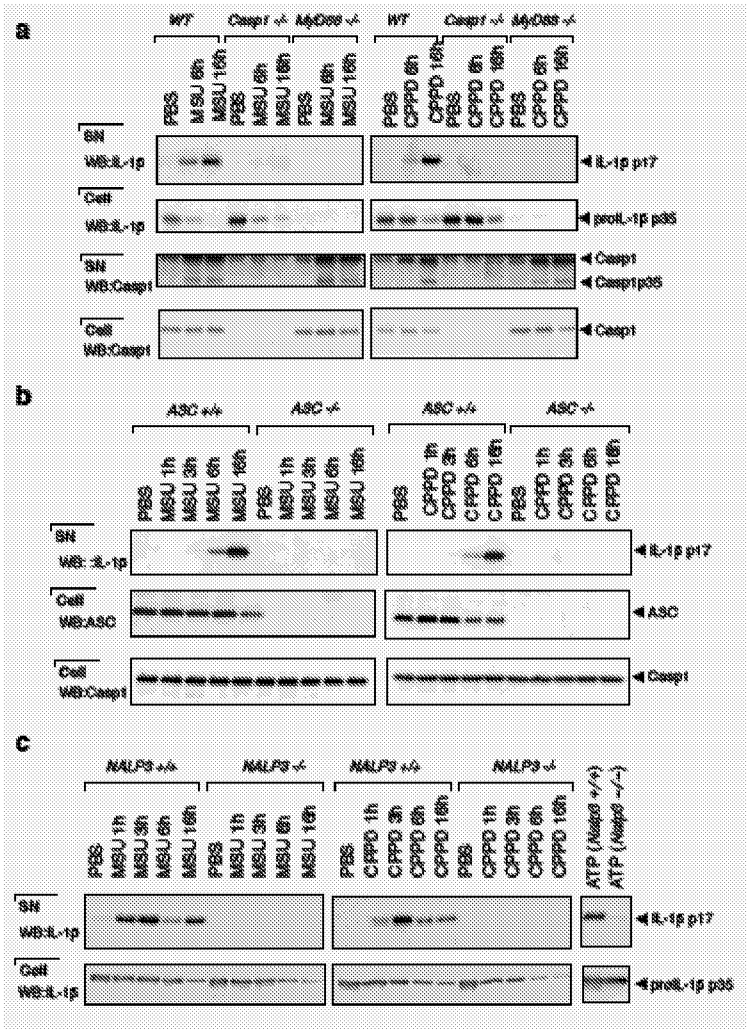
a
WT
Casp1 -/-
MyD88 -/-
WT
Casp1 -/-
MyD88 -/-
PBS
MSU 6h
MSU 16h
PBS
MSU 6h
MSU 16h
PBS
MSU 6h
MSU 16h
PBS
CPPD 6h
CPPD 16h
PBS
CPPD 6h
CPPD 16h
PBS
CPPD 6h
CPPD 16h
SN
WB:IL-1p
Cell
WB:IL-1p
SN
WB:Casp1
Cell
WB:Casp1
IL-1p p17
proIL-1p p35
Casp1
Casp1p35
Casp1
b
ASC +/+
ASC -/-
ASC +/+
ASC -/-
PBS
MSU 1h
MSU 3h
MSU 6h
MSU 16h
PBS
MSU 1h
MSU 3h
MSU 6h
MSU 16h
PBS
CPPD 1h
CPPD 3h
CPPD 6h
CPPD 16h
PBS
CPPD 1h
CPPD 3h
CPPD 6h
CPPD 16h
SN
WB: IL-1p
Cell
WB:ASC
Cell
WB:Casp1
IL-1p p17
ASC
Casp1
c
NALP3 +/+
NALP3 -/-
NALP3 +/+
NALP3 -/-
PBS
MSU 1h
MSU 3h
MSU 6h
MSU 16h
PBS
MSU 1h
MSU 3h
MSU 6h
MSU 16h
PBS
CPPD 1h
CPPD 3h
CPPD 6h
CPPD 16h
PBS
CPPD 1h
CPPD 3h
CPPD 6h
CPPD 16h
ATP (Nalp3 +/+)
ATP (Nalp3 -/-)
SN
WB:IL-1p
Cell
WB:IL-1p
IL-1p p17
proIL-1p p35

Fig 2

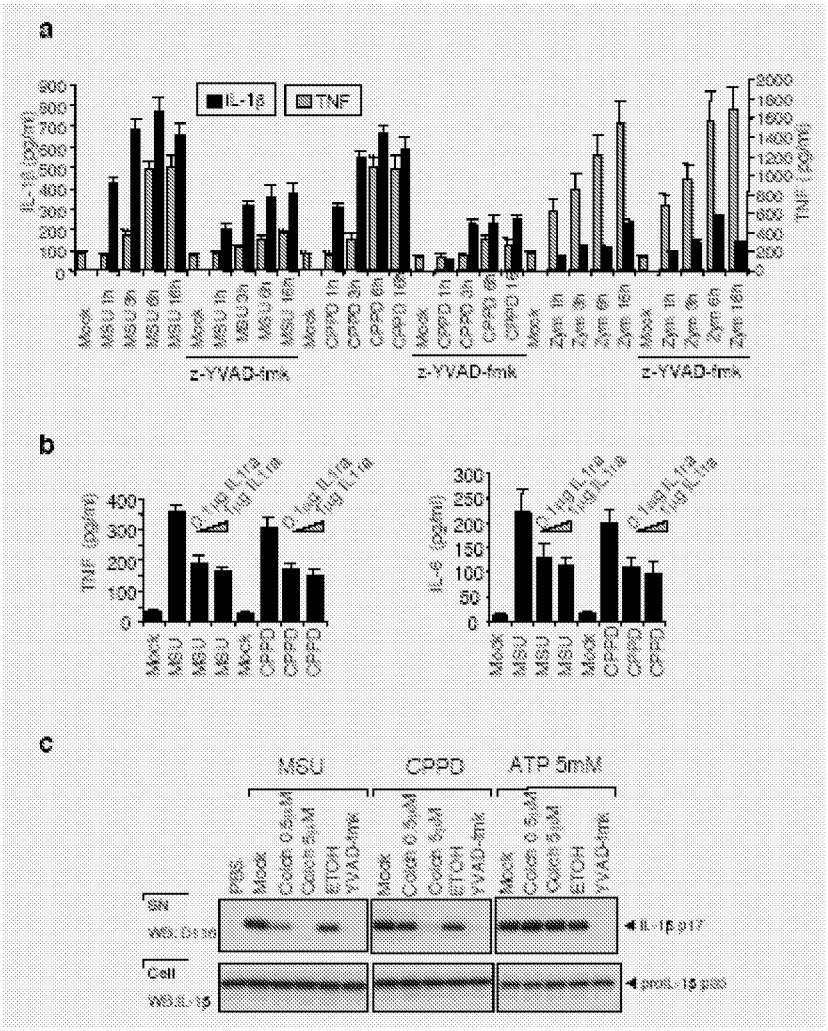
a
IL-1β
TNF
IL-1β (pg/ml)
TNF (pg/ml)
Mock
MSU 1h
MSU 3h
MSU 6h
MSU 16h
CPPD 1h
CPPD 3h
CPPD 6h
CPPD 16h
Zym 1h
Zym 3h
Zym 6h
Zym 16h
z-YVAD-fmk
b
TNF (pg/ml)
IL-6 (pg/ml)
0,1µg IL-1β
1µg IL-1β
MSU
CPPD
c
MSU
CPPD
ATP 5mM
PBS
Mock
Colch 0,5µM
Colch 5µM
ETOH
YVAD-fmk
SN
WB:IL-1β
Cell
WB:IL-1β
IL-1β p17
proIL-1β p33

Fig 3

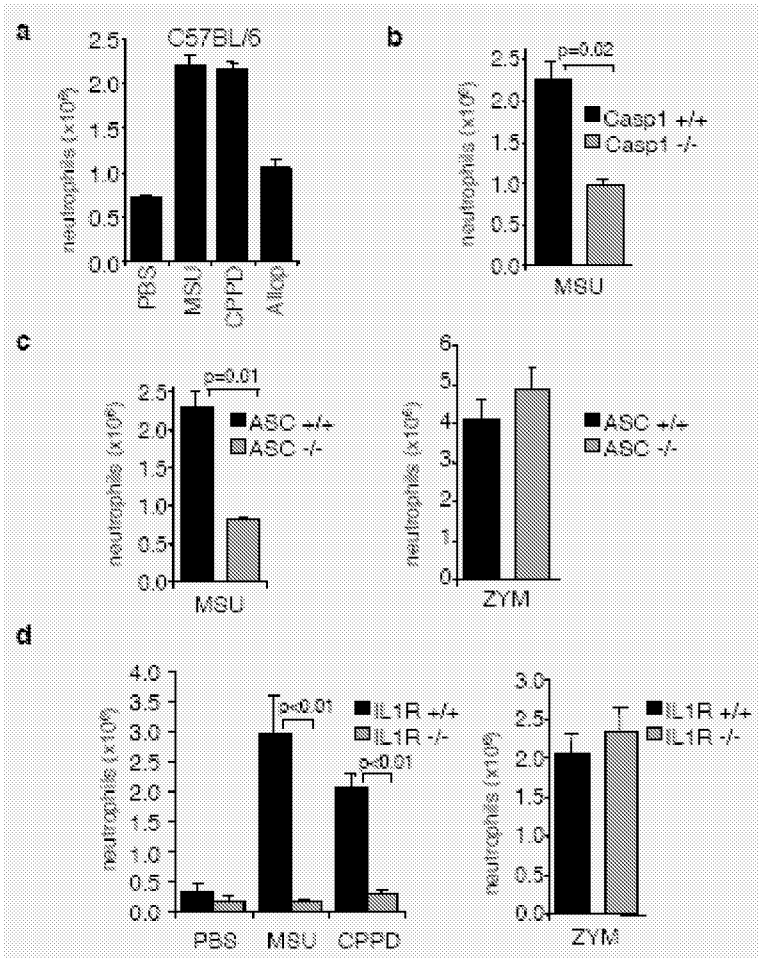
a
C57BL/6
neutrophils (x10⁶)
2.5
2.0
1.5
1.0
0.5
0.0
PBS
MSU
CPPD
Alum
b
p=0.02
Casp1 +/+
Casp1 -/-
MSU
c
p=0.01
ASC +/+
ASC -/-
MSU
ZYM
d
p<0.01
IL1R +/+
IL1R -/-
PBS
MSU
CPPD
ZYM

Fig 4

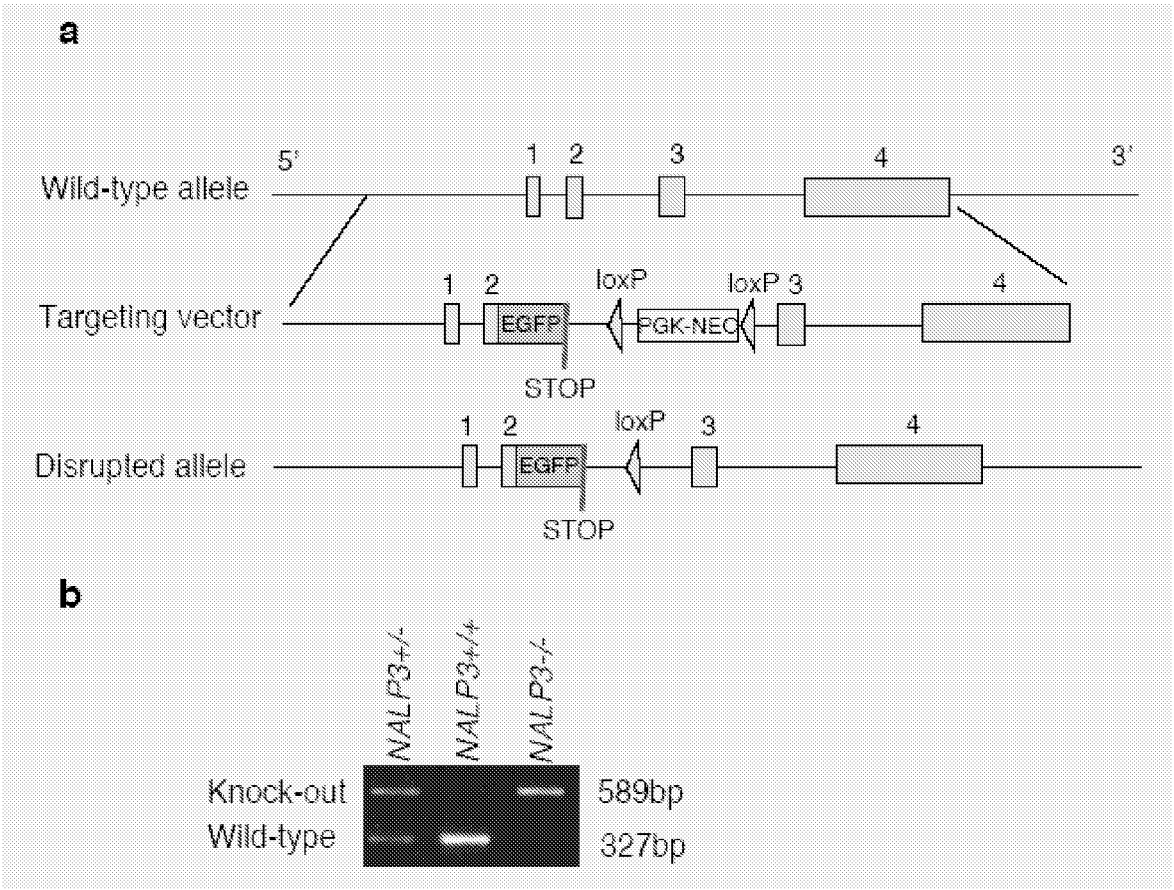
a
Wild-type allele
5'
1
2
3
4
3'
Targeting vector
1
2
EGFP
loxP
PGK-NEO
loxP
3
4
STOP
Disrupted allele
1
2
EGFP
loxP
3
4
STOP
b
NALP3+/-
NALP3+/+
NALP3-/-
Knock-out
Wild-type
589bp
327bp

Fig 5

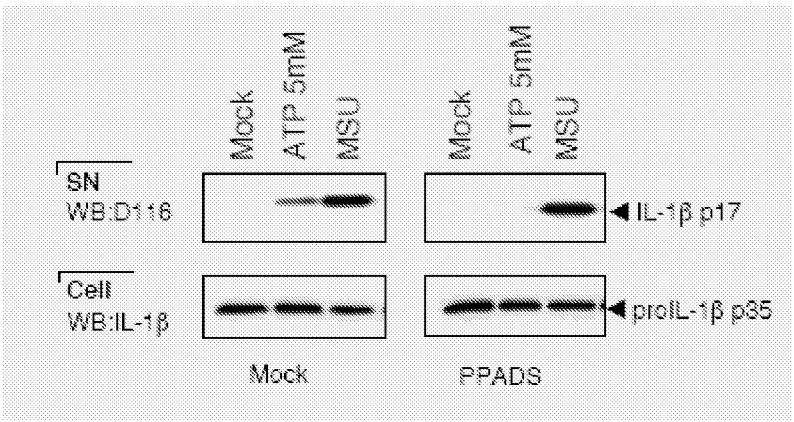
Mock
ATP 5mM
MSU
Mock
ATP 5mM
MSU
SN
WB:D116
IL-1β p17
Cell
WB:IL-1β
proIL-1β p35
Mock
PPADS

Fig 6

INTERNATIONAL SEARCH REPORT

International application No
PCT/EP2006/050060

A. CLASSIFICATION OF SUBJECT MATTER
C07K14/54 C07K16/24 C07K14/47

According to International Patent Classification (IPC) or to both national classification and IPC

B. FIELDS SEARCHED

Minimum documentation searched (classification system followed by classification symbols)
C07K

Documentation searched other than minimum documentation to the extent that such documents are included in the fields searched

Electronic data base consulted during the international search (name of data base and, where practical, search terms used)

EPO-Internal, WPI Data

C. DOCUMENTS CONSIDERED TO BE RELEVANT

Category*	Citation of document, with indication, where appropriate, of the relevant passages	Relevant to claim No.
X Y	US 5 847 123 A (YOKOYAMA ET AL) 8 December 1998 (1998-12-08) the whole document -----	1-3,10 4,5,8,9
Y	WO 03/073982 A (ELI LILLY AND COMPANY; BEALS, JOHN, MICHAEL; HUANG, LIHUA; LU, JIRONG;) 12 September 2003 (2003-09-12) the whole document -----	1-5,8-10
Y	DINARELLO CHARLES A: "Blocking IL-1 in systemic inflammation." THE JOURNAL OF EXPERIMENTAL MEDICINE. 2 MAY 2005, vol. 201, no. 9, 2 May 2005 (2005-05-02), pages 1355-1359, XP002373033 ISSN: 0022-1007 the whole document -----	1-10
	-/--	

[X] Further documents are listed in the continuation of Box C.

[X] See patent family annex.

* Special categories of cited documents :

"A" document defining the general state of the art which is not considered to be of particular relevance

"E" earlier document but published on or after the international filing date

"L" document which may throw doubts on priority claim(s) or which is cited to establish the publication date of another citation or other special reason (as specified)

"O" document referring to an oral disclosure, use, exhibition or other means

"P" document published prior to the international filing date but later than the priority date claimed

"T" later document published after the international filing date or priority date and not in conflict with the application but cited to understand the principle or theory underlying the invention

"X" document of particular relevance; the claimed invention cannot be considered novel or cannot be considered to involve an inventive step when the document is taken alone

"Y" document of particular relevance; the claimed invention cannot be considered to involve an inventive step when the document is combined with one or more other such documents, such combination being obvious to a person skilled in the art.

"&" document member of the same patent family

Date of the actual completion of the international search	Date of mailing of the international search report
20 March 2006	03/04/2006
Name and mailing address of the ISA/ European Patent Office, P.B. 5818 Patentlaan 2 NL – 2280 HV Rijswijk Tel. (+31–70) 340–2040, Tx. 31 651 epo nl, Fax: (+31–70) 340–3016	Authorized officer Heder, A

Form PCT/ISA/210 (second sheet) (April 2005)

INTERNATIONAL SEARCH REPORT

International application No
PCT/EP2006/050060

C(Continuation). DOCUMENTS CONSIDERED TO BE RELEVANT

Category*	Citation of document, with indication, where appropriate, of the relevant passages	Relevant to claim No.
Y	FURST D E: "Anakinra: Review of recombinant human interleukin-I receptor antagonist in the treatment of rheumatoid arthritis" CLINICAL THERAPEUTICS, EXCERPTA MEDICA, PRINCETON, NJ, US, vol. 26, no. 12, December 2004 (2004-12), pages 1960-1975, XP004780658 ISSN: 0149-2918 the whole document	1,2,6-10
Y	MATSUKAWA A ET AL: "Analysis of the cytokine network among tumor necrosis factor alpha, interleukin-1beta, interleukin-8, and interleukin-1 receptor antagonist in monosodium urate crystal-induced rabbit arthritis." LABORATORY INVESTIGATION; A JOURNAL OF TECHNICAL METHODS AND PATHOLOGY. MAY 1998, vol. 78, no. 5, May 1998 (1998-05), pages 559-569, XP009063666 ISSN: 0023-6837 the whole document	1-10
T	PETRILLI ET AL: "The inflammasome" CURRENT BIOLOGY, CURRENT SCIENCE,, GB, vol. 15, no. 15, 9 August 2005 (2005-08-09), page R581, XP005040807 ISSN: 0960-9822 the whole document	
T	MARTINON FABIO ET AL: "Inflammatory caspases: linking an intracellular innate immune system to autoinflammatory diseases." CELL. 28 MAY 2004, vol. 117, no. 5, 28 May 2004 (2004-05-28), pages 561-574, XP002373034 ISSN: 0092-8674	

INTERNATIONAL SEARCH REPORT

International application No.
PCT/EP2006/050060

Box II Observations where certain claims were found unsearchable (Continuation of item 2 of first sheet)

This International Search Report has not been established in respect of certain claims under Article 17(2)(a) for the following reasons:

1. [X] Claims Nos.:
because they relate to subject matter not required to be searched by this Authority, namely:

Although claims 1-9 are directed to a method of treatment of the human/animal body, the search has been carried out and based on the alleged effects of the compound/composition.

2. [ ] Claims Nos.:
because they relate to parts of the International Application that do not comply with the prescribed requirements to such an extent that no meaningful International Search can be carried out, specifically:

3. [ ] Claims Nos.:
because they are dependent claims and are not drafted in accordance with the second and third sentences of Rule 6.4(a).

Box III Observations where unity of invention is lacking (Continuation of item 3 of first sheet)

This International Searching Authority found multiple inventions in this international application, as follows:

1. [ ] As all required additional search fees were timely paid by the applicant, this International Search Report covers all searchable claims.

2. [ ] As all searchable claims could be searched without effort justifying an additional fee, this Authority did not invite payment of any additional fee.

3. [ ] As only some of the required additional search fees were timely paid by the applicant, this International Search Report covers only those claims for which fees were paid, specifically claims Nos.:

4. [ ] No required additional search fees were timely paid by the applicant. Consequently, this International Search Report is restricted to the invention first mentioned in the claims; it is covered by claims Nos.:

Remark on Protest

[ ] The additional search fees were accompanied by the applicant's protest.

[ ] No protest accompanied the payment of additional search fees.

INTERNATIONAL SEARCH REPORT

Information on patent family members

International application No
PCT/EP2006/050060

Patent document cited in search report		Publication date	Patent family member(s)			Publication date
US 5847123	A	08-12-1998	CA	2209387	A1	02-01-1998
			DE	69700616	D1	18-11-1999
			DE	69700616	T2	16-03-2000
			EP	0818439	A2	14-01-1998
			TW	415933	B	21-12-2000
WO 03073982	A	12-09-2003	AU	2003208946	A1	16-09-2003
			EP	1481010	A2	01-12-2004
			JP	2005518802	T	30-06-2005