US00D698231S

(12) United States Design Patent

Damen et al.

(10) Patent No.: US D698,231 S
(45) Date of Patent: ** Jan. 28, 2014

(54) **INTEGRATED PANEL CLIP**

(75) Inventors: **Michael Damen**, Rochetoirin (FR); **Guillaume Martin**, Rochetoirin (FR)

(73) Assignee: **3form, Inc.**, Salt Lake City, UT (US)

(**) Term: **14 Years**

(21) Appl. No.: **29/411,835**

(22) Filed: **Jan. 26, 2012**

(51) **LOC (10) Cl.** **08-08**

(52) **U.S. Cl.**
USPC **D8/394**; D8/395

(58) **Field of Classification Search**
USPC D8/354, 356, 371, 394–396; D19/65, D19/86; D24/128; 248/74.2, 215, 227.1, 49, 248/300, 301, 316.7, 51, 489; 24/570, 3.12; D32/61; D11/78.1
See application file for complete search history.

(56) **References Cited**

U.S. PATENT DOCUMENTS

D241,007	S	*	8/1976	Solo	D8/367
3,982,307	A	*	9/1976	Smith et al.	24/543
4,807,334	A	*	2/1989	Blanchard	24/487
4,835,824	A	*	6/1989	Durham et al.	24/339
4,839,947	A	*	6/1989	Cohen et al.	24/499
5,159,730	A	*	11/1992	Radvin	24/543
D332,047	S	*	12/1992	Kluk et al.	D8/367
D367,223	S	*	2/1996	Adams	D8/395
D393,588	S	*	4/1998	Tuthill	D8/384
D426,767	S	*	6/2000	Meyers	D8/395

* cited by examiner

Primary Examiner — John Windmuller
(74) *Attorney, Agent, or Firm* — Workman Nydegger

(57) **CLAIM**

The ornamental design for an integrated panel clip, as shown and described.

DESCRIPTION

FIG. **1** is a perspective environmental view of an integrated panel clip;
FIG. **2** is a perspective view thereof;
FIG. **3** is a front elevational view thereof, the rear elevational view being a mirror image;
FIG. **4** is a left elevational view thereof;
FIG. **5** is a right elevational view thereof;
FIG. **6** is a top plan view thereof; and,
FIG. **7** is a bottom plan view thereof.
The broken lines included in the drawings are for illustrative purposes and form no part of the claimed design.

1 Claim, 3 Drawing Sheets

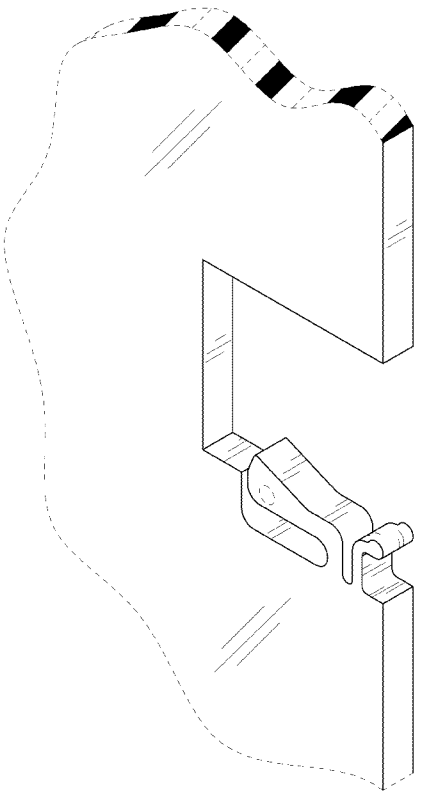

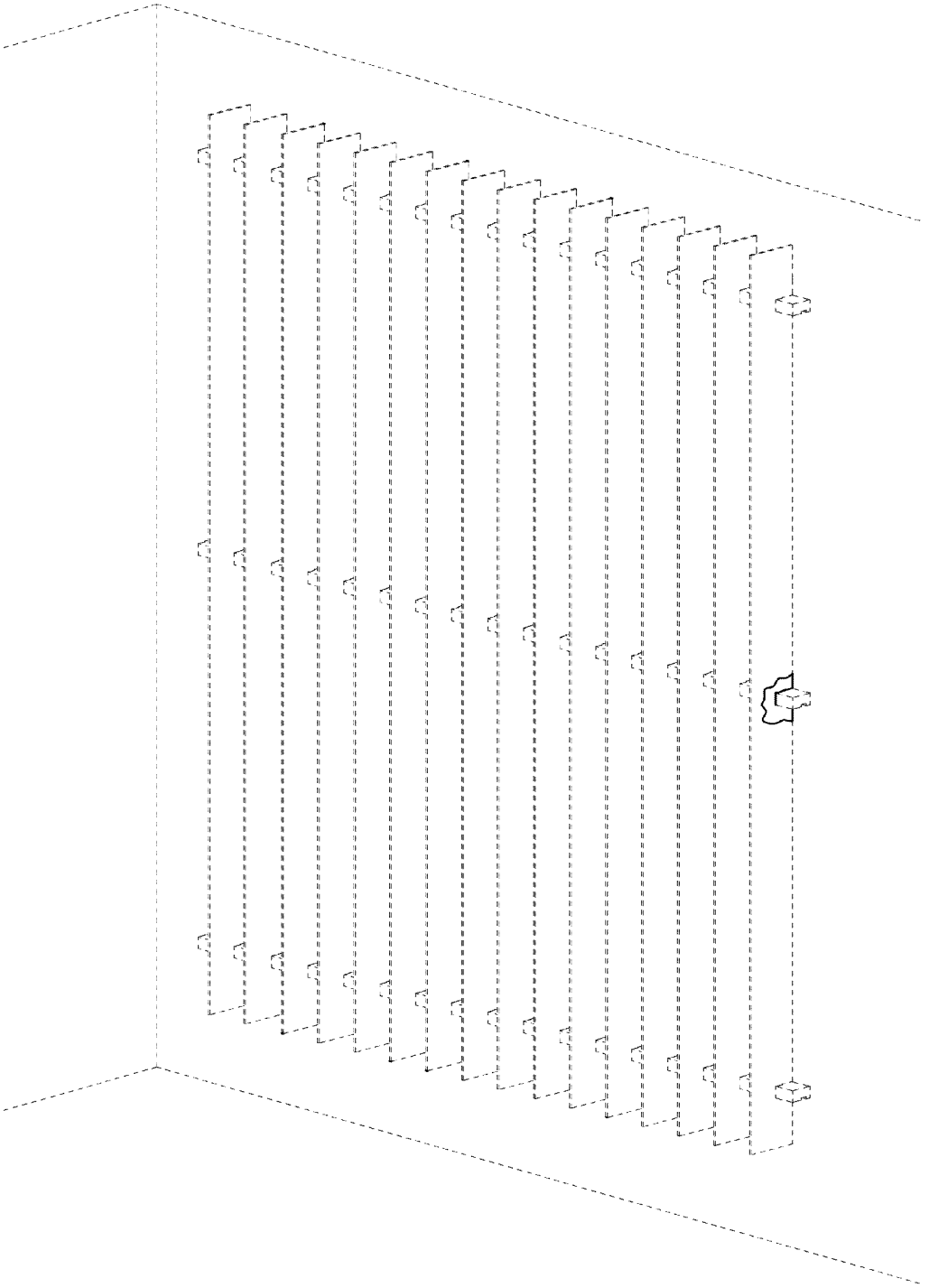

Fig. 1

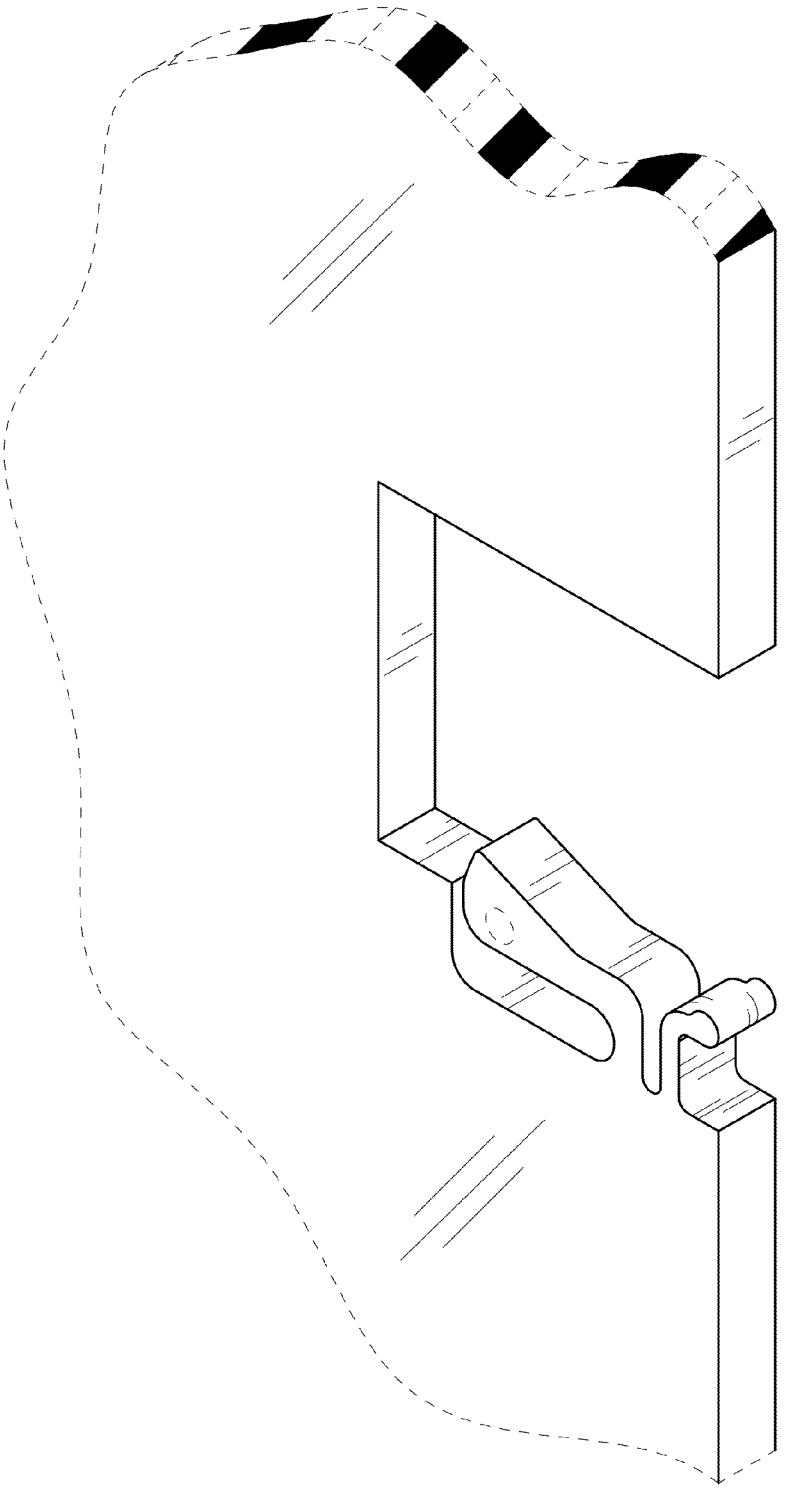

Fig. 2

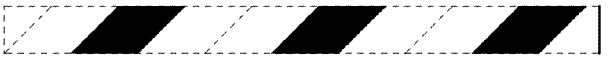

Fig. 6

Fig. 4

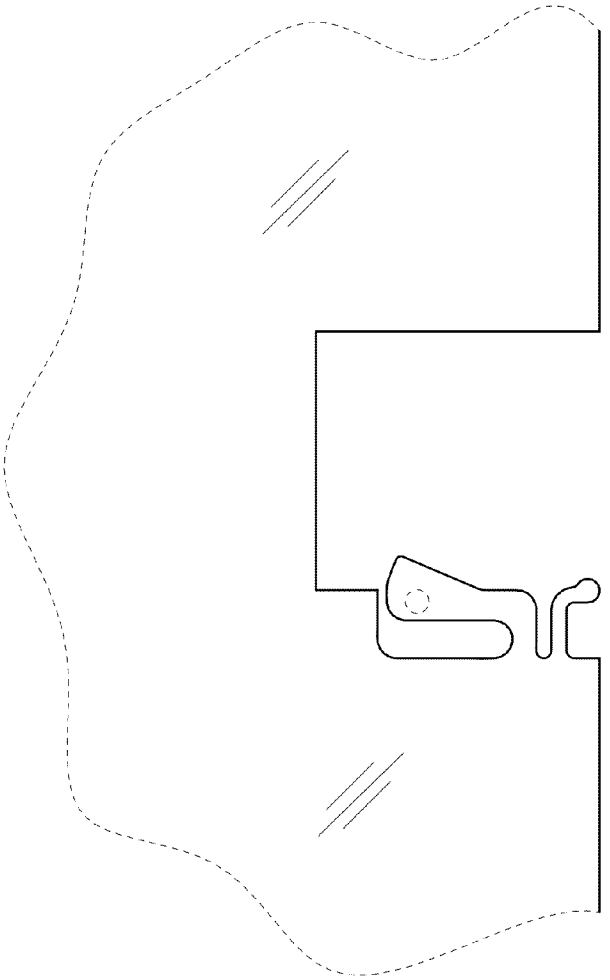

Fig. 3

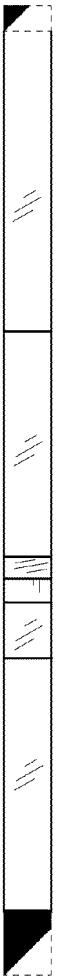

Fig. 5

Fig. 7