Nov. 4, 1924. 1,514,081

F. R. HAHN

CONCRETE BUILDING CONSTRUCTION

Original Filed March 2, 1917

Fig. 1.

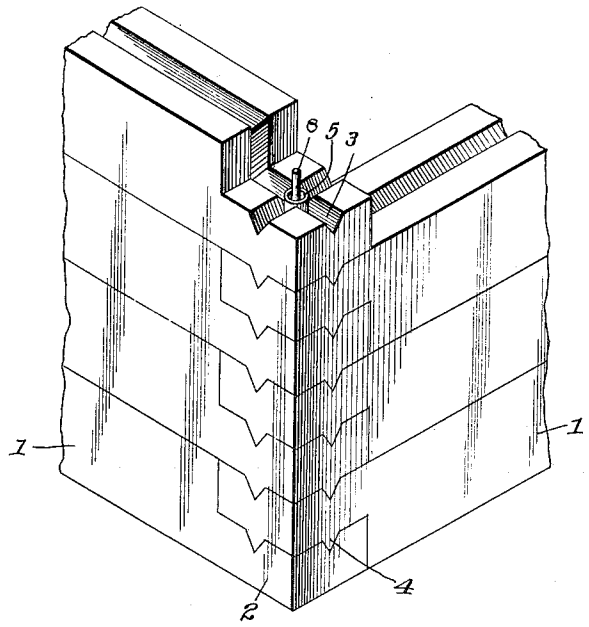

Fig. 2.

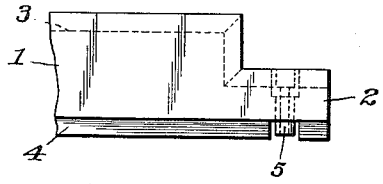

Fig. 3.

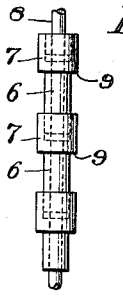

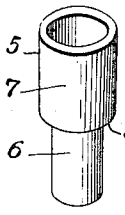

Fig. 4.

Inventor
Frank R. Hahn,

By George T. Beam

Attorney

Patented Nov. 4, 1924. 1,514,081

UNITED STATES PATENT OFFICE.

FRANK R. HAHN, OF DECATUR, ILLINOIS.

CONCRETE BUILDING CONSTRUCTION.

Application filed March 2, 1917, Serial No. 151,906. Renewed April 2, 1924.

To all whom it may concern:

Be it known that I, FRANK R. HAHN, a resident of Decatur, county of Macon and State of Illinois, have invented certain new and useful Improvements in Concrete Building Constructions, of which the following is a specification.

My invention relates to improvements in building structures, and particularly to small structures, such as garages, conservatories, pantries, farm buildings, and the like, which are auxiliary to main buildings or structures, and which are comparatively light and have a comparatively small weight above.

The principal object of this invention is the provision of such a structure composed of a plurality of elements formed of cement or other plastic material and arranged to be assembled and held together to form the complete structure, provision being made so that the structure may be erected for either temporary or permanent purposes, the elements being securely locked and held together, and the invention further being directed to the particular means for holding the various units together.

To the accomplishment of the foregoing and such other objects as may hereinafter appear, my invention consists in the construction, combination and arrangement of parts hereinafter described and then sought to be defined in the appended claims, reference being had to the accompanying drawings forming a part hereof and which show various embodiments of my invention, merely for illustrative purposes, it being expressly understood that various changes may be made in practice within the scope of the claims without digressing from my inventive idea.

In the drawings,

Figure 1 represents a perspective view of the corner of a structure composed of a plurality of elements constructed and secured together according to my invention;

Figure 2 is a side elevation of the end portion of one of the elements;

Figure 3 is a detailed view of the locking or securing means shown in Figures 1 and 2;

Figure 4 is a detailed view of one of the sleeves.

In building operations it is often found desirable and advisable to erect additional or auxiliary structures of comparatively small height and weight and these structures do not have to be as substantial or as well built as the main structure, the cost of such structures being another material item to be considered. In view of these conditions, I have devised the construction illustrated in this application, which will serve the required purposes, being of sufficient strength and rigidity and which can be erected at a minimum cost and securely held together by simple and effective means.

Referring now to the drawings, and at first, to Figures 1 and 2, the numeral 1 designates one form of element constructed according to my invention, this element or unit is of elongated shape and provided with a reduced end portion 2, having a groove 3 on one side or face and a tongue or flange 4 on the other side or face so that adjacent elements or units will overlap and be connected together by the interfitting parts.

In order to provide a securing means for these units or elements, I place the sleeve member 5 in the reduced portion 2 of the unit or element shown in Figure 1. This sleeve 5 has two parts of different external and internal diameters, the smaller one 6 being longer than and adapted to fit within the larger one 7, particularly as illustrated in Figure 3. In the continuous sleeve or pipe which is formed by these sleeve members interfitting, I place the securing rod or member 8 which is suitably anchored at each end and serves to hold the parts securely together and still permit them to be taken apart for knocking down the structure, the particular form of anchoring means not forming an essential part of this invention.

It is to be noted that by constructing the sleeve member 5 as described, an external or exposed shoulder or abutment 9 is provided which functions to properly support the sleeve member in the unit or element.

It is therefore seen that I have provided a simple structure composed of separate units which is strong and rigid and securely held together, and which may be readily knocked down, if built for temporary purposes.

What I claim is:

1. A wall construction of the character described, including, in combination, a plurality of slab units having reduced portions at their ends arranged to fit corresponding portions on adjacent slab units at right angles, and a securing means passed through the

reduced portions of all of the slab units at the corner for holding the units in assembled relation.

2. A construction unit of the character described comprising a slab having a tongue formed in one edge and a groove formed in the other edge, whereby adjacent units will fit together, said slab having one end reduced to receive a corresponding reduced end of the adjacent and interfitting slabs, said reduced portion of the slab being formed with an aperture and a sleeve positioned in said aperture, said sleeve having one part of greater diameter than the other so that the sleeve of the adjacent unit will fit therein, said combined sleeve being adapted to receive a rod for securing the construction together.

3. A wall construction, including in combination, a plurality of units having overlapping parts, a sleeve member cast in each unit, each sleeve member having portions of different diameters so that the sleeve members of the adjoining units telescope one within the other to form a continuous sleeve and a securing rod passed thru said sleeve.

4. A wall construction including, in combination, a plurality of units having overlapping parts, a sleeve member cast in each unit, said sleeve member having parts formed on different internal diameters and different external diameters, whereby one portion has a comparatively large bore and the other portion a comparatively small bore communicating therewith, said sleeve also having an exposed shoulder or abutment, the smaller part of the sleeve of one unit being adapted to fit within the larger bore of the sleeve of the adjacent unit, and a single securing means adapted to pass through the sleeve of the assembled units.

5. A construction unit of the character described comprising a slab having one end reduced to receive a correspondingly reduced end of an adjacent and overlapping slab, said reduced portion of the slab being formed with an aperture and a sleeve member positioned in said aperture, said sleeve member having one part of greater diameter than the other so that the sleeve of the adjacent unit will fit therein to provide a combined sleeve adapted to receive a single securing means.

FRANK R. HAHN.