June 8, 1965 E. H. GREEN 3,188,008

VARIABLE SPRAY CONTROL FOR AN AEROSOL DISPENSER

Filed Jan. 30, 1962 2 Sheets-Sheet 1

Fig. 1

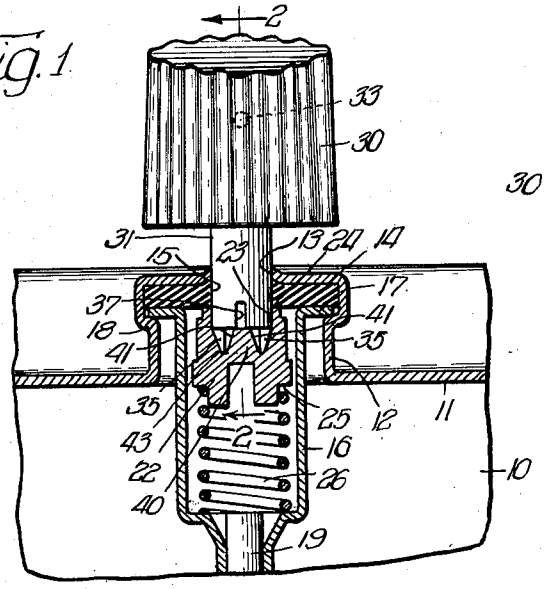


Fig. 2

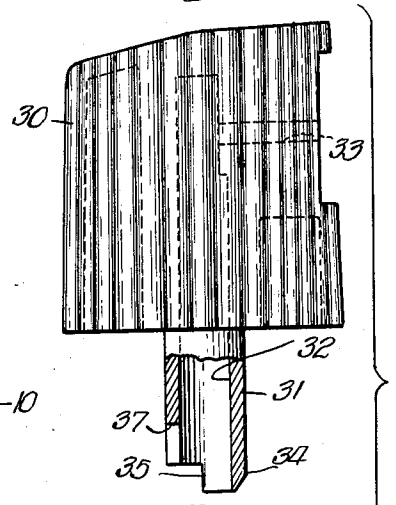


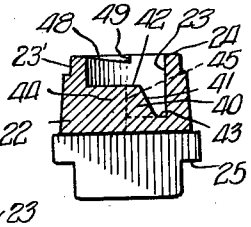


Fig. 4

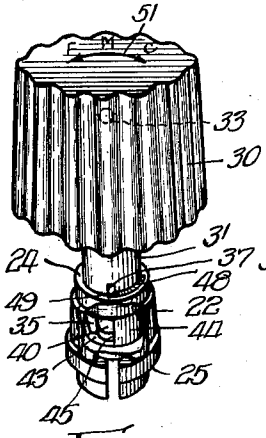


Fig. 6

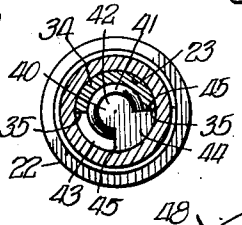


Fig. 5

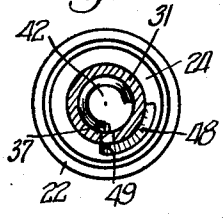


Fig. 3

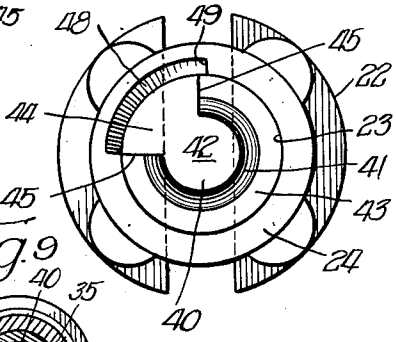


Fig. 7

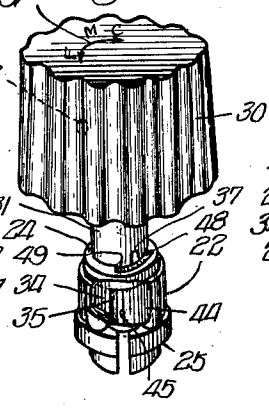


Fig. 8

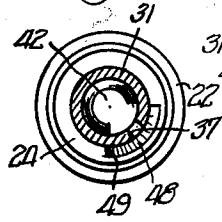


Fig. 9

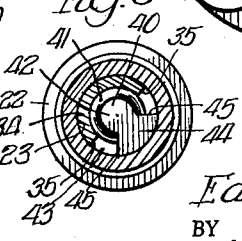


INVENTOR.
Edward H. Green,
BY
Cromwell, Grist & Warden
attys

June 8, 1965 E. H. GREEN 3,188,008

VARIABLE SPRAY CONTROL FOR AN AEROSOL DISPENSER

Filed Jan. 30, 1962 2 Sheets-Sheet 2

Fig. 10

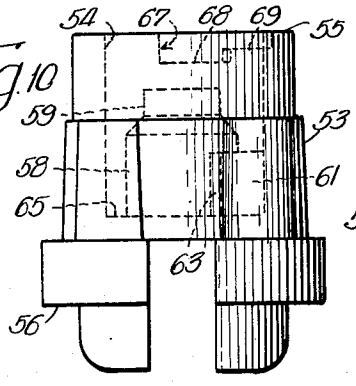


Fig. 11

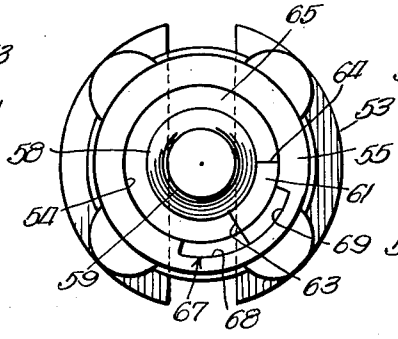


Fig. 12

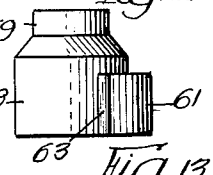


Fig. 13

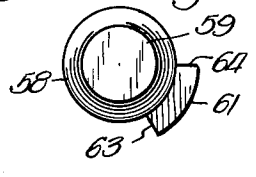


Fig. 14

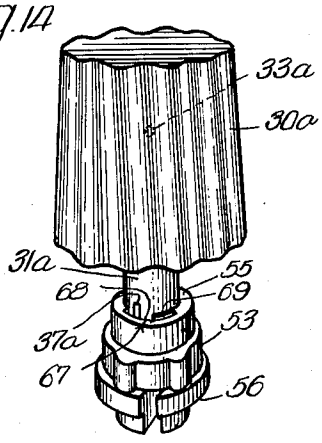


Fig. 15

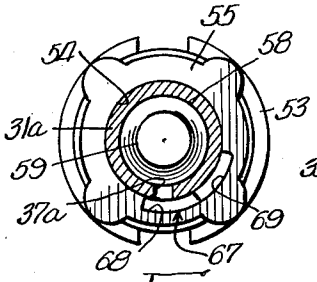


Fig. 16

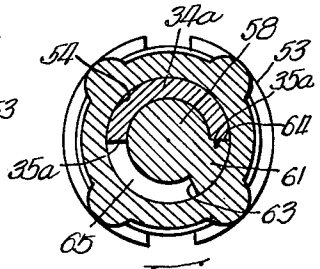


Fig. 17

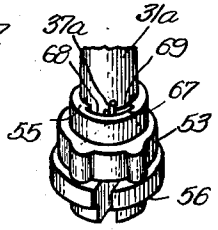


Fig. 18

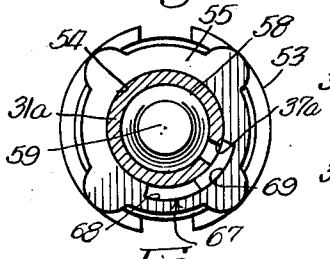


Fig. 19

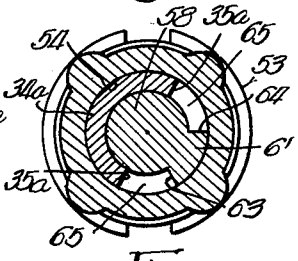


Fig. 20

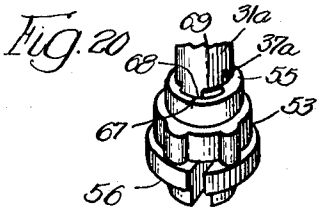


Fig. 21

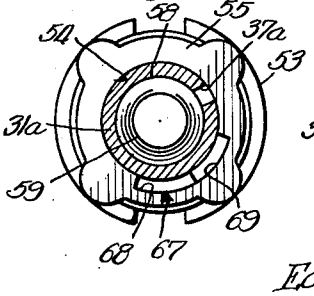


Fig. 22

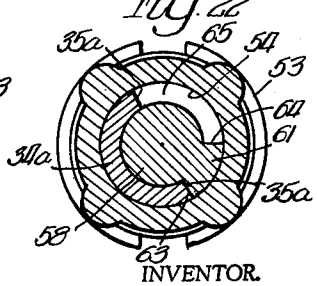


INVENTOR.
Edward H. Green,
BY
Cromwell, Greist & Warden
Attys

United States Patent Office 3,188,008 Patented June 8, 1965



3,188,008

# VARIABLE SPRAY CONTROL FOR AN AEROSOL DISPENSER

Edward H. Green, % Newman-Green Inc., 57 Interstate Road, Addison, Ill.

Filed Jan. 30, 1962, Ser. No. 169,841
14 Claims. (Cl. 239—337)

The present invention relates to aerosol dispensers and, more particularly, to a new and improved aerosol dispenser valve having a variable spray control feature.

It is the general object of the present invention to provide a new and improved aerosol dispenser valve wherein the fineness and coarseness of the spray of the pressurized product dispensed therethrough may be easily controlled.

An important object of the present invention is to provide a new and improved aerosol dispenser valve including a valve member having a socket formed in the top thereof, a spray head having a depending tubular stem rotatably seated in the socket of the valve member, a vertically extending slot formed in the end of the tubular valve stem and terminating at its upper end above an upper, inclined surface of a notch formed in that interior wall of the socket which is adjacent the stem whereby to define an orifice opening into the spray head stem, and means for varying the size of the orifice opening upon rotation of the spray head relative to the valve member to control the coarseness and fineness of the product spray from the spray head.

Another important object of the present invention is to provide a new and improved aerosol dispenser valve of the character described wherein the inner portion of the socket wall is disposed about and adjacent to the stem and is provided with a depressed portion to define either an inclined ramp or stepped notch configuration which defines the lower edge of the orifice opening whereby the size of the orifice opening is varied upon rotation of the spray head relative to the valve member.

Another object of the present invention is to provide a new and improved aerosol dispenser valve of the character described wherein means are provided in the valve member socket for limiting rotation of the orifice slot portion of the spray head stem to rotation between limit positions providing the finest and coarsest product sprays.

Certain other objects of the invention will, in part, be obvious, and will in part appear hereinafter.

For a more complete understanding of the nature and scope of the invention reference may now be had to the accompanying drawings wherein:

FIG. 1 is an enlarged vertical central section taken through an aerosol dispenser valve embodying one form of the invention with the spray head thereof being shown in elevation;

FIG. 2 is a further enlarged exploded vertical section of the spray head and valve member of the dispenser valve of FIG. 1 taken generally on the line 2—2 of FIG. 1 with the upper portion of the spray head being shown in elevation;

FIG. 3 is a still further enlarged top plan view of the valve member of FIGS. 1 and 2;

FIG. 4 is an enlarged perspective view, partially broken away, of the assembled spray head and valve member of FIG. 1 with the spray head rotatably adjusted to provide a product spray of maximum coarseness;

FIG. 5 is an enlarged horizontal section taken through the orifice slot and above the valve member of the assembled spray head and valve member of FIG. 4 as rotatably adjusted for a product spray of maximum coarseness;

FIG. 6 is an enlarged horizontal section taken through the lower portion of the valve member socket of the assembled spray head and valve member as rotatably adjusted in FIG. 4;



FIG. 7 is an enlarged perspective view similar to FIG. 4 with the spray head rotatably adjusted approximately midway between its coarse and fine spray positions whereby to provide a medium product spray;

FIG. 8 is an enlarged horizontal section similar to FIG. 5 of the assembled spray head and valve member of FIG. 7 as rotatably adjusted for a medium product spray;

FIG. 9 is an enlarged horizontal section similar to FIG. 6 of the assembled spray head and valve member as rotatably adjusted in FIG. 7;

FIG. 10 is an enlarged side elevational view of an alternate form of valve member for use with the spray head of FIG. 2 and having a stepped spray control notch formed on the upper end thereof;

FIG. 11 is a top plan view of the valve member of FIG. 10;

FIG. 12 is a side elevational view of the pilot island and stop member provided in the socket of the valve member of FIGS. 10 and 11;

FIG. 13 is a top plan view of the pilot island and stop member of FIG. 12;

FIG. 14 is an enlarged perspective view similar to FIGS. 4 and 7 of the assembled spray head of FIG. 2 and valve member of FIG. 10 with the spray head rotatably adjusted to provide a product spray of maximum coarseness;

FIG. 15 is an enlarged horizontal section taken through the orifice slot and above the valve member of the assembled spray head and valve member of FIG. 14 as rotatably adjusted for a product spray of maximum coarseness;

FIG. 16 is an enlarged horizontal section taken through the lower portion of the valve member socket of the assembled spray head and valve member as rotatably adjusted in FIG. 14;

FIG. 17 is an enlarged perspective view of the assembly of FIG. 14, with the main body portion of the spray head being broken away, as rotatably adjusted to provide a medium product spray;

FIG. 18 is an enlarged horizontal section similar to FIG. 15 of the assembly as rotatably adjusted in FIG. 17 for a medium product spray;

FIG. 19 is an enlarged horizontal section similar to FIG. 16 of the assembly as rotatably adjusted in FIG. 17;

FIG. 20 is an enlarged perspective view similar to FIG. 17 of the assembly as rotatably adjusted to provide the finest or least coarse product spray;

FIG. 21 is an enlarged horizontal section similar to FIGS. 15 and 18 of the assembly as rotatably adjusted in FIG. 20 for the finest product spray; and

FIG. 22 is an enlarged horizontal section similar to FIGS. 16 and 19 of the assembly as rotatably adjusted in FIG. 20.

As illustrated in FIG. 1, the aerosol dispenser valve of the invention, which dispenser valve is mounted in the open upper end of a container 10 of pressurized product, includes a valve cap 11 which is mounted on the container 10 in a manner well known in the art and which is provided with an upstanding center island 12 having a central opening 13 formed in the top thereof. An annular sealing gasket 14 is seated against the underside of the top wall of the center island 12 of the valve cap 11 and has a central opening 15 formed therein in alignment with the opening 13 in the top wall of the center island 12. A generally cylindrical valve shell 16 is provided at its upper end with an outwardly directed radial flange portion 17 which is seated against the underside of the sealing gasket 14. The side wall of the center island 12 is crimped inwardly, as at 18, in a manner known in the art whereby to retain the sealing gasket 14 and the valve shell 16 in their assembled positions. The lower end of the valve shell 16, which is reduced-in-diameter, has the upper end of a dip tube 19 supported therein, the lower end of the dip tube 19 ex-

tending downwardly into proximity with the bottom surface of the container 10.

In the form of the invention illustrated in FIGS. 1–9, a generally cylindrical valve member 22 is provided in the valve shell 16. The valve member 22 is characterized by an upwardly opening centrally located socket 23 which is formed in its upper end, the diameter of the socket 23 being approximately equal to the diameter of the opening 15 formed in the sealing gasket 14, with a generally planar annular upper rim surface 24 being provided at the upper end of the valve member 22. The lower end of the valve member 22 is reduced-in-diameter whereby to define a downwardly facing spring seat 25. A spring 26 which is seated between the spring seat 25 of the valve member 22 and the bottom of the valve shell 16 normally urges the valve member 22 upwardly whereby to provide a fluid-tight seal between the upper rim surface 24 of the valve member 22 and the underside of the sealing gasket 14 about the opening 15 formed therein.

The aerosol dispenser valve also includes a spray head 30 having a depending tubular stem portion 31 with an outer diameter approximately equal to the diameter of the socket 23 of the valve member 22. A laterally extending discharge passage 33 extends through the wall of the main body portion of the spray head 30 and intersects the upper portion of a bore 32 which extends upwardly through the stem portion 31. The lower end of the tubular stem portion 31 is provided with a stepped configuration in the form of a semi-cylindrical skirt portion 34 having an arcuate length of 180° which extends downwardly beyond the rest of the stem portion 31 with the opposite side edges of the skirt portion 34 defining vertically disposed diametrically aligned abutment surfaces 35. A vertically extending slot 37 is formed in the lower end of the tubular stem portion 31 diametrically opposite from the arcuate center of the skirt portion 34.

The bottom surface of the socket 23 of the valve member 22 is provided with an integral centrally located upstanding island 40 having a height approximately equal to the longitudinal dimension of the skirt portion 34 of the spray head stem 31. The upstanding island 40, which is in the general form of a truncated cone, is characterized by a conically tapered side wall 41 and a flat upper end 42. The generally circular bottom edge of the island 40 is spaced inwardly from the side walls of the socket 23 whereby to define a track 43 in which the lower end of the skirt portion 34 of the spray head stem 31 is adapted to be seated for rotatable sliding movement relative to the valve member 22.

For purposes that will be evident hereinafter, the space defined in on equadrant of the socket 23 between the inner and bottom walls thereof and the upstanding island 40 is filled by a stop member 44 having a flat upper surface in the same horizontal plane with the flat upper end 42 of the island 40, which stop member 44 is preferably formed integrally with the valve member 22 and the upstanding island portion 40 thereof. The opposite ends of the stop member 44 are disposed vertically and spaced 90° apart whereby to define abutment surfaces 45 engageable by the abutment surfaces 35 of the skirt portion 34 of the spray head stem 31.

To assemble the spray head 30, the stem portion 31 thereof is inserted downwardly through the openings 13 and 15 in the top wall of the center island 12 of the valve cap 11 and the sealing gasket 14, respectively, and into the socket 23 of the valve member 22 with the lower edge of the skirt portion 34 of the spray head stem 31 being seated in the track 43 provided in the socket 23. Due to the presence of the stop member 44, the arcuate length of the track 43 is 270°. As the arcuate length of the bottom edge of the skirt portion 34 of the spray head stem 31 is 180°, it is seen that the spray head 30 is limited to 90° of rotation relative to the valve member 22.

With the spray head 30 and the valve member 22 assembled as described, the upper end of the slot 37 formed in the lower end of the valve stem 31, in this embodiment of the invention, terminates a relatively short distance above the upper rim surface 24 of the valve member 22 whereby to define a control orifice which extends through the wall of the tubular stem portion 31 of the spray head 30, the lower edge of the orifice slot 37 being defined by the inner edge of the upper rim surface 24 of the valve member 22. As presently will be apparent, this slot need not terminate above the rim surface 24 as illustrated. As is discussed hereinafter in connection with the inclined recess 48, shown in FIG. 2, this recess actually extends below the rim surface 24 to define a ramp surface on the interior wall portion of the socket 23. Thus the slot 37 need only extend above this ramp surface and not necessarily above the rim surface 24, as is shown in this embodiment of the invention. The foregoing structural arrangement provides a dispenser valve wherein the spray head 30 is rotatable relative to the valve member 22 through an angle of 90° with the limits of rotation of the spray head 30 being determined by engagement of the opposite abutment surfaces 35 of the skirt portion 34 of the spray head stem 31 with the opposite abutment surfaces 45 of the stop member 44. Although not shown in the drawings, a lug arrangement well known in the art may be provided for preventing rotation of the valve member 22 relative to the valve shell 16 during rotation of the spray head 30. With the foregoing structural arrangement wherein the orifice slot 37 is located diametrically opposite from the arcuate center of the skirt portion 34, the orifice slot 37, in the 90° rotation permitted therefor, is rotatable in generally radial alignment with the stop member 44 with its lower open end being substantially closed by the upper surface of the stop member 44.

The upper portion of the valve shell is at all times filled with pressurized product, which product passes upwardly through the dip tube 19 into the shell 16 and upwardly past the lower portion of the valve member 22, sufficient clearance or known type passages being provided between the valve member 22 and the inner surfaces of the shell 16. Thus, when the spray head 30 is depressed, the valve member 22 is moved downwardly away from its sealed engagement with the underside of the sealing gasket 14 whereby to permit passage of the pressurized product through the orifice slot 37 into the bore 32 of the depending stem 31 of the spray head 30 and outwardly to atmosphere through the discharge passage 33 formed in the spray head 30.

Inasmuch as it desirable that different products be dispensed in sprays that vary in coarseness and fineness, provision is made in the foregoing aerosol dispenser valve for varying the size of the orifice slot 37 upon rotation of the spray head 30 relative to the valve member 22 whereby to control the coarseness and fineness of the product spray dispensed from the container 10. For this purpose the upper end of the valve member is provided with an arcuate depressed notch or a recess 48 having a ramp surface or an arcuate length of approximately 90°. The recess 48 cuts into the annular wall 23′ forming socket 23, on the inside of the socket 23 and is below the surface 24, but has a width somewhat less than the radial thickness of the wall 23′ at the surface 24 so as not to disturb the outer circumferential continuity of the surface 24. Thus, the valve member 22 may be urged into sealed seating engagement with gasket 14 irrespective of the presence of recess 48. The ramp surface of recess 48 is gradually inclined downwardly from the upper rim surface 24 at a point thereon substantially radially aligned with one of the abutment surfaces 45 of the stop member 44 with the deepest end 49 of the recess 48 being disposed slightly beyond the other abutment surface 45 of the stop member 44, as best illustrated in FIG. 3. The arcuate length of the depressed ramp thus conforms to or is radially aligned with the path of rotation permitted the orifice slot 37 with different portions of the inner inclined edge of the

recess 48 defining the lower edge of the orifice slot 37 in all rotative positions of the spray head 30.

When the spray head 30 is rotated to its limit position wherein the orifice slot 37 is radially aligned with the deepest end 49 of the recess 48, as illustrated in FIGS. 4, 5 and 6, the entrance to the orifice slot 37 is of maximum area whereby to provide the coarsest product spray. As the spray head 30 is rotated toward its opposite limit position, the area of the entrance to the orifice slot 37 decreases progressively until it is at its minimum at the opposite limit position with the product spray becoming progressively finer or less coarse. A medium spray position of the spray head 30 is illustrated in FIGS. 7, 8 and 9.

Suitable indicia, such as an arcuate double-headed arrow 51 and the letters F, M and C designating fine, medium and coarse sprays, respectively, may be provided on the upper surface of the spray head 30, as illustrated in FIGS. 4 and 5, to indicate in which direction the spray head 30 should be rotated to obtain the desired product spray.

An alternate form of valve member 53, which is also generally cylindrical, is illustrated in FIGS. 10–22. As will be clearly described hereinafter, this alternate form of valve member 53 is adapted to provide three separate and different product spray conditions, that is, maximum coarse, medium and fine. As previously described herein, the valve member 22 of FIGS. 1–9 provides a product spray which increases or decreases in coarseness continuously and progressively during rotation of the spray head 30. The valve member 53, which is similar in construction to the valve member 22 of FIGS. 1–9, is characterized by an upwardly opening centrally located socket 54 which defines a generally planar annular upper rim surface 55 at the upper end of the valve member 53, and by a reduced-in-diameter lower end which defines a downwardly facing spring seat 56. The valve member 53 is adapted to be resiliently urged upwardly whereby to normally provide a fluid-tight seal between the upper rim surface 55 and the underside of a sealing gasket in the same manner as described for the valve member 22 of FIGS. 1–9.

As the longitudinal or vertical dimension of the valve member 53 is greater than that of the valve member 22, the valve member 53 is adapted for use with a spray head 30*a* which is substantially identical to the spray head 30 of FIGS. 1, 2, 4 and 7 except that the depending tubular stem 31*a* thereof is correspondingly longer. Likewise, the orifice slot 37*a* is of a greater length so that its upper end terminates a relatively short distance above the upper rim surface 55 of the valve member 53 when the depending stem 31*a* of the spray head 30*a* is properly seated in the socket 54 of the valve member 53. The lower end of the tubular stem portion 31*a*, which is identical to that of the tubular stem 31 in FIGS. 1, 2, 4 and 7, is characterized by a stepped configuration in the form of a semi-cylindrical skirt portion 34*a* having an arcuate length of 180° which extends downwardly beyond the rest of the stem portion 31*a* with the opposite side edges of the skirt portion 34*a* defining vertically disposed diametrically aligned abutment surfaces 35*a* and with the arcuate center of the skirt portion 34*a* being positioned diametrically opposite from the vertically extending orifice slot 37*a*.

The bottom surface of the socket 54 of the valve member 53 is provided with a centrally located upstanding cylindrical pilot or island 58 having a diameter approximately equal to the inner diameter of the tubular stem portion 31*a* of the spray head 30*a* and a reduced-in-diameter upper end portion 59. As best illustrated in FIGS. 12 and 13, a portion of the outer surface of the center pilot or island 58 is provided with an arcuate stop member 61 having a height approximately equal to the longitudinal dimension of the skirt portion 34*a* of the spray head stem 31*a* and an arcuate length of 60°. The radial thickness of the stop member 61 is approximately equal to the radial dimension of the space defined between the outer surface of the island 58 and the bore of the socket 54 whereby the stop member 61 substantially fills a portion of the annular space defined between the island 58 and the bore of the socket 54. Preferably, the center island or pilot 58 and the stop member 61 are formed or molded integrally with the valve member 53.

The opposite ends of the stop member 61 are disposed vertically and spaced 60° apart whereby to define abutment surfaces 63 and 64 which are engageable by the abutment surfaces 35*a* of the skirt portion 34*a* of the spray head stem 31*a*. The space defined between the outer surface of the center island 58, the bore of the valve member socket 54, and the opposite abutment surfaces 63 and 64 of the stop member 61 provides a non-continuous generally annular track 65 having an arcuate length of 300°. As the arcuate length of the skirt portion 34*a* of the spray head stem 31*a* is 180°, it is seen that the spray head 30*a* is limited to 120° of rotation relative to the valve member 53.

When the spray head 30*a* and the valve member 53 are assembled as shown in FIGS. 14, 17 and 20, the portion of the slot 37*a* exposed above the inner edge of the upper rim surface 55 defines a control orifice which extends through the wall of the tubular stem portion 31*a*, the lower edge of the orifice slot 37*a* being defined by the inner edge of the upper rim surface 55 of the valve member 53. With the foregoing structural arrangement, the spray head 30*a* is rotatable relative to the valve member 53 through an angle of 120° with the limits of rotation of the spray head 30*a* being determined by engagement of the opposite abutment surfaces 35*a* of the skirt portion 34*a* of the spray head stem 31*a* with the opposite abutment surfaces 63 and 64 of the stop member 61.

In order to provide either a fine, medium, or coarse product spray when the spray head 30*a* is in different rotational positions relative to the stop member 61, a two-step arcuate notch 67 is formed in the upper end of the valve member 53 cutting into the wall of socket 54 and the inner edge portion of the upper rim surface 55 of the valve member 53 and extending below said surface 55. The arcuate center of the stepped notch 67 is radially aligned with the abutment surface 63 of the stop member 61, as best illustrated in FIG. 11. The notch 67, which has an overall arcuate length of 90°, is characterized by a first step portion 68 having an arcuate length of 45° and a depth which is approximately twice that of a second step portion 69 which also has an arcute length of 45°. The deepest step portion 68 extends arcuately from a point radially aligned with the abutment surface 63 of the stop member 61 in a direction away from the stop member 61 with the shallowest step portion 69 extending arcuately in the opposite direction, whereby the full arcuate length of the shallowest step portion 69 is radially aligned with approximately three-fourths of the arcuate length of the stop member 61.

As previously set forth herein, the orifice slot 37*a* is located in the lower end of the spray head stem 31*a* diametrically opposite from the arcuate center of the skirt portion 34*a*. Thus, when the spray head 30*a* is in one of its limit positions with one of the skirt portion abutment surfaces 35*a* disposed in abutting engagement with the abutment surface 64 of the stop member 61, as illustrated in FIGS. 14, 15 and 16, the orifice slot 37*a* is radially aligned with the deepest step portion 68 of the stepped notch 67. In this position of the spray head 30*a*, the lower end of the orifice opening 37*a* is defined by the inner edge of the planar bottom surface of the deepest step portion 68 of the stepped notch 67 whereby to provide a maximum size orifice opening and thus a product spray of maximum coarseness when the spray head 30*a* is depressed to open the valve structure in the manner previously described herein.

When the spray head 30*a* is in its opposite limit position

with the other skirt portion abutment surface 35*a* disposed in abutting engagement with the abutment surface 63 of the stop member 61, as illustrated in FIGS. 20, 21 and 22, the slot 37*a* is radially aligned with a non-notched portion of the upper rim surface 55 of the valve member 53 at a point arcuately spaced approximately 45° from the adjacent end of the shallowest step portion 69 of the stepped notch 67. In this position of the spray head 30*a*, the lower end of the orifice opening 37*a* is defined by a non-notched portion of the inner edge of the upper rim surface 55 of the valve member 53 whereby to provide a minimum size orifice opening and thus a fine product spray of minimum coarseness.

When the spray head 30*a* is in a rotative position midway between its two limit positions, as illustrated in FIGS. 17, 18 and 19, the slot 37*a* is radially aligned with the shallowest step portion 69 of the stepped notch 67. In this position of the spray head 30*a*, the lower end of the orifice opening 37*a* is defined by the inner edge of the planar bottom surface of the shallowest step portion 69 of the stepped notch 67 whereby to provide a medium size orifice opening and thus a product spray of medium coarseness.

The upper surface of the spray head 30*a* may be provided with suitable indicia adapted to provide an indication as to which direction the spray head 30*a* should be rotated to obtain a product spray of desired coarseness or fineness, such indicia being identical or similar to that provided on the spray head 30, as illustrated in FIGS. 4 and 7.

Two forms or embodiments of the invention have been presented herein, but it will, of course, be appreciated that the invention is susceptible of incorporation in still other forms coming equally within the spirit and scope of the invention as defined in the appended claims.

I claim:

1. An aerosol dispenser generally cylindrical valve comprising, a valve member having an upwardly opening socket comprising an annular wall having an upper rim surface at the upper end of said wall, means resiliently urging said valve member upwardly to urge the rim surface into sealing engagement with the underside of an annular apertured sealing gasket, a spray head having a depending hollow tubular stem extending downwardly through said sealing gasket and into said socket, said spray head being rotatable relative to said valve member, an orifice opening formed through the wall of said tubular stem for communicating with interior portions of said socket, and means provided in interior portions of said socket wall proximate said upper rim surface for varying the size of said orifice opening upon rotation of said spray head relative to said valve member whereby to control the coarseness and fineness of the spray of pressurized product dispensed through the valve when opened by depressing the spray head.

2. An aerosol dispenser generally cylindrical valve comprising, a valve member having an upwardly opening socket comprising an annular wall which is bounded by a generally planar upper rim surface at its upper end, means resiliently urging said valve member upwardly to urge the rim surface into sealing engagement with the underside of an annular, apertured sealing gasket, a spray head having a depending tubular stem extending downwardly through said sealing gasket and into said socket, said spray head being rotatable relative to said valve member, an orifice opening formed in the wall of said tubular stem for communicating with the interior of said socket, and an arcuate notch of varying depth formed in the interior of said socket wall and positioned rotationally proximate said orifice, whereby to vary the size of said orifice opening upon rotation of said spray head relative to said valve member and thus to control the coarseness and fineness of the spray of pressurized product dispensed through the valve when opened by depressing the spray head.

3. An aerosol dispenser valve comprising, a generally cylindrical valve member having an upwardly opening socket comprising an annular wall having a generally planar upper rim surface at the upper end of said wall, resilient means normally urging said valve member upwardly to urge the rim surface into sealing engagement with the underside of an annular, apertured sealing gasket, a spray head having a depending tubular stem extending downwardly through said sealing gasket and into said valve member socket for rotation relative thereto, means in said socket limiting rotation of said spray head stem therein to less than a full revolution, a vertically extending slot formed in the lower end of said tubular stem to provide an orifice opening through the wall of said tubular stem for communicating with interior portions of said socket, the lower end of said orifice opening being defined by the inner edge of said upper rim surface of said valve member, and an arcuate notch formed in the inner socket wall proximate said upper rim surface with different points on the bottom surface of said notch being spaced varying distances below said upper rim surface, said arcuate notch being positioned proximate said stem orifice and angularly oriented relative to the end limits of rotation of said orifice opening in said tubular stem, whereby relative rotation of said spray head between its limit positions varies the size of said orifice opening to interior portions of said socket through said socket wall arcuate notch and thus controls the coarseness and fineness of the spray of pressurized product dispensed from the valve when it is opened by depressing the spray head thereof.

4. An aerosol dispenser generally cylindrical valve comprising, a valve member having an upwardly opening socket comprising an annular wall and a generally planar upper rim surface at its upper end, means resiliently urging said valve member upwardly to urge the rim surface into sealing engagement with the underside of an annular, apertured sealing gasket, a spray head having a depending tubular stem extending downwardly through said sealing gasket and into said socket, said spray head being rotatable relative to said valve member, an orifice opening formed in the wall of said tubular stem for communicating with interior portions of said valve member, and an inclined ramp formed on the inner edge of said upper rim surface and disposed proximate said opening, whereby to vary the size of said orifice opening upon rotation of said spray head relative to said valve member and thus control the coarseness and fineness of the spray of pressurized product dispensed through the valve when opened by depressing the spray head.

5. An aerosol dispenser generally cylindrical valve comprising, a valve member having an upwardly opening socket comprising an annular wall having a generally planar upper rim surface at its upper end, resilient means normally urging said valve member upwardly to urge the rim surface into sealing engagement with the underside of an annular, apertured sealing gasket, a spray head having a depending tubular stem extending downwardly through said sealing gasket and into said valve member socket for rotation relative thereto, means in said socket limiting rotation of said spray head stem therein to less than a full revolution, a vertically extending slot formed in the lower end of said tubular stem whereby to provide an orifice opening through the wall of said tubular stem, and a depressed inclined ramp formed in the inner portion of said socket annular wall between the end limits of rotation of said orifice opening in said tubular stem, said ramp including wall portions being disposed proximate said tubular stem orifice, whereby relative rotation of said spray head between its limit positions varies the size of said orifice opening and thus controls the coarseness and fineness of the spray of pressurized product dispensed from the valve when it is opened by depressing the spray head thereof.

6. An aerosol dispenser generally cylindrical valve comprising, a valve member having an upwardly opening

socket comprising an annular wall member having a generally planar upper rim surface at its upper end, resilient means normally urging said valve member upwardly into sealing engagement with the underside of an annular, apertured sealing gasket, a spray head having a tubular stem which is characterized by a depending skirt portion having an arcuate length of 180°, said spray head stem extending downwardly through said sealing gasket with said skirt portion being seated in said socket for rotation relative thereto, a stop member provided in the lower end of said valve member socket and having vertically disposed abutment surfaces spaced apart 90° and engageable by the opposite side edges of said skirt portion whereby to limit the rotation of said spray head stem in said socket to 90°, a vertically extending slot formed in the lower end of said tubular stem diametrically opposite from the center of said skirt portion, and a depressed inclined ramp having an arcuate length of 90° formed in the inner portion of said annular wall in alignment generally with said stop member, the inner surface of said wall being in rotative engagement with said stem for defining a lower edge for said slot throughout the arcuate path of movement of said orifice opening, whereby relative rotation of said orifice opening along the inclined ramp formed in the inner socket wall serves to vary the size of said orifice opening to control the coarseness and fineness of the spray of pressurized product dispensed from the valve when it is opened by depressing the spray head thereof.

7. In an aerosol dispenser valve of the type having a generally cylindrical valve member which is provided with an upwardly opening socket comprising an annular wall having a generally planar upper rim surface at the upper end of said wall, resilient means normally urging said valve member upwardly into sealing engagement with the underside of an annular apertured sealing gasket, a spray head having a tubular stem extending downwardly through said apertured sealing gasket and into said socket in said valve member and being rotatable relative to said valve member, said stem having a vertical slot formed in the lower end thereof and being disposed in relatively rotatable relation with an inner surface of said annular wall, the improvement which comprises, an inclined arcuate ramp provided in interior portions of the wall of said valve member, said ramp being disposed proximate said stem slot, and means in said socket of said valve member engageable by said spray head stem for limiting rotation of said spray head relative thereto whereby said orifice slot is rotatable only between the opposite ends of said inclinder ramp thus varying the size of said orifice and controlling the coarseness and fineness of the product spray, the inner inclined edge of said ramp defining a variable lower edge for said orifice.

8. In an aerosol dispenser valve of the type having a generally cylindrical valve member which is provided with an upwardly opening socket comprising an annular wall having a generally planar upper rim surface at its upper end, resilient means normally urging said valve member upwardly to urge the rim surface into sealing engagement with the underside of an annular apertured sealing gasket, a spray head having a tubular stem extending downwardly through said apertured sealing gasket and into said socket in said valve member and being rotatable relative to said valve member, and a vertical slot formed in the lower end of said tubular stem whereby to provide an orifice for the passage of pressurized product into and through said spray head when said valve member is opened by depressing said spray head, the improvement which comprises, a downwardly inclined depressed ramp formed in the inner portion of the wall of said valve socket and having an arcuate length less than 360°, and a stop member in said valve member socket for limiting rotation of said spray head relative thereto, whereby said orifice slot is rotatable only between the opposite ends of said inclined ramp, said ramp wall portions being rotatably disposed proximate said stem slot with the inner wall portion defining said ramp thereby defining the lower end of said orifice slot, rotation of the orifice slot of said spray head stem between the opposite ends of said ramp thereby varying the size of said orifice to control the coarseness and fineness of the product spray.

9. In an aerosol dispenser valve of the type having a generally cylindrical valve member which is provided with an upwardly opening socket comprising an annular wall having generally planar upper rim surface at its upper end, resilient means normally urging said valve member upwardly to position said rim surface in sealing engagement with the underside of an annular apertured sealing gasket, a spray head having a tubular stem extending downwardly through said apertured sealing gasket and into said socket in said valve member and being positioned rotatably adjacent the inner surface of said socket wall, and a vertical slot formed in the lower end of said tubular stem for providing an orifice for the passage of pressurized product into and through said spray head when said valve member is opened by depressing said spray head, the improvement which comprises, the lower end of said spray head stem being provided with a depending skirt portion having an arcuate length of 180° and adapted to be seated in said valve member socket, the center of said skirt portion being disposed diametrically opposite from said vertical slot formed in said stem, a downwardly inclined depressed ramp formed in the inner wall portion of said upper rim surface of said valve member socket, said inclined ramp having an arcuate length of 90°, and a stop member provided in the bottom of said valve member socket and having vertically disposed abutment surfaces spaced 90° apart and adapted to be engaged by the opposite ends of said skirt portion of said spray head stem whereby to limit rotation of said spray head stem in said socket to 90°, said abutment surfaces of said stop member being aligned generally with the opposite ends of said ramp whereby the orifice slot is limited to rotation between the opposite ends of said ramp with the inclined ramp surface defining the lower edge of said orifice, the size of said orifice, therefore, being determined by the rotative position of said spray head relative to said valve member whereby to permit control of the coarseness and fineness of the product spray.

10. An aerosol dispenser generally cylindrical valve comprising, a valve member having an upwardly opening socket comprising an annular wall which is bounded by a generally planar upper rim surface at its upper end, means resiliently urging said valve member upwardly to urge the rim surface into sealing engagement with the underside of an annular, apertured sealing gasket, a spray head having a depending tubular stem extending downwardly through said sealing gasket and into said socket, said spray head being rotatable relative to said valve member, an orifice opening formed in the wall of said tubular stem for communicating with the interior of said socket, said annular wall being rotatably disposed in proximity to said stem, and an arcuate stepped notch having stepped portions of different depths formed in the inner portion of said annular wall whereby to vary the size of said orifice opening upon rotation of said spray head relative to said valve member and thus control the coarseness and fineness of the spray of pressurized product dispensed through the valve when opened by depressing the spray head.

11. An aerosol dispenser generally cylindrical valve comprising, a valve member having an upwardly opening socket comprising an annular wall having a generally planar upper rim surface at its upper end, resilient means normally urging said valve member upwardly to urge the rim surface into sealing engagement with the underside of an annular, apertured sealing gasket, a spray head having a depending tubular stem extending downwardly through said sealing gasket and into said valve member socket for rotation relative thereto, means in said socket

limiting rotation of said spray head stem therein to less than a full revolution, a vertically extending slot formed in the lower end of said tubular stem to provide an orifice opening through the wall of said tubular stem for communicating with interior portions of said socket, the lower end of said orifice opening being defined by an upper surface of an adjacent socket wall and said socket annular wall having an arcuate stepped notch formed in the inner wall portion thereof to define the lower end of the adjacently positioned stem orifice, the different stepped portions of said notch being progressively spaced greater distances below said wall upper rim surface, whereby relative rotation of said spray head between its limit positions vary the size of said orifice opening and thus controls the coarseness and fineness of the spray of pressurized product dispensed from the valve when it is opened by depressing the spray head thereof.

12. An aerosol dispenser generally cylindrical valve comprising, a valve member having an upwardly opening socket comprising an annular wall bounded by a generally planar upper rim surface at its upper end, resilient means normally urging said valve member upwardly to urge the rim surface into sealing engagement with the underside of an annular, apertured sealing gasket, a spray head having a tubular stem which is characterized by a depending skirt portion having an arcuate length of 180°, said spray head stem extending downwardly through said sealing gasket with said skirt portion being seated in said socket for rotation relative thereto, a stop member provided in the lower end of said valve member socket for cooperation with said skirt portion and having vertically disposed abutment surfaces spaced apart 60° and engageable by the opposite side edges of said skirt portion whereby to limit said rotation of said spray head stem in said socket to 120°, a vertically extending slot formed in the lower end of said tubular stem for communicating with interior portions of said socket, said slot being disposed diametrically opposite from the center of said skirt portion and being disposed adjacent interior portions of said socket annular wall, a stepped notch having an arcuate length of 90° formed in said adjacent inner wall, said notch extending progressively further from said rim surface and said notch extending arcuately towards said stop member from a point at one end of its deepest stepped portion spaced 45° from one abutment surface of said stop member, the arcuate path of movement of said orifice opening thus being between two limit positions one of which is in radial alignment with said deepest stepped portion of said notch and the other of which is in radial alignment with a non-notched portion of said inner wall, whereby relative rotation of said orifice opening between its limit positions serves to vary the size of said orifice opening to control the coarseness and fineness of the spray of pressurized product dispensed from the valve when it is opened by depressing the spray head thereof.

13. In an aerosol dispenser valve of the type having a valve member which is provided with an upwardly opening socket comprising an annular wall which is bounded by a generally planar upper rim surface at its upper end, resilient means normally urging said valve member upwardly to urge the rim surface into sealing engagement with the underside of an annular, apertured sealing gasket, a spring head having a depending tubular stem extending downwardly through said apertured sealing gasket and into said socket in said valve member and being rotatable relative to said valve member, and a vertical slot formed in the lower end of said tubular stem and disposed adjacent interior portions of said annular wall, the improvement which comprises, an arcuate, stepped notch provided in said adjacent interior portions of said annular wall for cooperation with said vertical slot to provide an orifice for the passage of pressurized product from interior portions of said socket to said spray head, and means in said valve member socket engageable by said spray head stem for limiting rotation of the orifice slot in said spray head between a first limit position in radial alignment with the deepest stepped portion of said notch and a second limit position in radial alignment with a non-notched interior portion of said wall at a point thereon spaced angularly from the shallowest stepped portion of said notch, whereby to vary the size of said orifice and control the coarseness and fineness of the product spray, the bottom surfaces of the different stepped portions of said notched wall portions defining lower ends for said orifice which are spaced different distances beneath its upper end.

14. In an aerosol dispenser valve of the type having a generally cylindrical valve member which is provided with an upwardly opening socket, said socket comprising an annular wall which is bounded by a generally planar upper rim surface at its upper end, resilient means normally urging said valve member upwardly to urge the rim surface into sealing engagement with the underside of an annular apertured sealing gasket, a spray head having a depending tubular stem extending downwardly through said apertured sealing gasket and into said socket in said valve member and being rotatable relative to said valve member, and a vertical slot formed in the lower end of said tubular stem, said annular wall having an interior portion in rotative engagement about said tubular stem, the improvement which comprises, the lower end of said spray head stem being provided with a depending skirt portion having an arcuate length of 180° and adapted to be seated in said valve member socket, the center of said skirt portion being disposed diametrically opposite from said vertical slot formed in said stem, a two-stepped notch formed in the inner portion of said annular wall of said valve member with each stepped notch wall portion having an arcuate length of 45° and each step, further, being progressively extended from said rim surface, and a stop member provided in the bottom of said valve member socket and having vertically disposed abutment surfaces spaced 60° apart and adapted to be engaged by the opposite ends of said skirt portion of said spray head stem whereby to limit rotation of said spray head stem in said socket to 120°, said stop member having one abutment surface radially aligned with the arcuate center of said stepped notch and extending arcuately past the shallowest stepped portion of said two-stepped notch with said stop member abutment surfaces being adapted to limit rotation of said orifice slot in said spray head between a first limit position in radial alignment with the deepest stepped portion of said two-stepped notch for a product spray of maximum coarseness and a second limit position in radial alignment with a non-notched portion of said wall at a point thereon spaced angularly from said shallowest stepped portion of said two-stepped notch for a product spray of minimum coarseness, the size of said orifice, therefore, being determined by the rotative position of said spray head relatively to said valve member whereby to selectively provide product sprays of maximum, medium and minimum coarseness.

**References Cited by the Examiner**

UNITED STATES PATENTS

| | | | |
|---|---|---|---|
| Re. 24,981 | 5/61 | Bretz | 239—573 |
| 2,757,964 | 8/56 | Both et al. | 222—394 |
| 2,797,965 | 7/57 | McKernan | 239—573 |
| 2,862,648 | 12/58 | Cooksley et al. | 239—573 |
| 2,913,154 | 11/59 | Kuffer | 222—394 |
| 2,997,243 | 8/61 | Kolb | 239—337 |
| 3,045,877 | 7/62 | Green | 239—337 |
| 3,074,601 | 1/63 | Kuffer | 239—337 |
| 3,098,589 | 7/63 | Graham | 239—337 |

RAPHAEL M. LUPO, *Primary Examiner.*

LOUIS J. DEMBO, EVERETT W. KIRBY, *Examiners.*