June 18, 1968 HUGH L. DRYDEN, DEPUTY ADMINISTRATOR OF THE NATIONAL AERONAUTICS AND SPACE ADMINISTRATION 3,388,590

CONNECTOR INTERNAL FORCE GAUGE

Filed Nov. 29, 1965

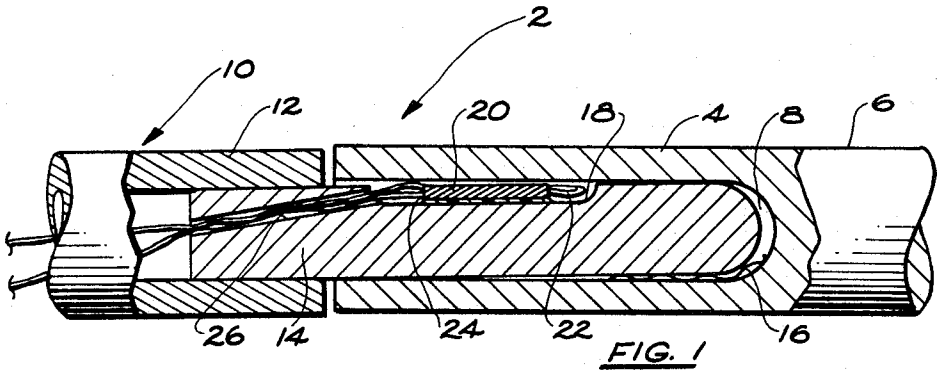

FIG. 1

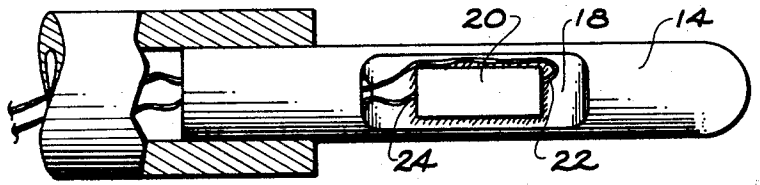

FIG. 2

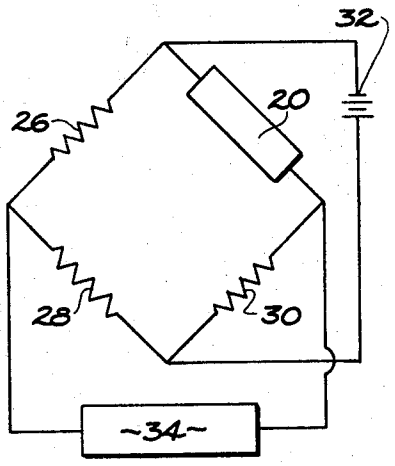

FIG. 3

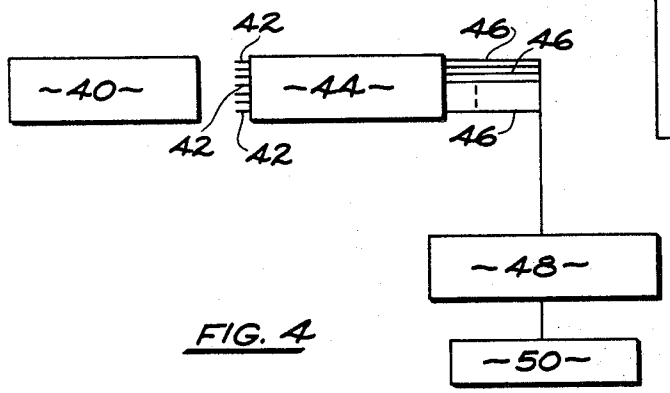

FIG. 4

INVENTOR.
WILLIAM W. BOND
BY O E Leslie & Co
ATTORNEY

United States Patent Office 3,388,590 Patented June 18, 1968

3,388,590

CONNECTOR INTERNAL FORCE GAUGE

Hugh L. Dryden, Deputy Administrator of the National Aeronautics and Space Administration, with respect to an invention of William W. Bond, Alhambra, Calif.

Filed Nov. 29, 1965, Ser. No. 510,475
6 Claims. (Cl. 73—88.5)

ABSTRACT OF THE DISCLOSURE

A strain sensing transducer is attached to a connector pin positioned within a female connector receptacle. The strain produced in the pin by biasing means in the wall of the receptacle is sensed by the transducer and the resulting electrical signal produced is a measure of the quality of the electrical connection between the pin and the receptacle.

Origin of the invention

The invention described herein was made in the performance of work under a NASA contract and is subject to the provisions of Section 305 of the National Aeronautics and Space Act of 1958, Public Law 84–568 (72 Stat. 435; USC 2457).

This invention relates to an electrical connection.

More particularly this invention relates to an electrical connection wherein means are provided to instantaneously and accurately determine the strength of the electrical connection.

The common electrical connectors such as found in the home consist of a prong which is inserted into a receptacle and is considered or is referred to as a male and female conneciton. Other types of connections include soldered connections and clamps. The prior art is replete with many examples of these connections.

This invention is directed to the plug-in socket or male and female connections in which the jack or male member is inserted into a receptacle or female member. Prior art examples have included a spring action in the female connector whereby a force is imparted on the male member thus ensuring a strong electrical connection. By strong electrical connection is meant that force between the metallic male and female members such that adequate conduction of electricity is assured. In other words, the voltage drop across the members should be at a minimum.

There have been problems with these types of connectors in the past and with the advent of modern space technology this problem is even more pronounced. This is particularly the case with low voltages where any substantial voltage drop at the connectors is undesirable. Since high reliability is demanded of space components and other electronic modules, it is mandatory that either completely reliable connectors be provided or that some means be utilized to determine which of the connections in an electronic module assembly are not strong enough so that they may be replaced prior to use. It is also a necessity that some means be provided in modern electronic circuits to immediately determine which connections are inadequate as between a male and female connector in a circuit so that the components can either be replaced or repaired.

This invention in its briefest aspect comprises a male and female electrical connection in which the female member has a bias means therein so as to provide a strong electrical connection as it is exerted against the male member. This provides a strong metal to metal contact to obviate high voltage drops. To determine this contact, a strain gauge or other transducer is placed on the male member with leads emanating therefrom which forms a part of a Wheatstone bridge arrangement with a voltage readout sent to an indicating means so that the strain of the male member is measured. The more the male member is biased by the biasing means in the female member, the stronger the electrical contact between the two. Therefore, this voltage readout is a direct indication of the strength of the electrical connection.

It is therefore an object of this invention to provide a means for immediately and accurately indicating the strength of an electrical connection.

It is another object of this invention to provide an improved method for testing the electrical contact between male and female members of an electrical connection.

Other and more particular objects of this invention will become apparent as this description proceeds taken in conjunction with the drawings in which:

FIGURE 1 is a view partially in cross section of an electrical connection according to this invention;

FIGURE 2 is a top view partially in cross section of the male member constructed according to this invention;

FIGURE 3 is a schematic of the Wheatstone bridge arrangement utilized in this invention; and

FIGURE 4 is a block diagram of an indicating means for determining the strength of a plurality of electrical connectors.

Referring to FIGURE 1 there is shown a male and female electrical connection according to this invention. This connection is indicated generally at **2** and includes a female member **4**. This female member leads from a cable not shown which is connected to the rear **6**. A hollow base or receptacle is formed at **8** for reception of the male member. This receptacle can be cylindrical or of other configurations including a plurality of prongs. The male member indicated generally at **10** includes a cylindrical member **12** to which is welded or securely attached a male pin member **14**. As thus far described, the combination shown is conventional. Attached within space **8** as by welding or the like is a biasing means **16** which in the form shown comprises a curved spring. Other bias means can be employed such as a "napkin ring" or retainer. When the male pin member **14** is inserted into the space **8**, spring **16** will be contacted which due to its inherent bias will tend to "bend" or otherwise strain pin member **14**. Spring member **16** is placed in receptacle **8** so as to ensure a strong electrical connection either through the spring itself or through direct contact with female member **6**. The greater the bias applied to pin member **14** the stronger the electrical connection. It is to determine the strength of this bias and therefore the soundness of the electrical connection to which this invention is directed.

Referring to FIGURE 2 there is shown the male member as viewed from the top. Pin **14** has a flattened area **18**. A transducer **20** which may comprise a silicon crystal strain gauge or other means is mounted on flat area **18**. This strain gauge can be of the piezo-electric type or it can be a simple elastic strain gauge known in the art. In any event, this type of gauge changes its electrical characteristic as strain is imparted thereto. Thus, should strain gauge **20** be shortened or lengthened the resistive properties thereof change which when utilized in a Wheatstone bridge arrangement known in the art can be utilized to measure strain. Strain gauge **20** can be mounted on flat area **18** by any conventional means such as an epoxy resin. In any event, strain gauge **20** is insulated from flat area **18** while structurally movable therewith as strain is imparted thereto.

At one end of strain gauge **20** is an electrical lead **22** and at the other end an electrical lead **24** is attached. These leads emanate through an aperture **26** (see FIGURE 1) and through cylinder **12** to the voltage readout device.

Referring to FIGURE 3, strain gauge **20** is shown schematically as it is placed in a Wheatstone bridge arrangement. Thus, resistors **26**, **28** and **30** which have been previously calibrated along with strain gauge **20** are located in the Wheatstone bridge circuit. When a voltage such as indicated by battery **32** is applied across the leads as shown, and no strain is imparted to the strain gauge element **20**, the voltage readout as received by indicating means **34** will be zero. When a strain is imparted to strain gauge element **20**, there will be a voltage readout which can be measured at **34** due to the change in resistance of strain gauge element **20**.

To test a plurality of connectors at the same time, it is within the scope of this invention to provide a sequential switching programmer which would immediately indicate which of a plurality of connectors are at fault in an electronic circuit. Thus, where there are a plurality of female receptacles in a single member such as indicated by female connection **40**, a plurality of male members indicated at **42** can be inserted therein to provide a plurality of electrical connections. Each of these male members **42** would lead to different portions of the circuit as desired. The common pin collector **44** then would have a plurality of leads indicated at **46** which can be led to a single sequencing switch system **48**. This can comprise a dial with a switching system to individually test each connection. Thus at a glance at readout console **50**, it can be determined immediately whether any of and which one of the male and female connections are weak.

In operation, male pin member **14** is inserted into space **8** against the bias of spring **16**. By proper connection in the Wheatstone bridge as shown in FIGURE 3, the strain of pin member **14** and hence the electrical connection between member **14** and female member **4** can be measured by determining the strain of pin member **14**. This is immediately apparent by reading the readout **34** or in the case of a plurality of connections by switching means **48** and readout **50**.

Thus it can be seen that by this invention, an immediate determination of electrical characteristics of connections can be made.

Having described this invention, it is to be understood that it is to be limited only by the scope of the claims appended hereto.

What is claimed is:

1. In an electrical connector having a male member and a female member wherein said female member has means associated therewith adapted to apply a bias to said male member whereby to strain said male member, that improvement which comprises:

a strain sensing transducer on said male member, said transducer being adapted to produce signals in response to strain induced in said male member by said bias;

indicator means adapted to receive said signals and to produce a readout thereof, said readout being a measure of the electrical connection between said male and female member.

2. In an electrical circuit wherein there are a plurality of electrical connections comprising a male member and a female member, that improvement which comprises:

at least one of said female members having biasing means;

a male member received in said female member whereby said male member is biased by said biasing means to produce a strain in said male member;

a transducer mounted on said male member and adapted to produce a signal in response to strain induced in said male member; and

whereby the force exerted between said members can be measured to indicate the strength of said electrical connection.

3. In an electrical circuit according to claim **2** wherein there is a plurality of said male and female members:

switching means adapted to selectively obtain the signals produced by each of said transducers; and

whereby the strength of each electrical connection can be determined.

4. In an electrical connector having a first conductor member contacting a second conductor member and means biasing the conductor members into engagement with each other to thereby strain said members, that improvement comprising:

a strain sensing transducer mounted on one of said members adapted to produce signals in response to strain induced in said one member by said biasing means;

electrical leads connected to said transducer for transmitting said signals to means for producing from the signals a measure of the quality of the electrical connection between said members.

5. In an electrical connector according to claim **4** wherein said first conductor member is a male pin and said second conductor member is a female receptacle which receives the pin, said transducer is mounted on said pin, and said biasing means is associated with the inner wall of the receptacle.

6. In an electrical connector according to claim **5** wherein said pin is formed with a flat area on one side surface and said transducer is bonded in insulated relation to the flat area of the pin;

said electrical leads are connected to opposite ends of the transducer and extend through an aperture in the rear of said pin; and

said biasing means is located on the side of the pin opposite from the transducer so that the transducer side of the pin is biased against the adjacent wall of the receptacle.

References Cited

UNITED STATES PATENTS

3,120,989	2/1964	Solorow et al.	339—256
3,188,860	6/1965	Roberts	73—88.5
3,197,697	7/1965	McCauley	73—8.85 XR
3,201,977	8/1965	Kutsay	73—88.5
3,327,270	6/1967	Garrison	73—88.5 XR

RICHARD C. QUEISSER, *Primary Examiner.*

CHARLES A. RUEHL, *Examiner.*